40 - YEARS - ANNIVERSARY

MIFAB®

MPB-2022-USA

2022

MPB USA CATALOG

SPECIFICATION DRAINAGE PRODUCTS

LIT-067

TERMS AND WARRANTIES

WHOLESALE DISCOUNT:

Contact MIFAB® or your local representative for your applicable discount structure.

FREIGHT ALLOWANCE: Ex Works, MIFAB's Chicago, Illinois Factory or Manufacturer Representative's warehouse with full motor freight allowed on shipments of $5,000.00 Net or more, within the continental U.S.A., except Alaska, Hawaii and Puerto Rico. MIFAB® reserves the right to choose the carrier and route of shipment. Alaska: Ex Works, Seattle, WA. Hawaii: Freight allowed on shipments of $5,000.00 or more only when shipped from West Coast, U.S. Puerto Rico: Ex Works, Miami, Florida. There is no allowance for United Parcel Service, Federal Express or Shipment by air service. Shipping dates are estimates and time of delivery is not the essence of the sale of the contract. Therefore, under no circumstances will MIFAB® have any responsibility on account of any delays in manufacture, transportation, or otherwise. Additional freight services such as construction site delivery, lift gate delivery service, re-consigned freight or notification charges, are not included in full freight allowance terms, and will result in additional freight charges.

QUOTATION TERMS: List Price and discount protected for 30 days from date issued by MIFAB®. Orders received within this period must be released for shipment within 30 days from date of purchase order, otherwise, prices will be those that are in effect at the time of shipment.

PAYMENT TERMS: Terms of payment are Net 30 days from the date of the invoice. All pricing in United States currency. The Buyer shall pay all sales, consumers, and / or any other applicable taxes. Past due accounts will be subject to a 2% per month service charge from the date of the invoice. If any proceedings be instructed by or against Buyer under any bankruptcy or insolvency law, or if Buyer shall fail to make timely payment on this or any other order, or if, in MIFAB's judgment, Buyer's financial situation justifies such action, MIFAB® may, at its election, require payment in advance or cancel the order as to any unshipped item and require payment of its reasonable cancellation charges. If Buyer delays completion of manufacture, MIFAB® may elect to require payment according to percentage of completion. Equipment held for Buyer shall be at Buyer's risk and expense. In all cases, regardless of partial payment, title to the Products shall remain with MIFAB® until payment for the Products (including any notes given therefore) has been made in full. Should legal action be necessary to enforce payment of an unpaid invoice, the Buyer will assume full responsibility for any court costs and reasonable attorney fees. All orders subject to credit check and approval prior to shipment. Confirmed irrevocable letter of credit or cash in advance of shipment is required for accounts without an established line of credit. Minimum invoice amount is $100.00. MIFAB® reserves the right to apply a minimum order charge to equal $100.00. MIFAB's Accounting Department must be notified of potential pricing errors within 30 days of the invoice date. Any terms and conditions stated on Buyer's orders which are inconsistent with MIFAB's quotation and Terms and Warranties shall be of no effect.

RETURNED GOODS RESTOCKING CHARGE: Standard product may be returned within a one year period only with written permission from MIFAB. All products in catalog are not considered Standard. Standard product to be determined by MIFAB®. Returned goods are subject to a 25% restocking charge, plus cost of reconditioning, if necessary, to make material saleable. Material must be returned to MIFAB® freight prepaid only after written permission from MIFAB® to accept the returned material. Buyer must provide copy of the original invoice on which the material was charged. The original outgoing freight cost to ship the order will be deducted from the credit. Credit allowance will be in the form of merchandise credit only-not cash credit which must be used within 12 months of the date of issue. The value of a return must total $100.00 to qualify for credit allowance. Galvanized and acid resistant epoxy coated material will be credited to value of cast iron, and chrome plated at value of nickel bronze. No credit will be allowed for auxiliary tappings, discontinued, or made to order items. Products designated non stock and / or that have been specially made are not subject to return or cancellation.

LIMITED WARRANTY: MIFAB® warrants each product against defects in material and workmanship for a period of one year from the date of original shipment. In the event of such defects within the warranty period, MIFAB® will, at its option, replace or recondition the product without charge. This shall constitute the exclusive remedy for breach of warranty, and MIFAB® shall not be responsible for any incidental or consequential damages, including, without limitation, damages or other costs resulting from labor charges, delays, vandalism, negligence, fouling caused by foreign material, damage from adverse water conditions, chemicals, or any other circumstances over which MIFAB® has no control. This warranty shall be invalidated by any abuse, misuse, misapplication or improper installation of the product.

MIFAB® MAKES NO OTHER WARRANTIES EXPRESSED OR IMPLIED AS PROVIDED IN THIS LIMITED WARRANTY.

ILLUSTRATIONS OR TYPICAL INSTALLATIONS: The typical installations for various products in each product section are intended to illustrate the products and their options. Under no circumstances are they to be construed as recommended installation procedures. Consult local codes and project specifications for proper installation instructions.

NOTE: Prices and terms are subject to change without notice and supersede all previous quotations. The right is reserved to change or modify product design or construction without prior notice and without incurring any obligation to make similar changes and modifications to product previouslyor subsequently sold. Contact MIFAB® for any clarification.

All sales subject to MIFAB's Terms and Warranties.

CONTENTS © MIFAB® INC. Copyright 2022

DESIGN AND DIMENSIONS ARE SUBJECT TO MODIFICATION. PRICES DO NOT INCLUDE APPLICABLE TAXES.

MIFAB®, Inc., 1321 West 119th Street, Chicago, Illinois 60643-5109, USA
Toll Free: 1-800-465-2736 • Fax: 1-773-341-3049
sales@mifab.com • Canada Toll Free: 1-800-387-3880

ORDER OF PRODUCTS IN PRICEBOOK

www.mifab.com

Floor & Area Drains, Trench Drains	Floor Sinks	Roof Drains & Downspout Nozzles	Cleanouts & Access Covers	Grease & Oil & Solids Interceptors	Closet & Fixture Carriers	Wall & Post Hydrants	Backwater Valves	Trap Seal Primers	Water Hammer Arrestors
					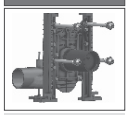				
Page 36	Page 97	Page 122	Page 168	Page 205	Page 234	Page 274	Page 284	Page 295	Page 313

PRODUCT BY CATEGORY

PARTS - PAGES 315-332

PRODUCT CATEGORY	MODEL NUMBER	PAGE
Access Doors	UA, etc...	188
Backwater Valves	BV1000 to BV1300	284-287
Cleanouts & Access Covers	C1000-R to UA	168-187
Fixture Carriers	MC-10 to MC-70	234-266
Floor and Area Drains	F1000 to F1920	36-88
Floor Sinks	FS1520 to FS2000	97-108
Hydrants	MHY-10 to MHY-95	274-283

CROSS REFERENCE - PAGES 333-365

PRODUCT CATEGORY	MODEL NUMBER	PAGE
Interceptors	MI-G to MI-G-LID	205-222
Miscellaneous Products	MI-850	288-290
No Hub Couplings	MI-QHUB, MI-QXHUB	109
Parts	All Products	315-332
Roof Drains	R1200-JD-G18H-W31P-165L	122-164
Trap Seal Primers	MR-500, etc...	295-308
Trench Drains	T1000 to T2000	90-92
Water Hammer Arrestors	MWH to WHB	313-314

OTHER MANUFACTURERS TO MIFAB® PRODUCT CROSS REFERENCE 333-365

ALPHABETICAL PRODUCT LISTING BY FUNCTION / APPLICATION

Access Covers, floor . . . 177
  Wall . . . 178-185, 188
Access Doors . . . 188
Access Housing . . . 178
Adapters . . . 288
Air Gap Fitting, Cast Iron and copper . . . 290
Backwater Valves . . . 284 - 287
Carriers, Closet . . . 234, 251, 264
  Auxiliary Inlet . . . 238, 240
  Cleanout Assembly . . . 231
  Extension . . . 239
  Hub and Spigot . 237, 240, 243, 245, 247, 249
  Long Barrel . . . 239, 240
  Prison Fixture . . . 251
  Residential . . . 250
  Vertical, Adj. . . . 242-245
  Vertical, Fixed . . . 246-249
  Cooler . . . 252, 254
  Lavatory . . . 256-264
  Residential, Closet . . . 250
  Shift and Lift . . . 230
  Sink . . . 253-264
  Urinal . . . 252, 253
Cleanouts, Carpet Marker . . . 169
  Covers . . . 177, 178
  Deck . . . 187
  Deep Seal Trap . . . 187
  Ferrule . . . 175
  Floor . . . 168-176
  Isolation Floor . . . 173-174
  Line . . . 180-186
  Stack . . . 184-186
  Tile and Terrazzo . . . 170-172, 177
  Top Set . . . 165
  Urinal . . . 179-185
  Utility . . . 176
  Wall . . . 178-185
Cross Reference Guides . . . 333-365
  JR Smith to MIFAB . . . 337-344
  JOSAM to MIFAB . . . 333-337
  Wade to MIFAB . . . 344-348
  Watts to MIFAB . . . 348-355
  Zurn to MIFAB . . . 355-365
Deep Seal Traps . . . 289
Downspout Boots . . . 152, 153
Downspout Nozzles . . . 156-158
Drains, Area . . . 56-79
  All Star Cover . . . 22
  Balcony . . . 150-151
  Blood . . . 79
  Body Assemblies . . . 23, 24, 315, 316
  Strainers, Adjustable . . . 50, 51, 318, 319
  Catch Basin . . . 76
  Deep Sump . . . 59,63,64,66,70,72,73
  Ductile Iron Top Assemblies . . . 320
  Floor . . . 36-56
  Flushing Rim . . . 80
  Funnel . . . 39
  Garbage Can Wash . . . 64
  Green . . . 159-164
  Gutter . . . 81
  Heavy Duty . . . 76-77
  Hopper . . . 84
  Indirect Waste . . . 38-40, 81, 84
  Integral Trap . . . 52, 53, 289
  Isolation, Floor . . . 78
  Ligature Resistant . . . 89
  Multi Inlet . . . 54
  Open Sight, Drip . . . 84
  Overflow . . . 46, 126
  Parking Area . . . 74, 75, 125, 133, 134, 141
  Pit . . . 285
  Planting Area . . . 82-84
  Podium . . . 86-88
  Prison Cell . . . 53
  Promenade Top . . . 124, 125, 133, 134, 141
  Roof . . . 122-164
  Round Area . . . 56-66
  Rectangular . . . 43, 81
  Scupper . . . 148, 149
  Shower . . . 36-38, 43, 55
  Side Outlet . . . 36-49, 126, 138
  Siphonic . . . 144-147
  Square Area . . . 67-73
  Stabilizing Plates . . . 85-89, 107
  Top Set . . . 36
  Trench . . . 90-92
  Utility . . . 55
  Wood Floor . . . 55
Eccentric Reducer Bushing . . . 288
Elbow Adapter . . . 288
Expansion Joints . . . 155
Fresh Air Inlet . . . 290
Hydrants, Boxes . . . 278
  Ground . . . 280
  Hot and Cold . . . 276
  Moderate Climate . . . 275, 277
  Narrow Wall . . . 277
  Non Freeze . . . 274, 276, 280
  Parts . . . 282
  Post . . . 281
  Roof . . . 279
Interceptors, Automatic Recovery . . . 218
  Bolt On Extensions . . . 222
  Cover Shrouds . . . 209
  Draw Off . . . 207, 208
  Electronic . . . 219-221
  Grease . . . 205-208, 218, 219
  Fish Scale, Oil, Solids . . . 212, 213, 216-217
  Hair . . . 212
  Heliport Fuel . . . 215
  Lint . . . 216
  Oil . . . 212, 213, 216-217
  Oil w/integral hold. Tank . . . 211, 221
  Parts . . . 325, 326
  Plastic . . . 190-195
  Sand . . . 214
  Sand / Oil . . . 215
  Sediment . . . 212-214
Self Cleaning . . . 189
No Hub Couplings . . . 109
Parapet Scupper Sleeve . . . 153
Parts and Accessories . . . 315-332
P-Traps . . . 289, 307-308
Replacement Grates and Covers . . . 319, 324
Sanitary Floor Area and Indirect . . . 97-108
Waste Drains (Floor Sinks) . . . 97-108
Stainless Steel Cleanouts . . . 168-175
Stainless Steel Floor Drains . . . 36-48
Trap Seal Primers
  Continuous Flow, Pressure Drop . . . 295-296
  Electronic . . . 297-306
  MI-GARD . . . 309-311
  P-Trap . . . 308
  Tailpiece . . . 307
Universal Membrane Clamp . . . 154
Vandal Proof Screwdrivers . . . 319
Vent Cap, Roof . . . 155
Waste Funnel, Indirect Waste . . . 81
Water Hammer Arrestors,
  Bellows, Piston . . . 313-314
Water Supply Control Box . . . 80

UA (ACCESS DOORS)

(see page 188)

MI-QHUB + MI-QXHUB, QUICK HUB (NO HUB COUPLINGS)

(see page 109)

MIFAB's pressure drop activated Trap Seal Primers, Access Doors, No Hub Couplings and residential Water Hammer Arrestors are priced in their own product price guides.

MIFAB MODEL NUMBER INDEX

BACKWATER VALVES

MODEL	PAGE
BV1000	pg. 284
BV1200-R	pg. 284
BV1210	pg. 285
BV1250	pg. 285
BV1260	pg. 285
BV1280	pg. 286
BV1290	pg. 286
BV1300	pg. 287

CLEANOUTS

MODEL	PAGE
C1000-R	pg. 168
C1100-R	pg. 168
C1100-RC	pg. 169
C1100-RFC	pg. 169
C1100-S	pg. 170
C1100-6S	pg. 170
C1100-T	pg. 170
C1100-TOS	pg. 165
C1100-TS	pg. 171
C1100-UR	pg. 171
C1100-US	pg. 172
C1100-XR	pg. 172
C1100-XS	pg. 173
C1200-C-R	pg. 173
C1200-C	pg. 174
C1220	pg. 175
C1230	pg. 176
C1230-WF	pg. 176
C1300-R	pg. 177
C1300-S	pg. 177
C1300-UR	pg. 177
C1300-US	pg. 177
C1310	pg. 177
C1300-MF	pg. 178
C1400-R	pg. 178
C1400-S	pg. 178
C1400-RD	pg. 179
C1430	pg. 179
C1430-RD	pg. 179
C1440	pg. 180
C1440-R	pg. 180
C1440-RD	pg. 181
C1440-S	pg. 181
C1450	pg. 182
C1450-R	pg. 182
C1450-RD	pg. 183
C1450-S	pg. 183
C1460	pg. 184
C1460-R	pg. 184
C1460-RD	pg. 185
C1460-S	pg. 185
C1470	pg. 186
C1500	pg. 187
C1600	pg. 187

DEEP SEAL TRAPS

MODEL	PAGE
MI-940	pg. 289
MI-950	pg. 289
MI-950-F	pg. 289

FIXTURE CARRIERS

MODEL	PAGE
MC-10-CO	pg. 231
MC-10-3NH	pg. 234
MC-10	pg. 235
MC-10-HS	pg. 237
MC-10-HD-750	pg. 235
MC-10-HDX	pg. 241
MC-10-EXT	pg. 236
MC-10-27	pg. 238
MC-10-27-37	pg. 239
MC-10-27-37-HS	pg. 240
MC-12	pg. 242
MC-12-HS	pg. 243
MC-13	pg. 244
MC-13-HS	pg. 245
MC-14	pg. 246
MC-14-HS	pg. 247
MC-15	pg. 248
MC-15-HS	pg. 249
MC-21	pg. 250
MC-22	pg. 250
MC-24	pg. 250
MC-25	pg. 250
MC-26	pg. 251
MC-27	pg. 251
MC-28	pg. 251
MC-31	pg. 252
MC-32	pg. 252
MC-33	pg. 253
MC-34	pg. 253
MC-35	pg. 254
MC-36	pg. 254
MC-37	pg. 254
MC-38	pg. 254
MC-39	pg. 254
MC-40	pg. 255
MC-41	pg. 231, 256
MC-41-R	pg. 257
MC-41-TR	pg. 258
MC-41D	pg. 257
MC-41D-R	pg. 259
MC-42	pg. 259
MC-42-R	pg. 260
MC-42D	pg. 260
MC-42D-R	pg. 261
MC-51	pg. 261
MC-51-LP	pg. 262
MC-53	pg. 262
MC-54	pg. 254
MC-55	pg. 254
MC-56	pg. 264
MC-60	pg. 264
MC-61	pg. 264
MC-62	pg. 264

FLOOR DRAINS

MODEL	PAGE
F1000	pg. 37
F1000-C	pg. 37
F1100	pg. 37
F1100-C	pg. 37
F1100-AS	pg. 38
F1100-C-AS	pg. 38
F1100-DD	pg. 38
F1100-C-DD	pg. 38
F1100-EF	pg. 39
F1100-C-EF	pg. 39
F1100-EG	pg. 39
F1100-C-EG	pg. 39
F1100-ER	pg. 40
F1100-C-ER	pg. 40
F1100-FC	pg. 40
F1100-C-FC	pg. 40
F1100-FT	pg. 41
F1100-C-FT	pg. 41
F1100-HG	pg. 41
F1100-C-HG	pg. 41
F1100-K	pg. 42
F1100-C-K	pg. 42
F1000-C-LR	pg. 89
F1100-N	pg. 42
F1100-C-N	pg. 42
F1100-RS	pg. 43
F1100-C-RS	pg. 43
F1100-S	pg. 43
F1100-C-S	pg. 43
F1000-C-S-LR	pg. 89
F1100-SD	pg. 44
F1100-C-SD	pg. 44
F1100-SHG	pg. 44
F1100-C-SHG	pg. 44
F1100-T	pg. 45
F1100-C-T	pg. 45
F1100-TS	pg. 36
F1100-VD	pg. 45
F1100-C-VD	pg. 45
F1100-W(D)	pg. 46
F1100-C-W(D)	pg. 46
F1100-X	pg. 46
F1100-C-X	pg. 46
F1100-XS	pg. 47
F1100-C-XS	pg. 47
F1100-Z	pg. 47
F1100-C-Z	pg. 47
F1100-ZS	pg. 48
F1100-C-ZS	pg. 48
F1100-90	pg. 48
F1100-C-90	pg. 48
F1120	pg. 52
F1120-C	pg. 52
F1130C	pg. 52
F1140C	pg. 53
F1160	pg. 53
F1160-C	pg. 53
F1170	pg. 54
F1170-C	pg. 54
F1170-SD	pg. 54
F1170-C-SD	pg. 54
F1212TC	pg. 55
F1220	pg. 55
F1230	pg. 55
F1240	pg. 56
F1300	pg. 56
F1300-C	pg. 56
F1320	pg. 57
F1320-C	pg. 57
F1320-TFB	pg. 58
F1320-C-TFB	pg. 58
F1330C	pg. 59
F1340	pg. 60
F1340-C	pg. 60
F1340-TFB	pg. 61
F1340-C-TFB	pg. 61
F1340-Y-Q	pg. 69
F1350	pg. 63
F1350-C	pg. 63
F1350-Y-36	pg. 64
F1350-Y-36-C	pg. 64
F1360	pg. 65
F1360-C	pg. 65
F1370	pg. 66
F1370-C	pg. 66
F1420	pg. 67
F1420-C	pg. 67
F1430C	pg. 67
F1440	pg. 68
F1440-C	pg. 68
F1440-Y-Q	pg. 69
F1450	pg. 70
F1450-C	pg. 70
F1460	pg. 71
F1460-C	pg. 71
F1470	pg. 72
F1470-C	pg. 72
F1480	pg. 73
F1480-FL	pg. 73
F1490	pg. 73
F1490-FL	pg. 73
F1510	pg. 74
F1530	pg. 74
F1540	pg. 75
F1550	pg. 75
F1560	pg. 76
F1570	pg. 76
F1580	pg. 77
F1590	pg. 77
F1590-90	pg. 77
F1600	pg. 78
F1600-C	pg. 78
F1620	pg. 78
F1620-C	pg. 78
F1640	pg. 79
F1650	pg. 80
F1650-G	pg. 80
F1660	pg. 80
F1670	pg. 80
F1760-FL	pg. 81
F1780	pg. 81
F1790	pg. 81
F1810	pg. 82
F1820	pg. 82
F1830-P	pg. 83
F1830-PL	pg. 83
F1840	pg. 84
F1860	pg. 84
F1870	pg. 84
F1880	pg. 84
F1890	pg. 84
F1900	pg. 85
F1910	pg. 85
F1920	pg. 85
Podium Drains	pgs. 86-88

FLOOR SINKS

MODEL	PAGE
FS1520	pg. 97
FS1520-FL	pg. 97
FS1530	pg. 98
FS1530-FL	pg. 98
FS1720	pg. 99
FS1720-FL	pg. 99
FS1730	pg. 100
FS1730-FL	pg. 100
FS1740	pg. 101
FS1740-FL	pg. 101
FS1750	pg. 102
FS1750-FL	pg. 102
FS1760	pg. 103
FS1760-FL	pg. 103
FS1770	pg. 104
FS1770-FL	pg. 104
FS1790	pg. 105
FS1910-FL	pg. 106
FS1920-FL	pg. 106
FS1930-FL	pg. 106
FS1940-FL	pg. 106
FS1950	pg. 107
FS1959	pg. 107
FS1960	pg. 107
FS1970	pg. 108
FS1980	pg. 108
FS1990	pg. 108
FS2000	pg. 108

HYDRANTS

MODEL	PAGE
MHY-10	pg. 274
MHY-15	pg. 274
MHY-16	pg. 274
MHY-20	pg. 274
MHY-25	pg. 274
MHY-26	pg. 274
MHY-30	pg. 275
MHY-35	pg. 275
MHY-40	pg. 276
MHY-45	pg. 276
MHY-50	pg. 277
MHY-55	pg. 277
MHY-58	pg. 279
MHY-60	pg. 280
MHY-61	pg. 280
MHY-65	pg. 281
MHY-66	pg. 281
MHY-68	pg. 281
MHY-90	pg. 282
MHY-92	pg. 283
MHY-95	pg. 283
MHY-CIA-18-A	pg. 282

INTERCEPTORS

MODEL	PAGE
MI-CS	pg. 209
MI-CSD	pg. 209
MI-E-G	pg. 219
MI-E-O	pg. 220
MI-E-O-HU	pg. 221
MI-FISH	pg. 216
MI-G	pg. 205
MI-G-AD	pg. 218
MI-G-BO	pg. 222

MIFAB MODEL NUMBER INDEX

INTERCEPTORS CONT.

MODEL	PAGE
MI-G-L	pg. 205
MI-G-LID	pg. 222
Lil Max	pg. 190-191
MI-G-SD	pg. 207
MI-G-SDH	pg. 208
MI-G-SS	pg. 207
MI-HAIR	pg. 212
MI-HEL	pg. 215
MI-LINT	pg. 216
MI-O	pg. 210
MI-O-BO	pg. 222
MI-O-HU	pg. 211
MI-OS	pg. 212
MI-RICE	pg. 217
MI-SAND	pg. 214
MI-SAND/OIL	pg. 215
MI-SD	pg. 214
MI-SOLID-S	pg. 212
MI-SOLID-S-30	pg. 212
MI-SOLID-M	pg. 212
MI-SOLID-L	pg. 212
MI-SOLID-LB	pg. 212
MI-SOLID-SA	pg. 213
MI-SOLID-TA	pg. 213
XL-MI-G	pg. 206
XL-MI-G-BO	pg. 222
Big Max	192-193
SuperMax	pgs. 194-195

MISCELLANEOUS

MODEL	PAGE
MI-800	pg. 288
MI-830	pg. 288
MI-850	pg. 288
MI-860	pg. 288
MI-940	pg. 289
MI-950	pg. 289
MI-950-F	pg. 289
MI-CAG	pg. 290
MI-GAP-NPB	pg. 290
MI-GRILL	pg. 290

NO HUB COUPLINGS

MODEL	PAGE
MI-QHUB	pg. 109
MI-QXHUB	pg. 109

ROOF DRAINS

MODEL	PAGE
R1100	pg. 122
R1100-EU	pg. 122
R1100-F	pg. 123
R1100-G	pg. 123
R1100-JC	pg. 124
R1100-PJ	pg. 124
R1100-PR	pg. 124
R1100-RS	pg. 125
R1100-90	pg. 126
R1150	pg. 126
R1200	pg. 127
R1200-BUV	pg. 128
R1200-EU	pg. 128
R1200-ES	pg. 129
R1200-F	pg. 130
R1200-G	pg. 130
R1200-HC	pg. 131
R1200-JC	pg. 131
R1200-JD	pg. 132
R1200-PR	pg. 131
R1200-PR15	pg. 131
R1200-RB	pg. 134
R1200-RB15	pg. 134
R1200-R	pg. 135
R1200-R-SR	pg. 146
R1200-RS	pg. 135
R1200-SO	pg. 136
R1200-SR	pg. 146
R1200-W	pg. 137
R1200-Z	pg. 137
R1200-90	pg. 138
R1200-RG	pg. 139
R1200-R-RG	pg. 139
R1270-RG	pg. 139
R1220	pg. 140
R1220-EU	pg. 140
R1220-G	pg. 140
R1220-JC	pg. 141
R1220-PR	pg. 141
R1220-R	pg. 141
R1250	pg. 142
R1260	pg. 142
R1270	pg. 143
R1300T	pg. 148
R1310	pg. 148
R1320T	pg. 149
R1330	pg. 149
R1400	pg. 150
R1410	pg. 151
R1420	pg. 151
R1510	pg. 152
R1520	pg. 152
R1530	pg. 153
R1640	pg. 153
R1810	pg. 154
R1820	pg. 154
R1850	pg. 154
R1900	pg. 155
R1930	pg. 155
R1940	pg. 156
R1940-SJ	pg. 157
R1960	pg. 158
R1100-28-G8H	pg. 159
R1100-28-G8H-AI	pg. 159
R1200-JD-M-G5H	pg. 160
R1200-JD-M-G8H-AI	pg. 160
R1200-JD-M-G5H-W31H4	pg. 161
R1200-JD-W31P6L-WD	pg. 161
R1200-JD-W31P24L-R1404T-1-83	pg. 162
R1200-JD-W31P24L-R1104	pg. 162
R1200-JD-W31P24L-R1204-JD	pg. 163
R1200-JD-W31P24L-F1444	pg. 163
R1200-JD-W30	pg. 164
R1200-JD-G18H-W31P-16.5L	pg. 164

TRAP SEAL PRIMERS

MODEL	PAGE
MI-100	pg. 298-306
MI-200	pg. 300
MI-300	pg. 300-302
MI-600	pg. 307
MI-600-50	pg. 307
MI-700	pg. 308
MI-730	pg. 307
MI-750	pg. 308
M-500-NPB	pg. 295
MI-DU	pg. 296
MI-TSP-NPB	pg. 296
MI-GARD	pg. 309-310

TRENCH DRAINS

MODEL	PAGE
T1000	pg. 90
T1000-F	pg. 90
T1100	pg. 90
T1100-F	pg. 90
T1150	pg. 90
T1150-F	pg. 90
T1200	pg. 90
T1200-F	pg. 90
T1320-FL	pg. 91
T1350-FL	pg. 91

WATER HAMMER ARRESTORS

MODEL	PAGE
MWH	pg. 313
WHB	pg. 314

MIFAB'S PRODUCTS COMPLY WITH THE FOLLOWING ANSI/ASME AND ASSE STANDARDS:

A112.1.2-2012	Air Gaps in Plumbing Systems (for Plumbing Fixtures and Water-Connected Receptors)	MI-CAG Series, MI-GAP (pg.297)
A112.1.3-2000	Air Gap Fittings For Use With Plumbing Fixtures, Appliances, and Appurtenances	MI-CAG Series, MI-GAP (pg.290)
A112.14.1-2003	Backwater Valves	BV Series (pg.284-287)
A112.36.2M-1991 (R 2017)	Cleanouts	C Series (pg.168-187)
A112.6.1M-1997	Floor-Affixed Supports for Off-The-Floor Plumbing Fixtures for Public Use	MC Series (pg. 234 - 266)
A112.6.3-2001	Floor and Trench Drains	F and T Series (pg.36-38)
A112.6.7-2010	Floor Sinks (Sanitary)	FS Series (pg.97-108)
PDI G-101, A112.14.3-2000	Grease Interceptors	MI-G Series (pg.205)
A112.14.4-2001	Grease Removal Devices	MI-G-AD Series (pg.218)
A112.6.4-2003	Roof, Deck, and Balcony Drains	R Series (pg.122-164)
A112.6.9-2005	Roof Drains, Siphonic	R1200-SR Series (pg.144-147)
ASTM C1277-12	Shielded Couplings Joining Hubless Cast Iron Soil Pipe and Fittings	MI-QHUB Series (pg.109)
ASTM C1540-11	Shielded Couplings (Heavy Duty) Joining Hubless Cast Iron Soil Pipe and Fittings	MI-QXHUB Series (pg.109)
ASTM C564-09a	Specification for Rubber Gaskets for Cast Iron Soil Pipe and Fittings	MI-QHUB and MI-QXHUB Series (pg.109)
A112.3.1-2007	Stainless Steel Drainage Systems for Sanitary, DWV, Storm and Vacuum Applications, Above and Below Ground	See TDSS Catalog
ASSE 1018	Trap Seal Primer Valves, Water Supply Fed	MI-TSP-NPB, MR-500-NPB, M1-500-NPB, M2-500-NPB (pg.295)
ASSE 1044	Trap Seal Primer Devices - Drainage Types and Electronic Design Types	MI-100, 200 and 300 Series (pg.298-306)
ASSE 1011	Vacuum Breakers (Hose Connection)	MHY-30, 50, 90 Series (pg.272, 274, 298-306)
ASSE 1019	Vacuum Breaker Wall Hydrants, Freeze Resistant, Automatic Draining Type	MHY 10, 20, 40 Series (pg.275, 277-282)
ASSE 1010	Water Hammer Arrestors	MWH Series (pg.313)
PDI-WH 201	Water Hammer Arrestors	WHB Series (pg.314)

PICTORIAL INDEX

F1100-C-TS TOP SET FLOOR DRAIN.	F1000-C HEAVY DUTY SS FLOOR DRAIN.	F1100-C NB FLOOR DRAIN.	F1100-C-AS	F1100-C-DD	F1100-C-EF	F1100-C-EG
PAGE 36	PAGE 37	PAGE 37	PAGE 38	PAGE 38	PAGE 39	PAGE 39

F1100-C-ER	F1100-C-FC	F1100-C-FT	F1100-C-HG	F1100-C-K	F1000-C-LR	F1000-C-S-LR	F1100-C-N	F1100-C-RS
PAGE 40	PAGE 40	PAGE 41	PAGE 41	PAGE 42	PAGE 89	PAGE 89	PAGE 42	PAGE 43

F1100-C-S	F1100-C-SD	F1100-C-SHG	F1100-C-T	F1100-C-VD	F1100-C-W(D)	F1100-C-X
PAGE 43	PAGE 44	PAGE 44	PAGE 45	PAGE 45	PAGE 46	PAGE 46

F1100-C-XS	F1100-C-Z	F1100-C-ZS	F1100-C-90	F1100-C SERIES OPTIONS	ADJUSTABLE STRAINERS	F1120-C
PAGE 47	PAGE 47	PAGE 48	PAGE 48	PAGE 49	PAGE 50 & 51	PAGE 52

F1130C	F1140C	F1160-C	F1170-C	F1170-C-SD	F1210C	F1220
PAGE 52	PAGE 53	PAGE 53	PAGE 54	PAGE 54	PAGE 55	PAGE 55

F1230 F1230-WF	F1240	F1300-C	F1320-C	F1320-C-TFB	F1330C	F1340
PAGE 55	PAGE 56	PAGE 56	PAGE 57	PAGE 58	PAGE 59	PAGE 60

Design and dimensions are subject to modification. Prices do not include applicable taxes. Visit **www.mifab.com** for the most recent product information.

MIFAB®, Inc., 1321 West 119th Street, Chicago, Illinois 60643-5109, USA
Toll Free: 1-800-465-2736 • Fax: 1-773-341-3049
sales@mifab.com • Canada Toll Free: 1-800-387-3880

All sales subject to MIFAB's® Terms & Warranties. Please refer to inside front cover.

PICTORIAL INDEX

F1340-TFB	F1340-Y-Q	F1350	F1350-Y-36	F1360	F1370
	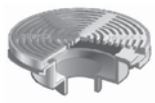			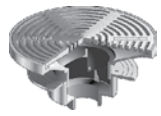	
PAGE 61	PAGE 62	PAGE 63	PAGE 64	PAGE 65	PAGE 66

F1420-C	F1430C	F1440	F1440-Y-Q	F1450	F1460	F1470
		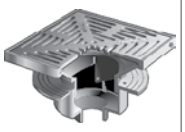	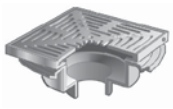			
PAGE 67	PAGE 67	PAGE 68	PAGE 69	PAGE 70	PAGE 71	PAGE 72

F1480(-FL)	F1490(-FL)	MIFAB BODY DIMENSIONS	F1510	F1530	F1540	F1550
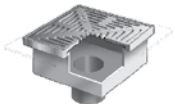	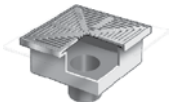				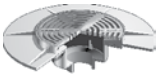	
PAGE 73	PAGE 73	PAGE 23, 24	PAGE 74	PAGE 74	PAGE 75	PAGE 75

F1560	F1570	F1580	F1590	F1590-90	F1600-C	F1620-C
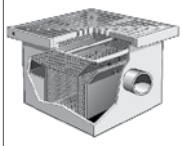	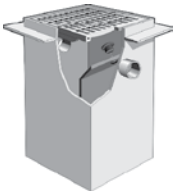			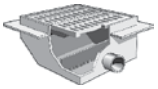	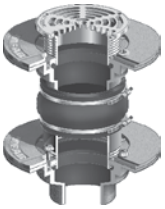	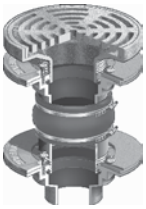
PAGE 76	PAGE 76	PAGE 77	PAGE 77	PAGE 77	PAGE 78	PAGE 78

F1640	F1650 F1650-G	F1660	F1670	F1760-FL	F1780	F1790
PAGE 79	PAGE 80	PAGE 80	PAGE 80	PAGE 81	PAGE 81	PAGE 81

F1810	F1820	F1830-P F1830-PL	F1840	F1860	F1870	F1880 F1890
	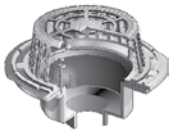			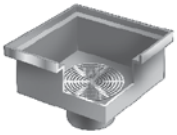		
PAGE 82	PAGE 82	PAGE 83	PAGE 84	PAGE 84	PAGE 84	PAGE 84

PICTORIAL INDEX

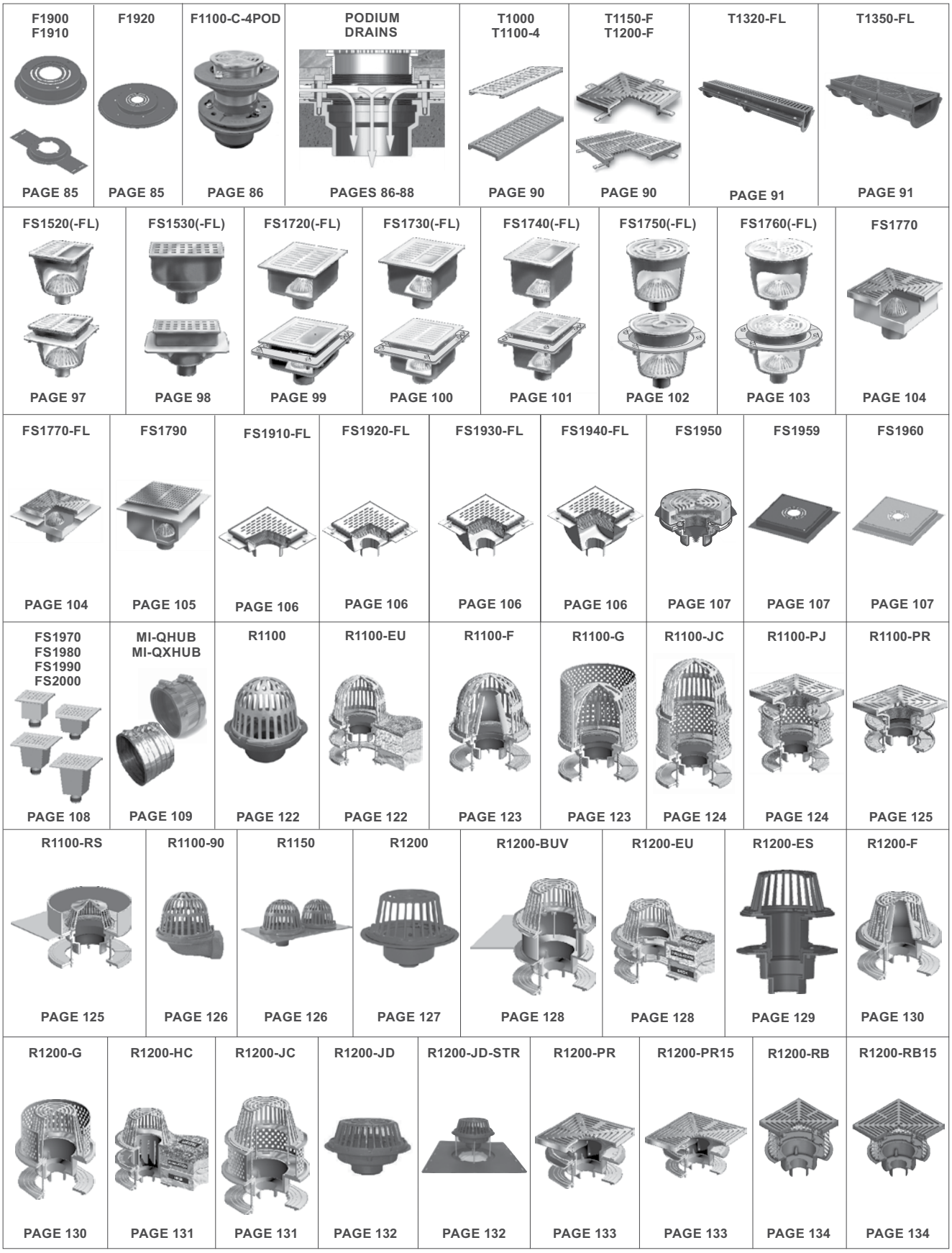

Design and dimensions are subject to modification. Prices do not include applicable taxes. Visit **www.mifab.com** for the most recent product information.

MIFAB®, Inc., 1321 West 119th Street, Chicago, Illinois 60643-5109, USA
Toll Free: 1-800-465-2736 • Fax: 1-773-341-3049
sales@mifab.com • Canada Toll Free: 1-800-387-3880

All sales subject to MIFAB's® Terms & Warranties. Please refer to inside front cover.

PICTORIAL INDEX

R1200-R	R1200-RS	R1200-SO	R1200-W	R1200-Z	R1200-90	R1200-RG	R1200-R-RG
PAGE 135	PAGE 135	PAGE 136	PAGE 137	PAGE 137	PAGE 138	PAGE 139	PAGE 139

R1270-RG	R1220	R1220-EU	R1220-G	R1220-JC	R1220-PR	R1220-R
					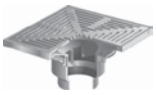	
PAGE 139	PAGE 140	PAGE 140	PAGE 140	PAGE 141	PAGE 141	PAGE 141

R1220-RS	R1250	R1260	R1270	R1300T	R1310	R1320T	R1330
PAGE 141	PAGE 142	PAGE 142	PAGE 143	PAGE 148	PAGE 148	PAGE 149	PAGE 149

R1400	R1410	R1420	R1510	R1520	R1530	R1640
PAGE 150	PAGE 151	PAGE 151	PAGE 152	PAGE 152	PAGE 153	PAGE 153

R1810	R1820	R1850	R1900	R1930	R1940	R1940-SJ	R1960
						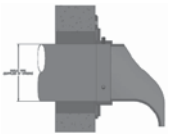	
PAGE 154	PAGE 154	PAGE 154	PAGE 155	PAGE 155	PAGE 156	PAGE 157	PAGE 158

R1960-F	GREEN ROOF DRAINS	C1000-R	C1100-R	C1100-RC	C1100-RFC	C1100-S	C1100-T
	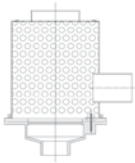						
PAGE 158	PAGES 159-164	PAGE 168	PAGE 168	PAGE 169	PAGE 169	PAGE 170	PAGE 170

PICTORIAL INDEX

C1100-TS	C1100-UR	C1100-US	C1100-XR	C1100-XS	C1200-C-R	C1222,3,4
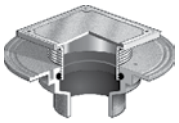		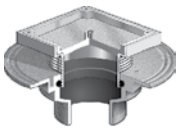				
PAGE 171	PAGE 171	PAGE 172	PAGE 172	PAGE 173	PAGES 173-174	PAGE 175
C1226,8	C1230 C1230-WF	C1300-R C1300-S	C1300-UR C1300-US	C1310	C1300-MF	C1400
			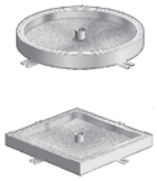			
PAGE 175	PAGE 176	PAGE 177	PAGE 177	PAGE 177	PAGE 178	PAGE 178
C1400-RD	C1430 C1430-RD	C1440, R, RD, S	C1450, R, RD, S	C1460,R, RD, S	C1474X C1476X	C1500
						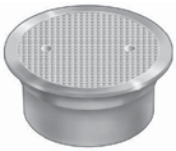
PAGE 179	PAGE 179	PAGE 180-181	PAGE 182-183	PAGE 184-185	PAGE 186	PAGE 187
C1600	ACCESS DOORS	LIL MAX BIG MAX SUPERMAX	MI-G	MI-G-L	XL-MI-G	MI-G-SD	MI-G-SDH MI-G-L-SDH
					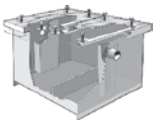		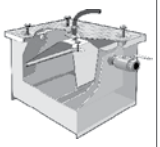
PAGE 187	PAGE 188	PAGES 190-195	PAGE 205	PAGE 205	PAGE 206	PAGE 207	PAGE 208
MI-CS	MI-CSD	MI-O	MI-O-HU	MI-OS	MI-HAIR	MI-SOLID
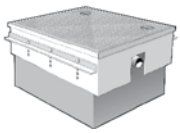	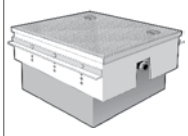	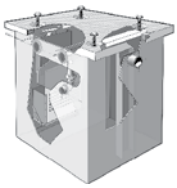	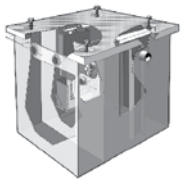	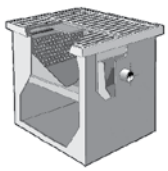		
PAGE 209	PAGE 209	PAGE 210	PAGE 211	PAGE 212	PAGE 212	PAGE 212
MI-SOLID-SA	MI-SOLID-TA	MI-SAND	MI-SD	MI-HEL	MI-SAND/OIL	MI-FISH
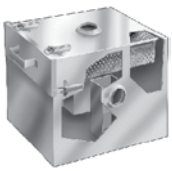		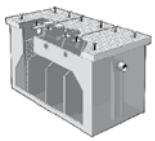	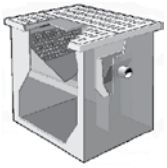	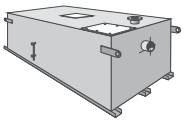	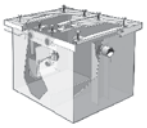	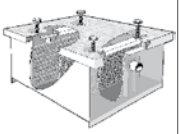
PAGE 213	PAGE 213	PAGE 214	PAGE 214	PAGE 215	PAGE 215	PAGE 216

Design and dimensions are subject to modification. Prices do not include applicable taxes. Visit **www.mifab.com** for the most recent product information.

MIFAB®, Inc., 1321 West 119th Street, Chicago, Illinois 60643-5109, USA
Toll Free: 1-800-465-2736 • Fax: 1-773-341-3049
sales@mifab.com • Canada Toll Free: 1-800-387-3880

All sales subject to MIFAB's® Terms & Warranties. Please refer to inside front cover.

PICTORIAL INDEX

MI-LINT	MI-RICE	MI-G-AD	MI-E-G	MI-E-O	MI-E-O-HU	MI-G-BO	XL-MI-O-BO
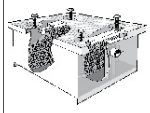	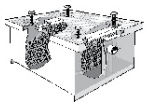	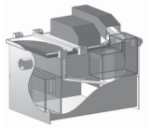	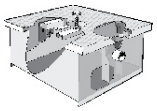	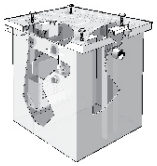	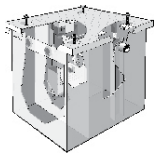		
PAGE 216	PAGE 217	PAGE 218	PAGE 219	PAGE 220	PAGE 221	PAGE 222	PAGE 222

MI-O-BO	MI-G-LID	SHIFT AND LIFT	MC-10-CO	MC-10-3NH	MC-10 MC-10D	MC-10-EXT MC-10D-EXT	MC-10-HS	MC-10-27 MC-10D-27
		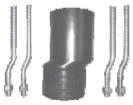	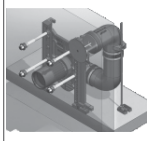	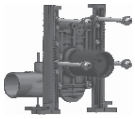	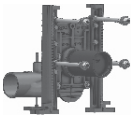	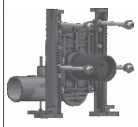	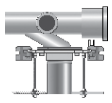	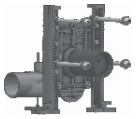
PAGE 222	PAGE 222	PAGE 230	PAGE 231	PAGE 234	PAGE 235	PAGE 236	PAGE 237	PAGE 238

MC-10D-27-37	MC-10-27-37-HS	MC-10-HDX	MC-12	MC-12-HS	MC-13 MC-13D	MC-13-HS	MC-14	MC-14-HS	MC-15
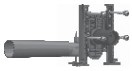		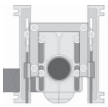	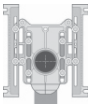		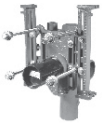			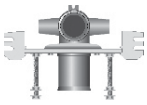	
PAGE 239	PAGE 240	PAGE 241	PAGE 242	PAGE 243	PAGE 244	PAGE 245	PAGE 246	PAGE 247	PAGE 248

MC-15-HS	MC-21	MC-24	MC-25	MC-26	MC-27	MC-28	MC-31
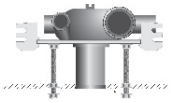	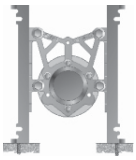		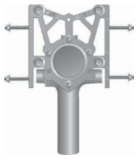				
PAGE 249	PAGE 250	PAGE 250	PAGE 250	PAGE 251	PAGE 251	PAGE 251	PAGE 252

MC-32	MC-33	MC-34	MC-35	MC-36 TO MC-39D	MC-40	MC-41
PAGE 252	PAGE 253	PAGE 253	PAGE 254	PAGE 254	PAGE 255	PAGE 231, 256

MC-41D	MC-41-TR	MC-41-R	MC-41D-R	MC-42	MC-42D	MC-42-R
PAGE 257	PAGE 258	PAGE 257	PAGE 259	PAGE 259	PAGE 260	PAGE 260

PICTORIAL INDEX

MC-42D-R	MC-51 MC-51-LP	MC-53	MC-54	MC-55	MC-56	MC-60
PAGE 261	PAGE 261	PAGE 263	PAGE 263	PAGE 263	PAGE 264	PAGE 264
MC-61	SPECIALTY FIXTURE CARRIERS	MHY-10, 15, 16	MHY-20, 25, 26	MC-30	MC-35	MHY-40
	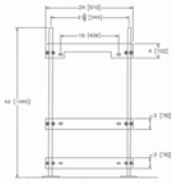		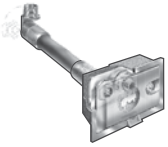		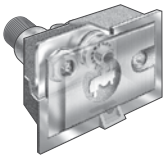	
PAGE 264	PAGES 265-266	PAGE 274	PAGE 274	PAGE 275	PAGE 275	PAGE 276
MHY-45	MHY-50	MHY-55	HYDRANT BOXES	HYDRANT REPAIR KITS	MHY-58	MHY-60
		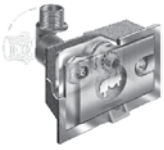				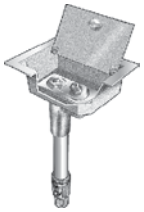
PAGE 276	PAGE 277	PAGE 277	PAGE 278	PAGE 282	PAGE 279	PAGE 280
MHY-61	MHY-65, 66	MHY-68	MHY-90, 91, 92	BV1000	BV1200-R	BV1210
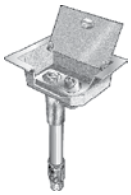						
PAGE 280	PAGE 281	PAGE 281	PAGE 282-283	PAGE 284	PAGE 284	PAGE 285
BV1250	BV1260	BV1280	BV1290	BV1300	MI-940	MI-950
			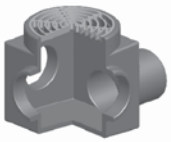			
PAGE 285	PAGE 285	PAGE 286	PAGE 286	PAGE 287	PAGE 289	PAGE 289
MI-950-F	MI-CAG	MI-GAP-NPB	MI-GRILL	MI-100	MI-200	
				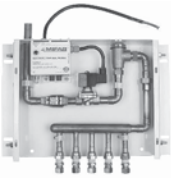		
PAGE 289	PAGE 290	PAGE 290	PAGE 290	PAGE 298	PAGE 300	

PICTORIAL INDEX

MI-300	M-500-NPB	MI-DU	MI-TSP-NPB	MI-GARD		MI-600
PAGE 300	PAGE 295	PAGE 296	PAGE 296	PAGE 309		PAGE 307
MI-600-50	MI-700	MI-730	MI-750	MI-800	MI-830	MI-850
PAGE 307	PAGE 308	PAGE 307	PAGE 308	PAGE 288	PAGE 288	PAGE 288
MI-860	MWH-NPB	WHB	A1 BODY A2 BODY A3 BODY	PARTS, CLAMPS	CLAMPS, HARDWARE, PARTS	PARTS, HARDWARE, SPACERS
PAGE 288	PAGE 313	PAGE 314	PAGE 315	PAGE 316	PAGE 317	PAGE 317, 318
F 4" ROUND FUNNEL STRAINER	TOP ASSEMBLIES	FLOOR SINK GRATES	FLOOR SINK PARTS	ROOF DRAIN PARTS	CLEANOUT PARTS	INTERCEPTOR PARTS
PAGE 319	PAGE 320	PAGE 321	PAGE 322	PAGE 323	PAGES 324-325	PAGE 326
CARRIER PARTS	CROSS REFERENCE	CROSS REFERENCE J.R. SMITH	CROSS REFERENCE WADE	CROSS REFERENCE WATTS	CROSS REFERENCE ZURN	
	JOSAM —— MIFAB	J. R. SMITH —— MIFAB	WADE —— MIFAB	WATTS —— MIFAB	ZURN —— MIFAB	
PAGE 327-330	PAGE 333	PAGE 337	PAGE 344	PAGE 348	PAGE 355	

OUR REPUTATION IS STAINLESS

KEY FEATURES AND BENEFITS:

- Modular system with fewer parts, reduced confusion on job site, and fewer returns.
- Standard A1 body serves as a floor drain, cleanout and roof drain. This reduces inventory.
- Cast 304 stainless steel grates and cleanout covers for same price as nickel bronze. Prevents dishing, corrosion and discoloration.
- 4” NPSM threads at top of A1 body allows drain to be installed without membrane clamp for non waterproof slab on grade floors.
- A1 body with no hub connection is only 3” deep for compact rough-in.
- A1 body always shipped tapped and plugged for trap seal primer connection.
- All area drain grates are adjustable and made of ductile iron with a load rating of over 10,000 lbs. for maximum on site adjustment and load bearing.
- Closet and lavatory carriers designed and packaged with features to save installation time and handling cost.

NOW YOU CAN SPECIFY STAINLESS STEEL AT THE SAME PRICE AS NICKEL BRONZE. SPECIFY MIFAB STAINLESS FOR A LASTING IMPRESSION

AREA DRAIN FEATURES

MIFAB AREA DRAIN STANDARD BENEFITS

- Ductile iron grate offers greater than 10,000 lb. load rating.
- Non-tilt grate is safer in all traffic areas.
- 3/8” slots prevent large debris from entering the drainage system.
- 4 Fully adjustable top assemblies for ease of installation.
- Stainless Steel tops at the same price as Nickel Bronze.

Design and dimensions are subject to modification. Prices do not include applicable taxes. Visit **www.mifab.com** for the most recent product information.
MIFAB®, Inc., 1321 West 119th Street, Chicago, Illinois 60643-5109, USA
Toll Free: 1-800-465-2736 • Fax: 1-773-341-3049
sales@mifab.com • Canada Toll Free: 1-800-387-3880
All sales subject to MIFAB’s® Terms & Warranties. Please refer to inside front cover.

INTRODUCTION TO THE MIFAB® SPECIFICATION CATALOG

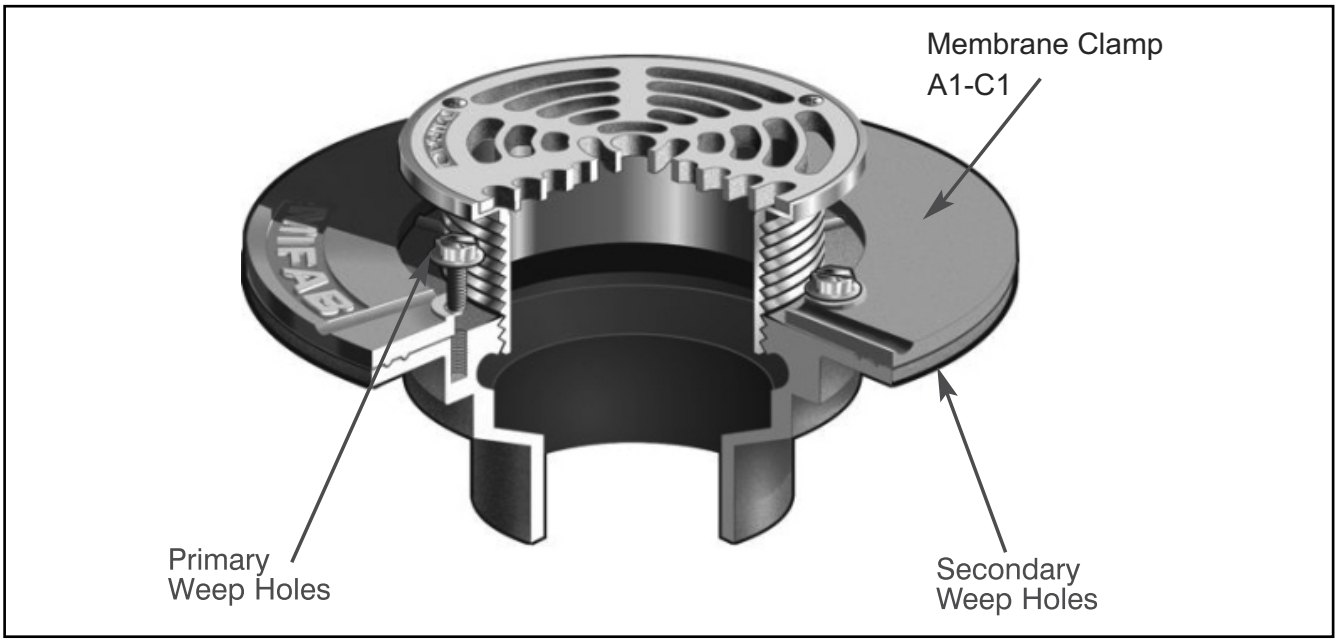

The beginnings of the modern specification drainage product can be traced back to the early part of the twentieth century. Architects began to demand a drain with secondary drainage to protect both the aesthetics and structural integrity of their buildings. Until this time, a drain was usually nothing more than a grate fitted in the end of a pipe which terminated at the floor level. Unfortunately, this led to water seeping around the pipe and the ruining of ceilings, etc., in the floors below.

The design of a drain with secondary drainage meant that a drain body had to be designed that allowed weepholes to remove water that may seep around the rim of the drain. Since then, architects and mechanical designers have been able to specify products that featured a variety of design considerations that were made necessary by the rapidly changing building techniques we have experienced since the beginning of the twentieth century.

As we built both higher and faster, architects and engineers realized the need for a drain with not only secondary drainage, but also a clamping device to secure a waterproofing membrane in multi-story buildings. These developments ushered in the era of competition in the specification drainage market, as new manufacturers duplicated and expanded upon the products of those who had produced before. More recently, the advent of the adjustable drain and the floor mounted carrier for off the floor fixtures added to the already overwhelming variety of specifiable products available to the architect and mechanical designer. Today, a specifier can choose from literally thousands of products from many manufacturers. A mechanical designer has to be careful at every turn to make sure he has decided between non tilt or tractor grates, between ductile and gray cast iron, between adjustable and non-adjustable top assemblies, heel proof or non heel proof grates. In short, a baffling array of options that do little to improve the basics of the design, i.e. free area and load bearing characteristics.

The MIFAB ® Advantage

A logical, function driven product line that replaces confusion with simplicity and offers all the features required by today's building practices without all the unnecessary duplication.

The MIFAB® Design

Among the many outstanding design features of the MIFAB product line, the following are unique:

• **BODIES/MODULAR DESIGN.** The majority of floor drains, roof drains and cleanouts illustrated in this catalog incorporate the use of only three different bodies. The A1 body is used with floor drains, roof drains and cleanouts which are subject to pedestrian or heavy traffic loads and low flow rates. The shallow design of the A1 body allows for installation in slabs of minimum thickness.

A1, A2 & A3 Bodies

Because a membrane clamp is usually not required (the majority of drains and cleanouts are installed slab on grade), MIFAB's A1 body design incorporates an integral female thread (4" N.P.S.M.) to receive adjustable strainers or cleanout tops.

The A2 body with a 6" deep sump is used for floor and roof drains for most other applications. The A3 body with the 12" deep sump is designed for high flow applications in floors or roofs.

• **Top Assemblies/Modular Design. MIFAB introduces the F1000/C1000 Series floor drains and cleanouts with Type CF8 (304) cast stainless steel strainers/ top assemblies. This material offers superior corrosion resistance and will not discolor due to oxidization as well as the heavy duty load bearing characteristics of stainless steel.**

This means the elimination of dished and discolored strainers and cleanout tops when this product is specified.

MIFAB's adjustable round and square top assemblies for unfinished areas incorporate standard ductile iron grates which ensure flush installation of the drains at the low point of the drainage area to be serviced and eliminates any unwanted movement or dishing of the grate due to heavy wheel loads. These top assemblies are available with optional stainless steel veneers to provide an attractive and heavy-duty installation in any application where an area drain with a cast or ductile iron grate alone would be unsightly, such as public promenade areas.

F1340 with adjustable top assembly highlighted

MAXIMUM 3/8" WIDE GRATE DRAINAGE SLOTS. This eliminates the need for the designer to differentiate between regular and pedestrian grates. In addition these narrow slots restrict solids from entering the drain, which reduces the need for a sediment bucket or secondary strainer, both of which can reduce the flow rate of the drain by as much as 60%.

Max 3/8" slots

OTHER MODULAR OPTIONS. MIFAB's roof drain clamps are interchangeable as flashing clamp rings, deck clamps and extensions. This greatly simplified system eliminates a significant number of parts found in other manufacturer's designs.

• **CLEANOUTS.** MIFAB's cleanout design incorporates a combined gasketed cover and cleanout plug at floor level which ensures the cleanout will be gas tight so long as the cover/plug is in place. The elimination of secondary plugs made of plastic, brass or iron ensures quick and simple emergency access to the drain line. An exclusive O -ring on the adjusting threads ensures 100% test seal. When MIFAB's C1000-3 stainless steel Series is specified, you can be assured that this cleanout will not discolor or dish for the life of the building.

R1200-EU

Design and dimensions are subject to modification. Prices do not include applicable taxes. Visit **www.mifab.com** for the most recent product information.
MIFAB®, Inc., 1321 West 119th Street, Chicago, Illinois 60643-5109, USA
Toll Free: 1-800-465-2736 • Fax: 1-773-341-3049
sales@mifab.com • Canada Toll Free: 1-800-387-3880
All sales subject to MIFAB's® Terms & Warranties. Please refer to inside front cover.

"Patina" – Ductile Iron does not Rust

PATINATION

Patination is any film or coating on metal caused by oxidation. Unfinished cast metals weather well in most instances. Cast / Ductile iron, aluminum and nickel bronze will last many decades with little change if left unfinished. The natural changes in metals due to atmospheric exposure is called patination.

Patination is also called iron rust - the red or orange coating that forms on the surface of iron when exposed to air and moisture; consisting chiefly of ferric hydroxide and ferric oxide formed by oxidation.

On cast and ductile iron, the patina is iron oxide (to the chemist it is iron oxide and to the rest of us it looks like rust.) Cast iron oxidizes extremely quickly. In fact, cast iron will begin to oxidize when the relative humidity exceeds about 64%. Unlike steel, however, the oxidization on cast iron is not invasive but will act like a coating to prevent deep rusting. Therefore, oxidization on cast and ductile iron grates in no way harms their structural integrity. The patination of cast and ductile iron grates goes through a predictable set of stages. The duration of each stage depends on local moisture conditions and the amount of foot traffic. Grates will progress slower in the desert than at the beach but the process is inevitable; regardless of location.

Copper Alloys (such as nickel bronze) are well known for their patinas. The natural patination of copper alloys is unpredictable and is part of its' charm. Colors arising from the oxidation of bronze range from pale greens and yellows to white to turquoise to dark brown.

MIFAB STAINLESS STEEL, SUFFIX –3

MIFAB cast stainless steel strainers are produced in Type CF8 (304) stainless steel which is an 18-8 austenitic stainless steel possessing excellent corrosion resistant characteristics. Fabricated SS veneers are formed from Type 304 SS sheet. Both cast & stainless products are polished to a number 4 satin finish. In highly corrosive areas strainers and cleanout covers are available with the option –29, Type 316 stainless steel. Body and collars assemblies in highly corrosive areas may be specified in solid cast Type 304 (-28) or solid cast Type 316 (-29).

MIFAB NICKEL BRONZE SUFFIX –1

MIFAB nickel bronze is a copper/nickel alloy (copper alloy 997) that is broadly used for adjustable strainers, funnels and cleanout tops and as veneers on standard ductile iron tops. In areas where there is a concern for discoloration due to oxidization, MIFAB stainless steel strainers, cleanout covers and area drain assemblies are recommended to be specified with solid cast strainers or cast or fabricated S S veneers.

MIFAB ACID RESISTANT PORCELAIN ENAMEL –A.R.E.

Acid resistant porcelain enamel is a vitreous or glassy inorganic coating bonded to metal by fusion at a high temperature above 800°F. This coating is extremely hard and is ideal for sanitation in drainage applications. MIFAB's acid resistant procelain enamel coating conforms to the requirements of F.D.A. (Food and Drug Administration) Regulation 21-CFR5 117.1360.

MIFAB DUCTILE IRON SUFFIX –4 All MIFAB ferrous grates are supplied in ductile iron that has superior shock resisting qualities in addition to greater strength when compared to gray iron.

MIFAB's ductile iron complies to ASTM specification A 536-84, Grade 60-45-10.

Recommended for all areas subjected to heavy vehicular traffic. Ductile iron also exhibits superior corrosion resistance when compared to regular gray iron.

MIFAB COATED CAST IRON SUFFIX –50

All MIFAB floor drain, roof drain and cleanout bodies, collars and clamping rings are manufactured with cast iron material that conforms to ASTM specification for Gray Iron Castings A 48-83, Class 25. MIFAB cast iron has excellent resistance to corrosion in normal drainage applications because of the high quality coating which prevents rusting or discoloration in normal applications.

MIFAB ACID RESISTANT EPOXY COATING, SUFFIX -11

Acid resistant epoxy coating is a baked-on powder coating, which produces a smooth, hard, high gloss finish. This epoxy based coating offers high impact resistance and long life expectancy in all applications. MIFAB's -11 coating conforms to the requirements of the F.D.A. (Food and Drug Administration) Regulation 21-CFR5 117.1360.

MIFAB GALVANIZED CAST IRON, SUFFIX –13

MIFAB galvanized cast iron is a process applied to specially prepared gray or ductile iron castings. This coating contains 95% zinc and increases longevity and is recommended where the discoloration or oxidization of iron or steel is objectionable. Galvanizing is recommended in coastal or industrial areas where a corrosive atmosphere may be encountered. MIFAB galvanizing meets or exceeds Government specification MIL-P-26433, MIL-P-21035, MIL-P 26915A and MIL-C-10578 (Type II). It also meets ASTM A239-89.

MIFAB ALUMINUM:

Casting grade 319. This is an alloy that contains silicon and copper. It is a solid cast metal.

DYNAC?

(Do you need a clamp?)

Except for MIFAB, the specification drain manufacturers **require** a membrane clamp in most, if not all of their floor and area drains **to receive** fixed (non-adjustable) or adjustable top assemblies.

Most floor and area drains are installed in “slab on grade” areas where no waterproofing membrane is required. The MIFAB body design incorporates a female thread to accept adjustable top assemblies up to 9” diameter or 8” square and lugs on the larger bodies which receive top assemblies 12” diameter and larger.

THIS FEATURE SIGNIFICANTLY REDUCES THE INSTALLED COST OF MOST FLOOR AND AREA DRAINS BECAUSE THE INSTALLER CAN AVOID USING AND PAYING FOR THE MEMBRANE CLAMP.

When MIFAB drains are installed in waterproofed areas, an optional (Suffix -C) membrane clamp is available.

Non membrane floors
(no waterproofing)
(**90%** of “on grade” applications)

Membrane floors
(with waterproofing)
(**10%** of applications)

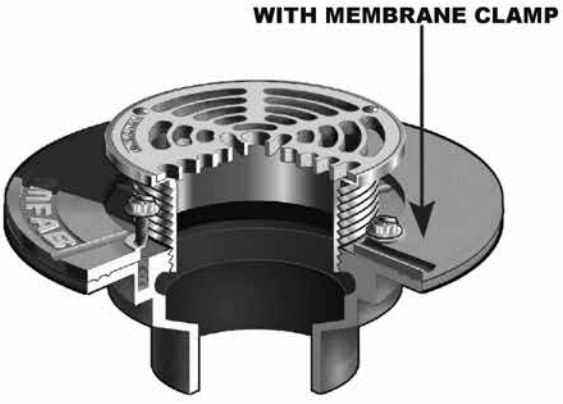

Specify MIFAB’S floor drains with heavy duty stainless steel strainers **FOR THE SAME PRICE** as conventional floor drains with membrane clamps and light duty nickel bronze strainers.

Design and dimensions are subject to modification. Prices do not include applicable taxes. Visit **www.mifab.com** for the most recent product information.
MIFAB®, Inc., 1321 West 119th Street, Chicago, Illinois 60643-5109, USA
Toll Free: 1-800-465-2736 • Fax: 1-773-341-3049
sales@mifab.com • Canada Toll Free: 1-800-387-3880
All sales subject to MIFAB’s® Terms & Warranties. Please refer to inside front cover.

THE MIFAB MODULAR SYSTEM

A Floor Drain

Is an Area Drain

Is a Roof Drain

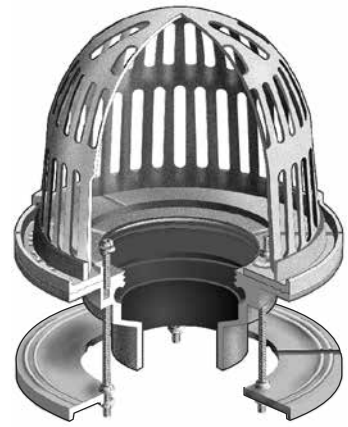

Is a Cleanout

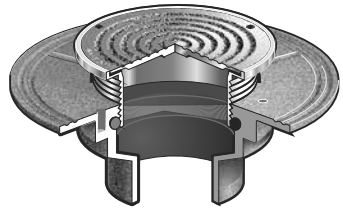

DYNAC
(DO YOU NEED A CLAMP?)

In 90% of today's "slab on grade" installations, there is no need for a membrane clamp, as there is no waterproofing membrane installed. Because MIFAB's unique design allows the strainer assembly to install directly into the throat of the drain body, the use of a membrane clamping collar is optional.

This is an opportunity for cost savings.
Why use a drain with a membrane clamp if it is not neccessary?

The MIFAB Modular System

MC-10 WATER CLOSET CARRIER MC-10

Horizontal, adjustable fixture carrier.
Elevates toilet off floor for easier cleaning.

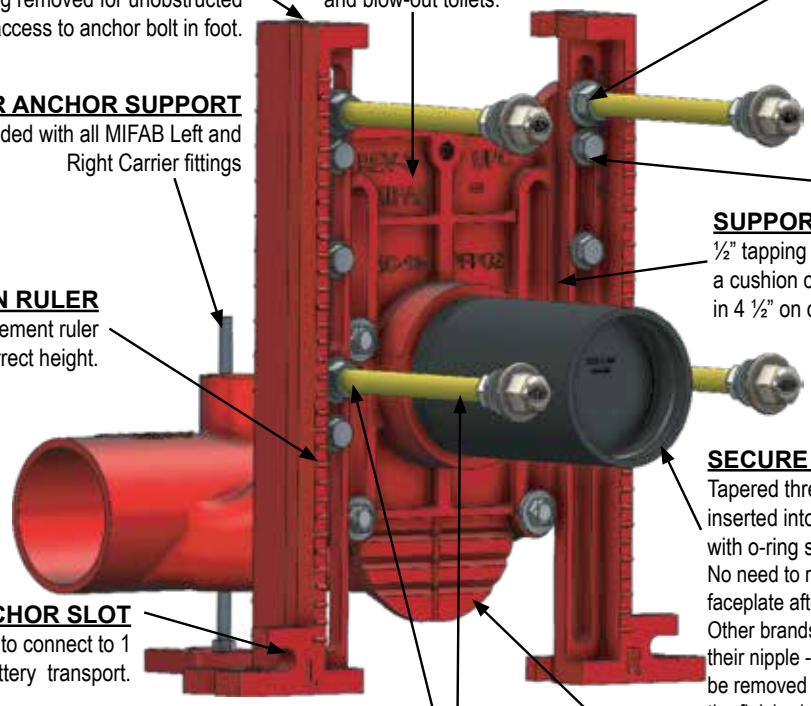

NARROW LEGS
2 ¾" legs for narrow install. Outside top of leg removed for unobstructed access to anchor bolt in foot.

UNIVERSAL
Same faceplate used for both siphon jet and blow-out toilets.

SAVE TIME
Bolts connect legs to the faceplate from the front.

REAR ANCHOR SUPPORT
provided with all MIFAB Left and Right Carrier fittings

QUICK INSTALL
All bolts have a built-in washer design.

SUPPORT
½" tapping for support strut to accept a cushion clamp for flush valve rough in 4 ½" on center.

BUILT-IN RULER
½" increment ruler to get correct height.

SECURE NIPPLE
Tapered thread nipple inserted into faceplate with o-ring secondary seal.
No need to remove the nipple from the faceplate after the water test to cut.
Other brands have a flare at the end of their nipple - requiring their nipples to be removed after the water test to cut to the finished wall.

PRE-FAB ANCHOR SLOT
Slot is 1" from the bottom to connect to 1 ½" angle iron for pre-fab battery transport.

EASY TO USE
Faceplate has easy to break off tabs set at common heights.

ROD PROTECTORS
Rod protectors come preassembled to prevent mortar from affecting threads with backup nut already assembled onto rods.

All MIFAB MC-10 carrier fittings are packed in a single carton box with the rear anchor support

HARDWARE PACKS
MIFAB closet carriers are shipped with two different hardware packs - one for the rough in and one for the finish trim. Big advantage vs. others that ship all of the hardware combined in one bag - easy to lose the finish trim at the end of the job when you need it.

2" No Hub auxiliary inlet included with all MIFAB long barrel carriers.

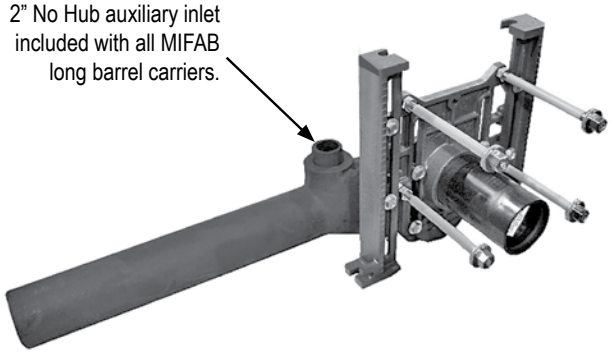

Check out the MC-10-27-37 long barrel carrier from MIFAB. It is standard at 37" long (to allow for the 1" thick partition between the toilets and is also standard with the -27 auxiliary inlet connection to receive lavatory or urinal waste.

Note: Consult with your MIFAB service representative to order the proper "right" and "left" products.

Design and dimensions are subject to modification. Prices do not include applicable taxes. Visit **www.mifab.com** for the most recent product information.
MIFAB®, Inc., 1321 West 119th Street, Chicago, Illinois 60643-5109, USA
Toll Free: 1-800-465-2736 • Fax: 1-773-341-3049
sales@mifab.com • Canada Toll Free: 1-800-387-3880
All sales subject to MIFAB's® Terms & Warranties. Please refer to inside front cover.

MC-41 UNIVERSAL LAVATORY CARRIER MC-41

UNIVERSAL Lavatory Carrier with Concealed Arms

Floor mounted concealed arm lavatory carrier with lacquered, adjustable, ductile iron concealed support arms.

UNIVERSAL LAV. CARRIER:

- No need to ask which lavatory is being used.
- Only one set of universal arms to fit all but long ADA lavs.
- Tapping in Header bracket is offset from the upright so that the nipple can thread into the open space.
- Header bracket is reversible and can be offset for second adjustment.
- Arm can be adjusted into the nipple.

ADDITIONAL FEATURES

- Other manufacturers require
- different arms for different sink sizes.
- Hardware always assembled onto arms with bag around each arm to prevent loose hardware.

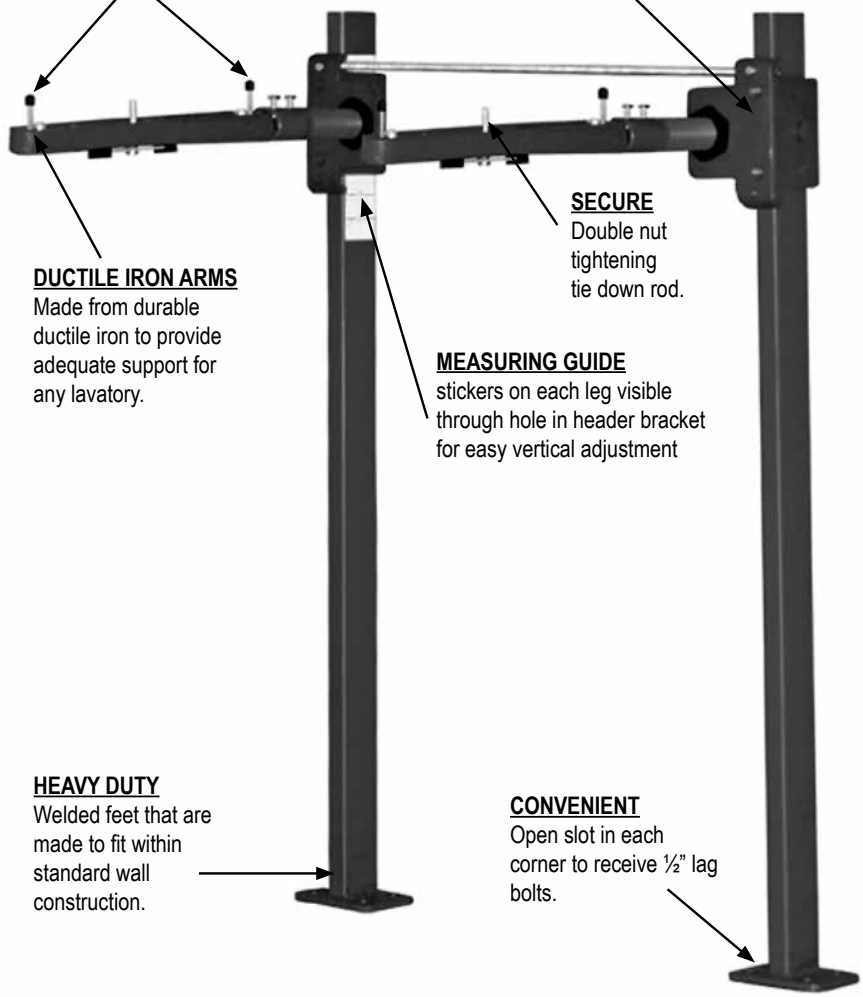

PACKAGING
All components of the MC-41 are packed tightly into a single box for easy handling and shipping.

SPECIAL DUTY LOAD RATED CLEANOUT TOP

The perfect cleanout for the industrial warehouse environment.

KEY ADVANTAGES:

- "Special Duty" load rated cover - over 10,000 lbs.
- Ductile Iron cover – 1/2" thick with no recesses around the edges.
- Will not crack or dish when forklifts drive over it.
- Threads into MIFAB® A1 and A4 bodies.

Part No. XR-4

MIFAB Cleanout assembly model # is C1100-XR-4

Optional membrane clamp (Suffix -C)

FOUR IN ONE AREA DRAIN DESIGN:

- MIFAB® Area Drains utilize a unique Four-in-One Top Design:

- Adjustable
- Fixed
- Extra Heavy Duty Load Rating
- Regular Duty Load Rating

- Most of our competitors have four (4) different area drains to do what one (1) MIFAB area drain can do.
- Standard floor drain can be converted into an area drain by simply swapping strainer.
- Use with or without membrane clamp. Save **$82.00** List Price without clamp.
- MIFAB grates are standard DUCTILE IRON - not cast iron.

Design and dimensions are subject to modification. Prices do not include applicable taxes. Visit **www.mifab.com** for the most recent product information.

MIFAB®, Inc., 1321 West 119th Street, Chicago, Illinois 60643-5109, USA
Toll Free: 1-800-465-2736 • Fax: 1-773-341-3049
sales@mifab.com • Canada Toll Free: 1-800-387-3880

All sales subject to MIFAB's® Terms & Warranties. Please refer to inside front cover.

DYNAB – Do You Need A "Boneyard?"

- MIFAB Parts add up to the same price as the complete drain.*
- *(with a very few exceptions)
- See Pages 315 through 332
- Parts are the same multiplier as the assemblies.
- Interchangeable body – One body serves 4 drains
- No need to order complete drain for one component
- This means a significant savings in cost and space over JaSaWaZ.
- Typical contractor boneyard consists of left over drains that cannot be re-used on future jobs and/or components the contractor is forced to buy at a much higher cost. MIFAB's multiplier for parts is the same as our drain assemblies.

MIFAB's unique modular design and parts system does away with this unsightly, unnecessary and expensive annoyance.

ALLSTAR© COVER

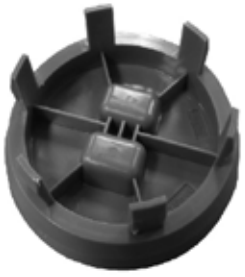

Allstar cover with any MIFAB A1 body

Allstar cover with any MIFAB A4 body

MIFAB's new, patent pending Allstar© cover is available in 5" and 6" round sizes to work with any of MIFAB's 5" and 6" round nickel bronze or stainless steel floor drain and cleanout tops.

It is manufactured from recycled plastic and is designed to fit into any of MIFAB's A1 and A4 PVC, ABS or cast iron bodies.

Contractors fit the Allstar cover into the top of the MIFAB drain body before the concrete contractors to measure the level of the concrete floor from the top of the Allstar cover.

After the concrete pour around the top of the Allstar cover, the Allstar cover is removed with a channel lock tool placed into the recessed slot in the middle of the cover and pried off.

The 4" NPSM threads machined into the top of all of MIFAB's A1 and A4 bodies are then exposed to allow the contractor to thread in any MIFAB 5" (use the 5" Allstar cover) or 6" (use the 6" Allstar cover) round floor drain and cleanout top into the top of the bodies. The tops can be adjusted to the finished floor.

There is only a 1/8" space around the outside diameter of the floor drain or cleanout top of finished off with grout.

The Allstar cover is appropriately ¾" high and is made from smooth plastic material with angled sides to ensure removal after the pour.

There are several advantages to the Allstar cover:
1) The contractor can avoid taping the floor drain and cleanout tops prior to installation to ensure that they are protected during the construction process. This eliminates time to tape the floor drain / cleanout tops and also eliminates cleaning time to remove the tape from them before the project is handed over to the client.

2) The contract can avoid installing the floor drain and cleanout tops until the end of the project reducing the risk that they will be stolen or damaged.

(3) The floor drain / cleanout tops can be adjusted to the finished floor after the concrete pour.

4) The Allstar cover can be purchased separately from the floor drain and cleanout bodies.

5) The Allstar cover can be used over and over again.

MODEL NUMBER	LIST PRICE
A1-5-ALLSTAR	See CLPB List Price Book
A1-5-ALLSTAR	See CLPB List Price Book

All sales subject to MIFAB's Terms and Warranties.
Please refer to inside front cover.

Design and dimensions are subject to modification. Prices do not include applicable taxes. Visit **www.mifab.com** for the most recent product information.
MIFAB®, Inc., 1321 West 119th Street, Chicago, Illinois 60643-5109, USA
Toll Free: 1-800-465-2736 • Fax: 1-773-341-3049
sales@mifab.com • Canada Toll Free: 1-800-387-3880
All sales subject to MIFAB's® Terms & Warranties. Please refer to inside front cover.

DRAIN BODY DIMENSION REFERENCE CHARTS

DRAIN BODY DIMENSION HEIGHTS

A1 BODY HEIGHT

PIPE SIZE	PVC (-30) ABS (-31)	NO HUB (STANDARD)	PUSH ON (P)	THREADED (T)	INSIDE CAULK (X)	STAINLESS STEEL (-28)
2"	2 5/8"	3"	3 3/8"	2 1/4"	3 3/4"	2 3/4"
3"	3 1/4"	3"	3 3/8"	2 5/8"	3 3/4"	2 3/4"
4"	3 1/2"	3"	3 3/8"	2 5/8"	3 3/4"	2 3/4"
5"	-	3"	-	2 5/8"	6 7/8"	-
6"	-	3 1/2"	6 7/8"	-	-	-

*Specify POG-6 for C.I. pipe and POG-6-PVC for PVC pipe.
2", 3", 4" sizes use same gasket.

A1-6NH-7

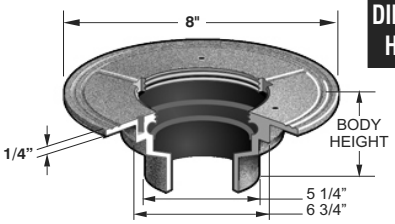

The A1 Body

A1-90 THREADED SIDE OUTLET BODY HEIGHT

MODEL NUMBER	PIPE SIZE	"B" BODY HEIGHT	"A" FLANGE TO CENTER OF OUTLET	"C" FLANGE TO TOP OF OUTLET
A1-2T-90-7	2"	3 5/8"	2 1/4"	5/8"
A1-3T-90-7	3"	6 1/8"	3 1/2"	-
A1-4T-90-7	4"	6 1/8"	3 1/4"	-

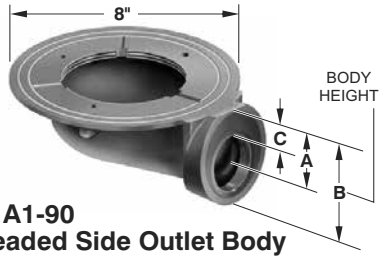

The A1-90
Threaded Side Outlet Body

A1-90 NO HUB SIDE OUTLET BODY HEIGHT

MODEL NUMBER	PIPE SIZE	"B" BODY HEIGHT	"A" FLANGE TO CENTER OF OUTLET	"C" FLANGE TO TOP OF OUTLET
A1-2-90-NH-7	2"	3 1/2"	2 3/8"	1 1/8"
A1-3-90-NH-7	3"	4 3/8"	2 5/8"	1"
A1-4-90-NH-7	4"	5 3/8"	3 1/8"	1"

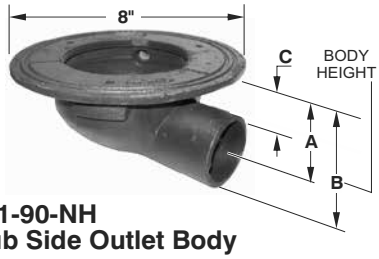

The A1-90-NH
No Hub Side Outlet Body

A2 BODY HEIGHT

PIPE SIZE	NO HUB (STANDARD)	PUSH ON (P)	THREADED (T)	INSIDE CAULK (X)	PVC (-30) ABS (-31)
2"	5 3/4"	5 1/2"	6 1/2"	6 1/2"	6 3/4"
3"	5 3/4"	5 1/2"	6 5/8"	6 1/2"	7 1/2"
4"	5 3/4"	5 1/2"	5 1/2"	6 1/2"	7 5/8"
5"	5 3/4"	-	6 5/8"	6 3/4"	-
6"	7 1/4"	5 5/8"	5 5/8"	6 1/2"	-
8"	5 7/8"	-	-	See note*	-

*FOR DRAINS REQUIRING AN 8" INSIDE CAULK CONNECTION, USE A7-8X BODY

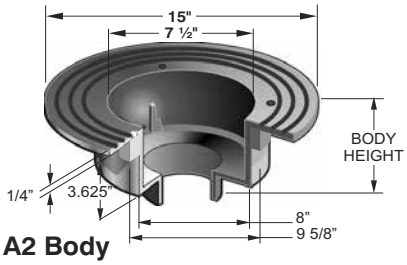

The A2 Body

A2-90 THREADED SIDE OUTLET BODY HEIGHT

MODEL NUMBER	PIPE SIZE	"B" BODY HEIGHT	"A" DIMENSION THREADED OUTLET	"A" DIMENSION NO HUB OUTLET
A2-2T-90-7	2"	5 3/4"	4"	3 7/8"
A2-3T-90-7	3"	5 3/4"	3 1/2"	3 3/8"
A2-4T-90-7	4"	5 3/4"	3 3/8"	2 7/8"

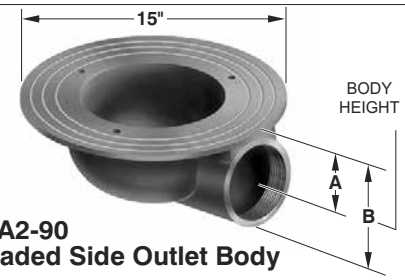

The A2-90
Threaded Side Outlet Body

A2-90 NO HUB SIDE OUTLET BODY HEIGHT

MODEL NUMBER	PIPE SIZE	"B" BODY HEIGHT	"A" DIMENSION THREADED OUTLET	"A" DIMENSION NO HUB OUTLET
A2-2-90-NH-7	2"	5"	4"	2 3/4"
A2-3-90-NH-7	3"	5"	3 1/2"	1 3/4"
A2-4-90-NH-7	4"	5"	2 7/8"	5/8"

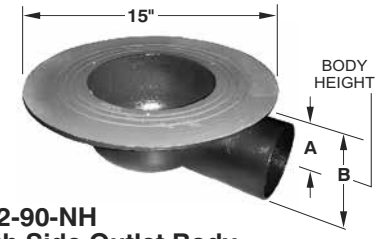

The A2-90-NH
No Hub Side Outlet Body

DRAIN BODY DIMENSION HEIGHTS

DRAIN BODY DIMENSION REFERENCE CHARTS

DRAIN BODY DIMENSION HEIGHTS

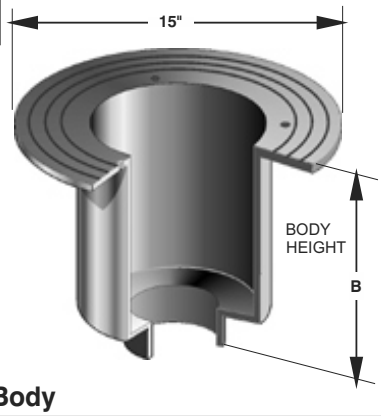

The A3 Body

A3 BODY HEIGHT

PIPE SIZE	NO HUB STANDARD	PUSH ON (P)	THREADED (T)	INSIDE CAULK (X)	PVC (-30) ABS (-31)
2"	12 1/4"	12 1/2"	11 1/2"	13"	11 3/4"
3"	12 1/4"	12 5/8"	11 7/8"	13"	12 1/2"
4"	12 3/8"	12 5/8"	11 7/8"	13"	12 5/8"
5"	12 3/8"	-	11 7/8"	16"	-
6"	12 5/8"	16"	-	-	-

Note: The A3 body is manufactured as a transition body and requires an A1 body assembled to it to form the outlet connection

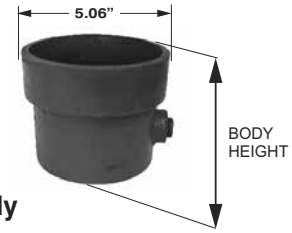

The A4 Body

A4 BODY HEIGHT

PIPE SIZE	NO HUB (STANDARD)	PUSH ON (P)	PVC (-30) ABS (-31)
2"	4"	4 3/8"	3 5/8"
3"	4"	4 3/8"	4 5/16"
4"	4"	4 3/8"	4 11/16"

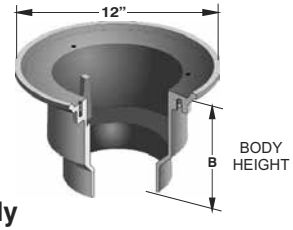

The A5 Body

A5 BODY HEIGHT

PIPE SIZE	NO HUB (STANDARD)	INSIDE CAULK (X)
2"	6 1/2"	6.575"
3"	6 1/2"	6.575"
4"	6 1/2"	6.575"
6"	6 1/2"	6.575"

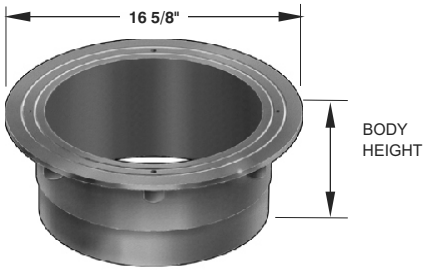

The A7 Body

A7 BODY HEIGHT

PIPE SIZE	NO HUB OUTLET (STANDARD)	INSIDE CAULK OUTLET (X)
8"	See note*	5 3/4"
10"	5 5/8"	-
12"	5 5/8"	-

*For Drains Requiring and 8" No-Hub connection, use A2-8NH body

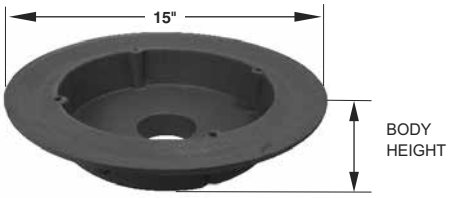

The A8 Body

A8 BODY HEIGHT

PIPE SIZE	NO HUB (STANDARD)	INSIDE CAULK (X)
2"	4 1/8"	-
3"	4 1/8"	5.05"
4"	4 1/8"	5.05"
5"	4 1/8"	5.05"
6"	4 1/8"	5.05"

Design and dimensions are subject to modification. Prices do not include applicable taxes. Visit **www.mifab.com** for the most recent product information.
MIFAB®, Inc., 1321 West 119th Street, Chicago, Illinois 60643-5109, USA
Toll Free: 1-800-465-2736 • Fax: 1-773-341-3049
sales@mifab.com • Canada Toll Free: 1-800-387-3880
All sales subject to MIFAB's® Terms & Warranties. Please refer to inside front cover.

MIFAB FLOOR DRAIN FEATURES

F1000
FLOOR DRAIN WITH HEAVY DUTY ROUND STAINLESS STEEL STRAINER

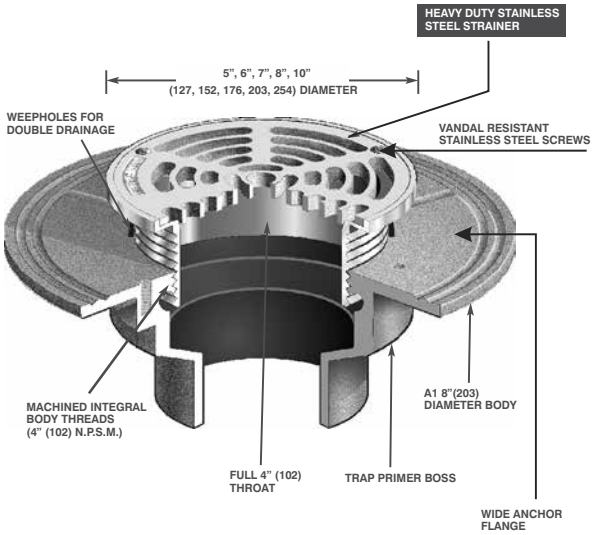

F1000-S
FLOOR DRAIN WITH HEAVY DUTY SQUARE STAINLESS STEEL STRAINER

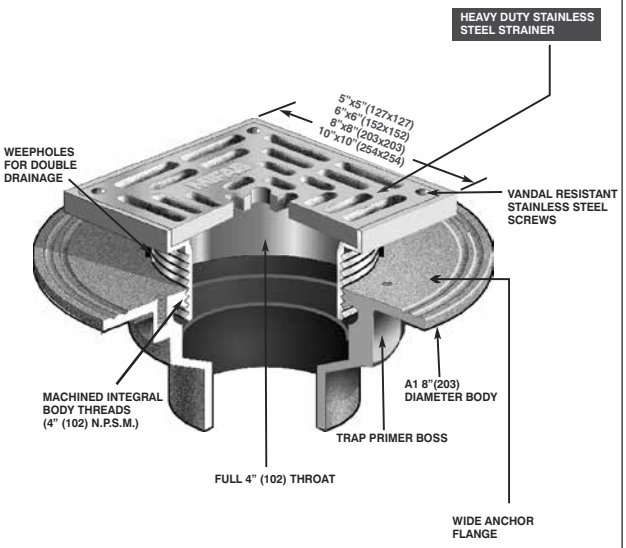

MIFAB AREA DRAIN FEATURES

F1340
FLOOR DRAIN WITH 12" ROUND ADJUSTABLE TRACTOR GRATE

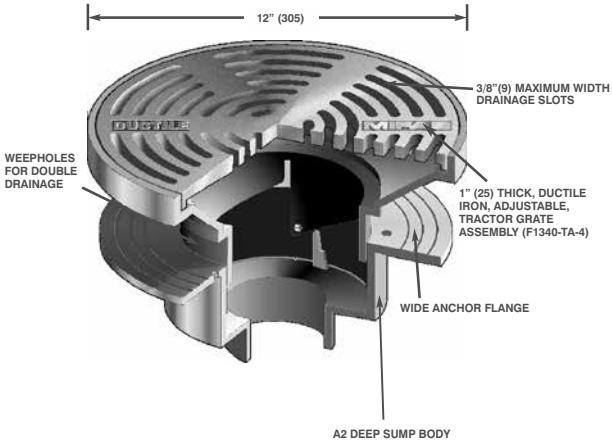

F1440
FLOOR DRAIN WITH 12" SQUARE ADJUSTABLE TRACTOR GRATE

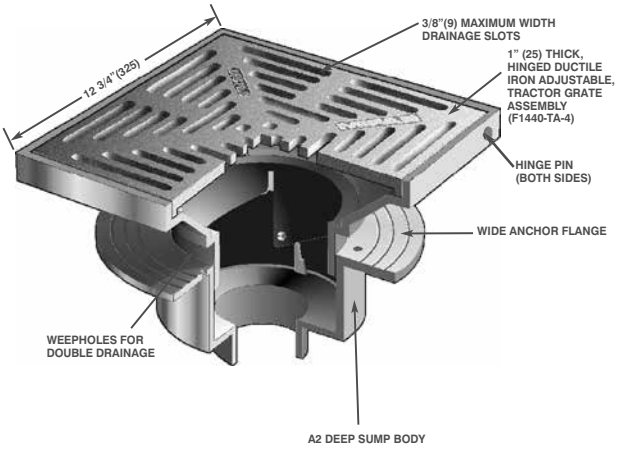

MIFAB® FLOOR DRAIN SELECTION GUIDE

Floor drains and accessories combine to form the upstream or entrance terminals of a building's floor drainage system. Area drains serve in a similar capacity for drainage of surface areas immediately adjacent to the building. The selection and specification of drains for interior floor areas and exterior surface areas merit careful consideration. Such factors as size, shape, function and anticipated drainage requirements of the area must be taken into account when planning for adequate and proper drainage of the area. These elements are of equal importance when sizing and locating the drains and drainage lines to which they are connected. Furthermore, many factors concerning plumbing and building codes apply, so it is recommended that they be consulted at the outset of selection and specification considerations.

SIZING

The potential volume of drainage to be accommodated by drains serving interior areas can, as a rule, be calculated with reasonable accuracy using the total amount of water within the area as a basis for sizing. The area's function as well as types of water use equipment used within the area must be considered. For example, a public restroom, with its numerous types of water use fixtures, must include drains sized and located to handle potential overflow due to stoppage as well as routine custodial waste from cleaning by-products. In addition to plumbing fixtures, water requiring floor drainage emanates from man's sources such as run-off from vehicles in garage areas, condensate waste and processed water discharge from equipment hose stations, and emergency drainage as from sprinkler systems or spills. It is a good practice to provide floor drains in any area where a water source is located. Moreover floor drains should be adequately sized and strategically located to avoid standing water on the floor, a potentially hazardous condition. Sizing of area drains for surfaces adjacent to the building is normally based on rainfall and size of the area to be drained. Information concerning such sizing is provided in the MIFAB Roof Drain section of this catalog. Placement of area drains depends on the topography of the area with drains placed at the low points where run-off is anticipated.

SPECIFIC POINTS FOR CONSIDERATION

After the preceding drainage requirements have been resolved and the drainage piping system is developed, the proper floor and area drains to serve the system must be selected and specified. There are a number of points to consider for such selection, knowledge of which will be of assistance in arriving at the proper decision. Comprehensive information on each of the following points for consideration is essential:

- location requirements
- floor construction
- traffic conditions
- drain top and outlet sizes
- drain top, materials and appearance
- trapping of sediment
- backflow prevention
- indirect waste
- drain outlet connections

LOCATION REQUIREMENTS

The locations within and adjacent to the building structure which require provisions for drainage are many. Some significant locations for which drains must be selected are toilet and shower rooms, boiler and equipment rooms, basements, garage and parking areas, kitchens, laundry, utility and service rooms, elevator pits, entry areas, machining and processing areas, refrigeration rooms.... the list goes on and on. Drains should be considered and selected for any location where water is supplied and surface drainage must be accommodated.

FLOOR CONSTRUCTION

Floor construction has a distinct influence on drain selection and therefore must be considered at the outset of the selection process. Such elements as slab type and thickness, surface finish, depth of fill, waterproofing membrane and/or finishing materials will influence the selection. Installation drawings, on pages iv through vii of this section, depict various MIFAB floor drains in different types of construction for reference.

Design and dimensions are subject to modification. Prices do not include applicable taxes. Visit **www.mifab.com** for the most recent product information.
MIFAB®, Inc., 1321 West 119th Street, Chicago, Illinois 60643-5109, USA Toll Free: 1-800-465-2736 • Fax: 1-773-341-3049
All sales subject to MIFAB's® Terms & Warranties. Please refer to inside front cover. sales@mifab.com • Canada Toll Free: 1-800-387-3880

MIFAB® FLOOR DRAIN SELECTION GUIDE (Cont'd)

TRAFFIC CONDITIONS

Once installed, floor drains become integral components of the floor or area in which they are located. Therefore, the drain selected for each installation must have tops or grates capable of sustaining the type of load to be supported by the floor. This is particularly significant where drains selected are installed in traffic locations. It is recognized that top-loading requirements vary with the location, type of construction and service conditions. These requirements for floor and area drains are addressed in American National Standards Institute, Floor Drains, ANSI A112.6.3-2001.1M-2001 with the following five top loading classifications:

LIGHT DUTY - all grates having safe live load under 2000 lbs.

MEDIUM DUTY - all grates having safe live load between 2000 and 4999 lbs.

HEAVY DUTY - all grates having safe live load between 5000 and 7499 lbs.

EXTRA HEAVY DUTY- all grates having safe live load between 7500 and 10,000 lbs.

SPECIAL DUTY - all grates having safe live load over 10,000 lbs. shall be considered special and treated accordingly.

The safe live load is computed by dividing the load at failure by two when the grate is loaded in accordance with the test procedure stipulated in the standard. A 3 1/2" (89) diameter platen was used during the load rating test and applied to the center of the grate. Using these top-loading classifications as a guide when loading requirements for the drains in a given location have been determined, the duty type required can be selected. MIFAB floor drains in this catalog are duty rated as an aid to selection. For additional information where a rating is not clear and for unusual service conditions, contact MIFAB Customer Service.

DRAIN TOP AND OUTLET SIZES

A drain's top size, regardless of its shape-round, square, etc.-influences the number and size of openings between support members, which in total account for the grate's open or free area. Normally, the larger the top the greater the free area. Free area is the key factor used in evaluating the grate's ability to permit sufficient drainage to enter the drain for efficient utilization of the drainage system and prevent build-up of water on the floor or area served by the drain. Codes and standards stipulate that for proper drainage, interior floor drains should have a grate free area equal to one and one-half times the transverse area of the connecting pipe and exterior area drains, subject to rain-fall, two times that of the connecting pipe. Thus, it is important in the selection of floor and area drains to consider the top and outlet sizes as they relate to each other. The following tabulation, taken from ANSI Floor Drain Standard A112.6.3-2001.1M-2001 provides at a glance the grate free area requirements for outlet sizes, thus connecting pipes, based on the ratios given.

DRAIN OUTLET CONNECTION SIZE (SQ. INCHES)	TRANSVERSE AREA CONNECTING PIPE (SQ. INCHES)	GRATE FREE AREA, MINIMUM (SQ. INCHES)	
		INTERIOR	EXTERIOR
2	3.14	5.0	6.5
3	7.06	11.0	14.0
4	12.5	18.0	25.0
5	19.6	30.0	40.0
6	28.3	42.0	56.0

DRAIN TOP MATERIALS AND APPEARANCE

Cast iron is the primary material used in the production of floor drain components. MIFAB floor and area drains are cast in gray cast iron having a tensile strength of 25,000 to 30,000 psi. The ASTM specification for MIFAB's gray iron castings is A 48-83, class 25. Cast ductile iron tractor grates are usually recommended according to duty type for most locations where service, more than appearance, is the determining factor. For example, warehouses, equipment rooms, garages, basements, and service and machine areas in locations where severe service conditions, such as shock or impact loading are factors. Beyond ductility, ductile iron has superior strength to regular cast iron. The combination of strength and ductility make ductile iron the logical choice for such locations. In addition to our ductile iron grates for unfinished areas, MIFAB manufactures adjustable strainers of type CF8 (304) cast stainless steel. For larger capacity drains, with 7" to 24" top assemblies, MIFAB provides cast or fabricated stainless steel veneers polished to a number 4 satin finish. The use of stainless steel versus conventional nickel or polished bronze ensures that there will be no broken or dished grates or any discoloration due to oxidization. **Most MIFAB stainless steel top assemblies and strainers are priced competitively with our conventional nickel bronze products.**

MIFAB® FLOOR DRAIN SELECTION GUIDE (Cont'd)

TRAPPING OF SEDIMENTS

There are few, if any, floors and areas that are free of sediments, debris, and bits of non-liquid waste that will gravitate to the floor drains. Such materials, if permitted to enter drains and drain lines unchecked, will inevitably lead to messy stoppage of the lines. Obviously proper custodial maintenance of the locations will preclude excessive amounts of such materials from entering the drains. However, the presence of a certain amount of debris is unavoidable. Therefore, preventative measures should be taken to ensure free drainage without stoppage. Most MIFAB drains are designed with maximum 3/8” openings, which allows only solids that are transportable through the drainage system. Sediment buckets or baskets may be used in areas such as washrooms and showers to intercept valuables and hair. Floor drains, area drains and catch basins which have indicated openings in their grates in excess of 3/8” should have secondary strainers or sediment buckets specified in areas where sediments may clog drain lines. Specification of sediment buckets in all MIFAB drainage products may be indicated by specifying suffix –5.

BACKFLOW PREVENTION / TRAP SEAL PRIMING

Backflow through floor drains, a most undesirable and sometimes damaging condition, due to either clogged interior drain lines or overloaded sewers, can be effectively retained through employment of backwater valves. The most common type of backwater valve used in floor drains is the swing check and float types; either of which with proper maintenance will perform effectively for the purpose intended. When selecting drains for locations below curb or street elevation, where gravity drainage to the main sewer is planned, backwater valves should be used in any locations where backflow conditions could develop. When considering backflow prevention, it is the logical time to also consider prevention of inflow of noxious sewer gas. Most codes specify that floor drains shall connect into a trap and that the trap seal be maintained to prevent the inflow of sewer gas. In locations where floor drains with integral traps or connected traps will be subject to infrequent use, evaporation with loss of trap seal is probable. Therefore such drains should be provided with trap seal primer connections, to permit hook-up of seal water replenishment piping from a trap seal primer valve to maintain the trap seal. Specify suffix -7

INDIRECT WASTE

In locations where equipment will be producing indirect waste such as condensation, which cannot be piped directly into the drainage system, the drainage is normally directed to a floor drain through discharge piping terminating above the drain. In these locations the floor drains should be equipped with funnels to direct the discharge into the drain and to avoid splashing. The remaining grate free area outside the funnel in such drains is open for normal floor drainage. Floor drains with funnels must not be installed in traffic areas. Round funnels accommodate drainage from a single indirect source, while oval funnels are designed to receive drawings from more than one source. MIFAB offers a broad range of independent funnels for attachment to floor drains of the specifier’s choice, and floor drains featuring funnels as standard equipment. These products merit consideration when specifications for handling indirect drainage in such locations are being developed.

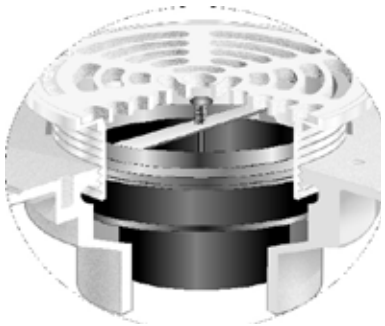

Backwater Valve Option -8

Funnels for Indirect Waste

Design and dimensions are subject to modification. Prices do not include applicable taxes. Visit **www.mifab.com** for the most recent product information.
MIFAB®, Inc., 1321 West 119th Street, Chicago, Illinois 60643-5109, USA Toll Free: 1-800-465-2736 • Fax: 1-773-341-3049
All sales subject to MIFAB’s® Terms & Warranties. Please refer to inside front cover. sales@mifab.com • Canada Toll Free: 1-800-387-3880

FLOOR DRAIN SELECTION GUIDE

TRAPPING OF SEDIMENTS

There are few, if any, floors and areas that are free of sediments, debris and bits of non-liquid waste that will gravitate to the floor areas. Such materials, if permitted to enter drains unchecked will lead to messy stoppage of the lines. Therefore, preventive measures should be taken to ensure free drainage without stoppage. MIFAB offers a complete range of sediment buckets for all applications (see details below). In addition, the specifier should consider that all of **MIFAB's area drains are engineered with 3/8"maximum openings in the grates to prevent large matter from entering the drains, thus often rendering the sediment bucket unnecessary. Elimination of sediment buckets in area drains can increase flow by 60%** since clogged sediment buckets are infrequently cleaned. Larger openings in grates often require sediment buckets that then clog and get thrown away, exposing the drainage system to unfiltered sediments, leading to expensive drain line maintenance. Sediment buckets may be used with MIFAB's floor drains in areas such as washrooms and showers to intercept valuables and hair. Choose Suffix-5 for the specification of sediment buckets. When sediment buckets are not available, a secondary dome strainer (Suffix-20) or a secondary flat strainer (Suffix-21) may be specified.

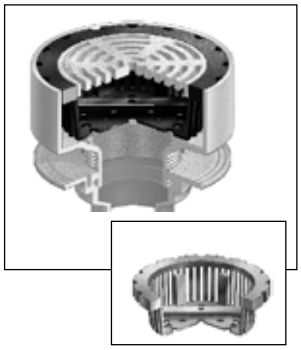

F1320-TFB
True-fit bucket design **ensures bucket replacement after cleaning since the top grate cannot be inserted unless the bucket is in place** because the grate is set into the bucket and the bucket suspends within the top assembly. Integral with F1320-TFB, F1340-TFB and F1360-TFB area drains.

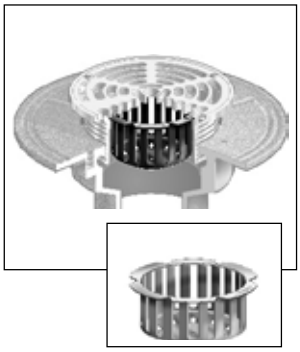

A1-PB
Stainless steel (A1-SSB) and plastic sediment buckets (A1-PB) are engineered to suspend from the inside ledge of floor drain strainer shanks.

F1320-TA
A1-MB
Cast iron (A1-MB) sediment buckets are engineered to suspend from the recessed, inside ledge, of the small area drain (F1300-TA, F1320-TA, F1420-TA) top assemblies. Stainless steel (A1-SSB) sediment buckets are also available for use with nickel bronze and stainless steel top assemblies.

F1340-TA
A2-MB
Cast iron (A2-MB) sediment buckets are engineered to suspend from the recessed, inside ledge, of the large area drain (F1340-TA, F1360-TA, F1440-TA, F1460-TA) top assemblies.

EXTENSIONS

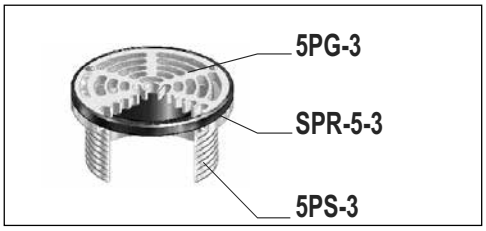

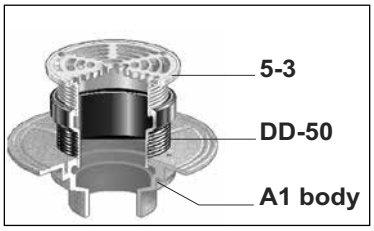

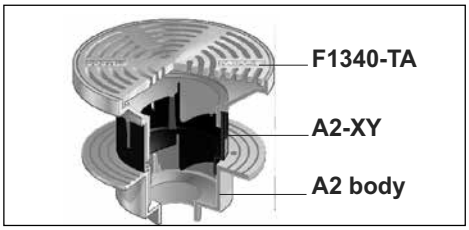

The SPR-5-3(-1 for NB) is used with 5-1 and 5-3 strainers to increase the height of the strainer to match discrepancies in the finished floor grade. Any number of rings can be added on top of each other. Each ring adds 3/8"of height. Simply remove the grate, place the SPR-5-3(-1 for NB) into the cast in place shank, and then screw the grate into the ring. Longer bolts are provided by MIFAB. **The vertical height of the strainer can be adjusted after the drain is poured in place.**

The DD-50 extension is used with A1 and A4 bodies to receive any strainer or cleanout top with a 4" N.P.S. shank. The DD-50 has an adjustment range of 1 1/2" to 2 5/8".

The A2-XY is used with A2 and A3 bodies to receive the F1340-TA, F1360-TA, F1440-TA and F1460-TA top assemblies. It has an adjustment range of 3 7/8" to 5 3/8". **The top assembly can be adjusted side to side to align with the floor tiles without changing vertical height.** This is a benefit in promenade areas where the installer must align square tiles with the drain top assembly. The A2-XY is independent of the body and the top assembly is independent of the A2-XY.

FLOOR DRAIN SELECTION GUIDE (Cont'd)

DRAIN OUTLET CONNECTIONS

Floor drains, are available in a variety of outlet connection types. The drain's outlet connection must be compatible with those of the drainage piping system to which it is connected. The most commonly employed connection types are as follows:

1. NO-HUB (NH) (Mechanical Joint)

The most widely used connection. A No-Hub connection is achieved by butting No Hub soil pipe or plastic pipe to the bottom of the drain and securing it with a NO HUB coupling. (MI-HUB and MI-XHUB no hub couplings are available from MIFAB - see page 121). Unless specified otherwise, all of MIFAB drains are shipped standard with No-Hub connections.

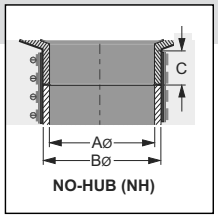

NO-HUB (NH)

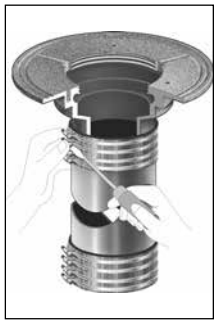

	A	B
2" No hub outlet	2"	2 3/8"
3" No hub outlet	3"	3 3/8"
4" No hub outlet	4"	4 3/8"
5" No hub outlet	5"	5 3/8"
6" No hub outlet	6"	6 3/8"
8" No hub outlet	8"	8 3/8"
10" No hub outlet	10"	10 1/2"
12" No hub outlet	12"	12 1/2"

3. THREADED (T)

MIFAB Iron Pipe Threaded connection is an old industry standard. The female (NPT) threaded outlet is often specified on industrial and institutional applications. Specify suffix T for MIFAB's threaded connection.

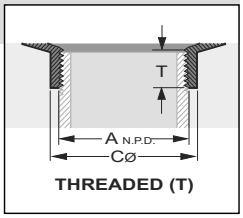

THREADED (T)

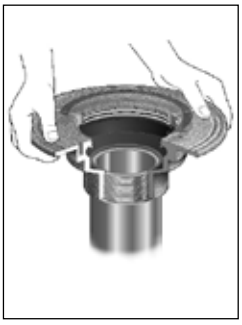

	A	B	C
2" Threaded outlet	2"	3 1/4"	9/16"
3" Threaded outlet	3"	4 1/2"	3/4"
4" Threaded outlet	4"	5 5/8"	15/16"
5" Threaded outlet	5"	6 3/4"	15/16"
6" Threaded outlet	6"	7 3/4"	15/16"
8" Threaded outlet	8"	9 3/8"	1 1/8"

2. PUSH-ON (P)

MIFAB "Push-on" is a unique labor saving compression gasketed connection designed to simply push on the stub end of the pipe. The Push-on drain body and gasket can be utilized with plastic, steel, No-Hub and service weight soil pipe. A unique pipe stop cast in each MIFAB Push-on drain body ensures that water will not accumulate around the connecting pipe. Specify suffix P for MIFAB's Push-on connections.

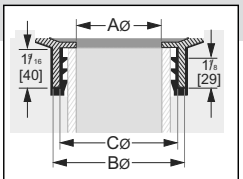

PUSH-ON (P)

	A	B	C
2" Push on outlet	2"	2 3/8"	3"
3" Push on outlet	3"	4 3/8"	4"
4" Push on outlet	4"	5 1/2"	5 1/8"
6" Push on outlet	6"	7 3/4"	6 1/4"

SPECIAL NOTE:
MIFAB "Push-on" gaskets are designed for use exclusively with MIFAB drainage products. They are not sold separately and all warranties either expressed or implied would be forfeited if used in other than a MIFAB drainage product. MIFAB's 2", 3" and 4" gaskets are designed to be used with both PVC and service weight (cast iron) pipe.

4. INSIDE CAULK (X)

The Inside Caulk drain outlet connection is a bottomless hub into which the drainage pipe is inserted. The bottom of the outlet is sealed with oakum in the annular space between the pipe and the hub and the connection is then sealed with melted lead. Inside caulk connections are compatible with No-Hub, service weight and extra heavy soil pipe. They can also be used with ABS and PVC pipe. Specify suffix X for MIFAB's inside caulk connections.

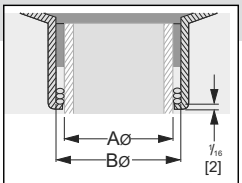

INSIDE CAULK (X)

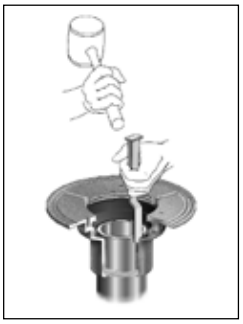

	A	B
2" Inside Caulk outlet	2 5/8"	3 1/16"
3" Inside Caulk outlet	3 3/4"	4 3/16"
4" Inside Caulk outlet	4 3/4"	5 3/16"
5" Inside Caulk outlet	5 3/4"	6 3/16"
6" Inside Caulk outlet	6 3/4"	7 3/16"
8" Inside Caulk outlet	8 7/8"	9 1/2"

5. PVC/ABS Socket (PVC -30, ABS -31)

Socket weld connections are proven installation time saver solutions. They provide a sanitary and resistant connection to the piping system for specialized applications.

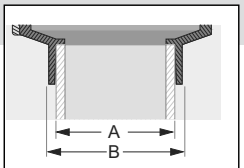

ABS/PVC Socket

	A	B
2" PVC / ABS Socket	2.385"	2.710"
2" PVC / ABS Socket	3.525"	3.916"
2" PVC / ABS Socket	4.475"	4.950"

All sales subject to MIFAB's Terms and Warranties. Please refer to inside front cover.

MIFAB® TYPICAL FLOOR DRAIN INSTALLATIONS

SHOWER ROOM DRAIN

Shower drains are available with round, square or rectangular grates of different sizes to provide the drainage capacity or shape desired. This drain is provided with a seepage flange and clamping means to secure the waterproofing membrane to the floor drain body. The strainer is vertically adjustable to allow for variations in finished floor thickness. The strainer at floor level is an attractive polished Stainless Steel, suffix -3. Polished Nickel Bronze, suffix –1 is optional.

F1000-C

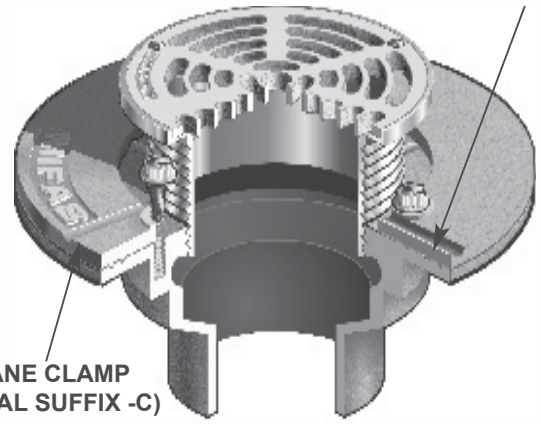

UNIVERSAL FLOOR DRAIN

Too often, a shower drain is selected for use in areas where the traffic load (either pedestrian or vehicular) may be unknown and too heavy for a shower drain grate. We have developed a universal floor drain that is suitable for use in shower or toilet rooms as well as any other finished or unfinished floor area. It is furnished with a round or square heavy duty stainless steel grate, to prevent dishing. Some of the optional variations available on the basic floor drain are a trap primer tapping, internal sediment bucket, internal backwater valves and top funnels for use as an indirect waste drain.

F1000

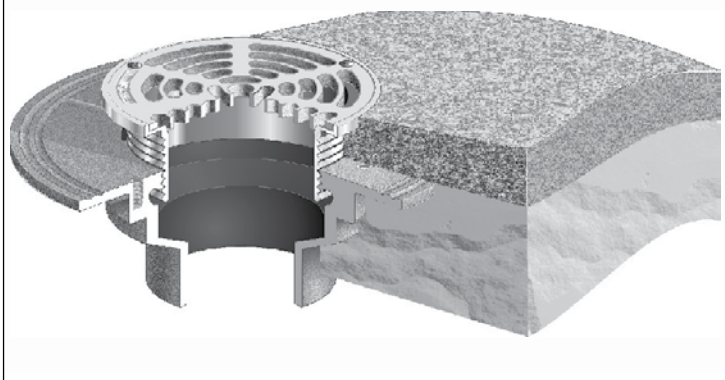

INDIRECT WASTE DRAIN

The F1100-EG version is shown here with an oblong funnel to provide an indirect waste connection. Open site or drip drains are primarily for condensate producing equipment and other mechanical equipment where a direct connection is not desired or permitted. The funnels are available in a round design for a single pipe waste and in oblong sizes for multi-pipe waste lines.

F1000-EG

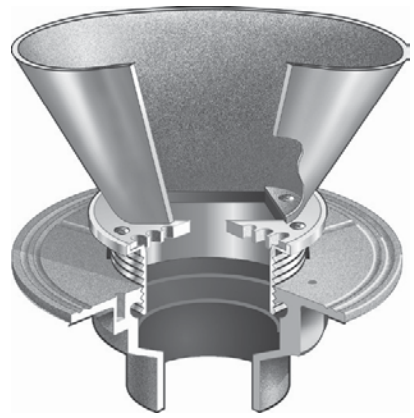

MIFAB® TYPICAL FLOOR DRAIN INSTALLATIONS (Cont'd)

F1320

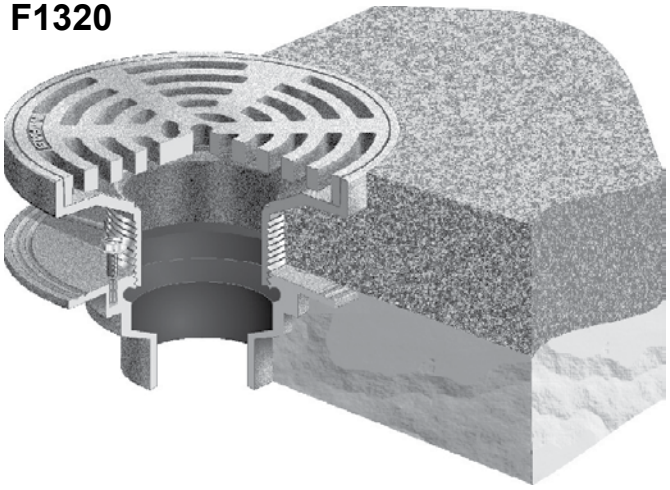

GENERAL PURPOSE FLOOR DRAIN
This floor drain is suitable for any application where traffic loads and waste water flows are expected. This drain has provision for securing water- proofing membranes to the drain body and provides for final vertical adjustment to finished floor level by the adjustable body collar. Optional variations such as a sediment bucket to retain debris and round or square polished grates and top frames are available.

F1140C

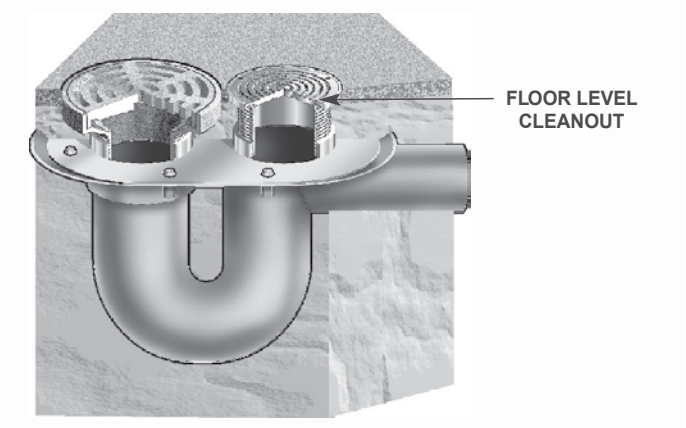

INTEGRAL TRAP FLOOR DRAIN
One of the most practical floor drains to be developed is a floor drain with an integral deep seal trap and No Hub side outlet connection. This drain is ideal for use in floor areas built on grade where the sewer line is shallow. The drain body has a floor level cleanout opening and may be supplied with such optional variations as a sediment bucket, seepage or anchoring flange and an internal backwater valve for backflow protection.

F1000-FC

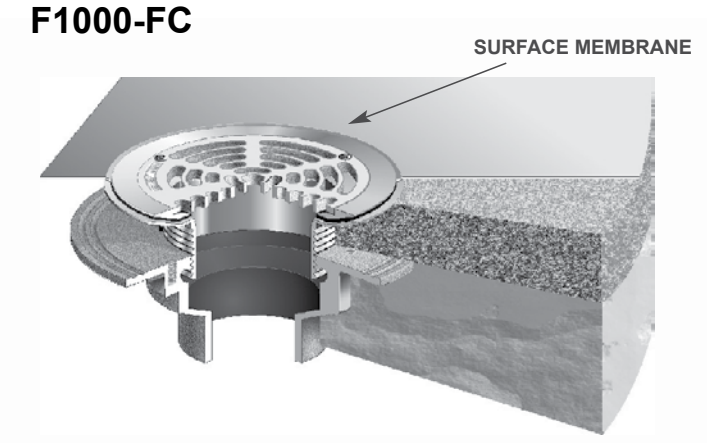

FLOOR DRAIN WITH SURFACE MEMBRANE CLAMP
This type of floor drain is designed for installation where a water-proof seal is required at the top level of the grate. The adjustable strainer has a two piece beveled nickel bronze top which clamps the top flashing material securely to the drain to ensure a water tight joint.

Design and dimensions are subject to modification. Prices do not include applicable taxes. Visit **www.mifab.com** for the most recent product information.
MIFAB®, Inc., 1321 West 119th Street, Chicago, Illinois 60643-5109, USA
Toll Free: 1-800-465-2736 • Fax: 1-773-341-3049
sales@mifab.com • Canada Toll Free: 1-800-387-3880
All sales subject to MIFAB's® Terms & Warranties. Please refer to inside front cover.

MIFAB® TYPICAL FLOOR DRAIN INSTALLATIONS (Cont'd)

PIT DRAIN

This type of drain is used in elevator pits, pools and trenches where a side wall outlet is required. The angle grate is located in the wall to prevent blockage by debris. It is supplied with a gasketed seal type backwater valve to prevent backflow of waste water into the pit or sump being drained.

BV1210

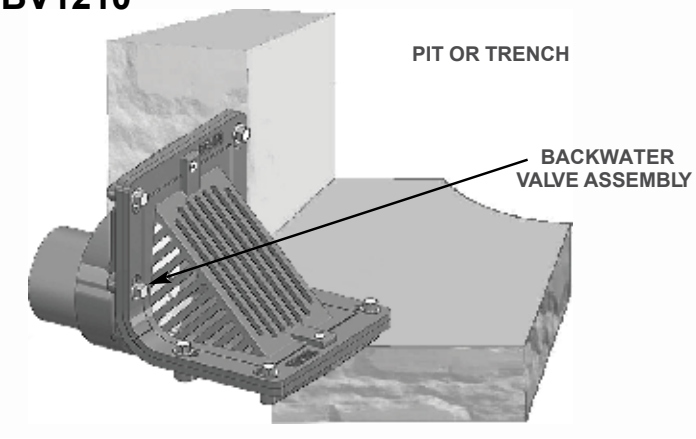

WIDE FLANGE DECK DRAIN

Special drains are available for thin deck or floor covering. A 4" wide flange, which is recessed the same thickness as the deck covering, provides a large bearing surface for the bonding of the neoprene, latex or similar waterproof deck material. This type of deck finish is used in traffic areas such as promenade decks, plazas, recreation areas and interior floors.

F1100-Z

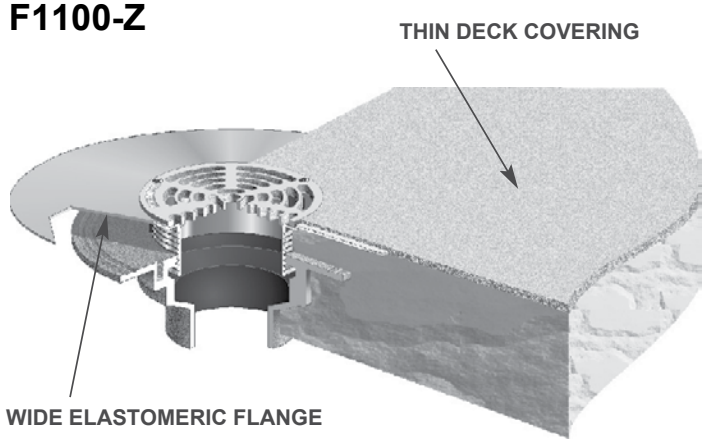

FLUSHING RIM FLOOR DRAIN

A flushing rim floor drain is desirable in mortuaries, prison wards, hospitals, sanatoriums and veterinary establishments where sanitary wastes are to be disposed through a floor drain. The interior surface of this type of drain is coated to provide maximum sanitation. The flushing connection enters the body to provide a peripheral washing action on the entire inner surface to dispose of sanitary waste matter. Several types of grates are available. A perforated hinged grate is recommended to intercept solids while disposing of fluids. A loose-set or secured "oriental" bar-type grate would be used in areas where both solid and fluid wastes are to be discharged.

F1650

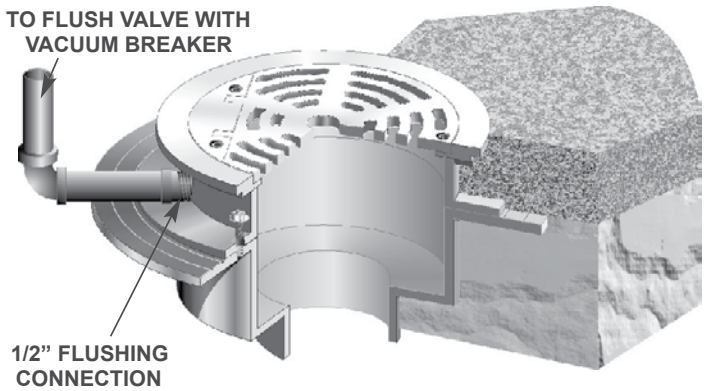

MIFAB® TYPICAL FLOOR DRAIN INSTALLATIONS (Cont'd)

F1350-Y-36

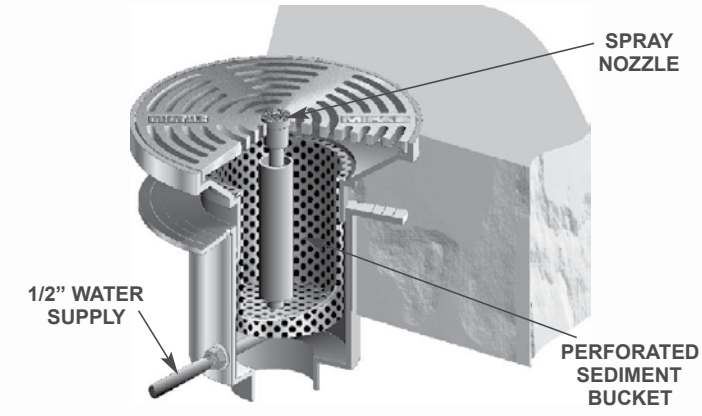

GARBAGE CAN WASHING DRAIN

This type of drain is designed to serve as a combination floor drain and garbage can washer. The drain is furnished with a spray nozzle that is designed to thoroughly scour the inside of garbage cans. The top grate and large sediment bucket intercept waste debris washed down from the cans. A 1/2" water supply connection is provided on the side of the drain body to accommodate hot, cold or mixed spray water.The water supply should be connected through a vacuum breaker and control valve easily accessible to the cleaning personnel. (See catalog page 80, F1670)

F1580

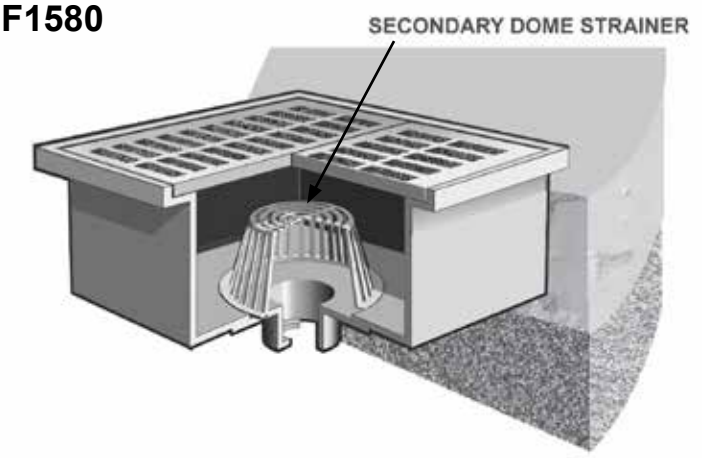

HEAVY DUTY ROADWAY DRAIN

This drain is recommended for use in outside areas in yards, airports and parking areas that are subject to heavy vehicular traffic and where a large drainage capacity is required due to rainfall. The standard heavy duty cast iron grate has a maximum load capacity of 12,000 lbs. If specified with a Ductile Iron grate, the load capacity would be in excess of 25,000 lbs.

F1830-P

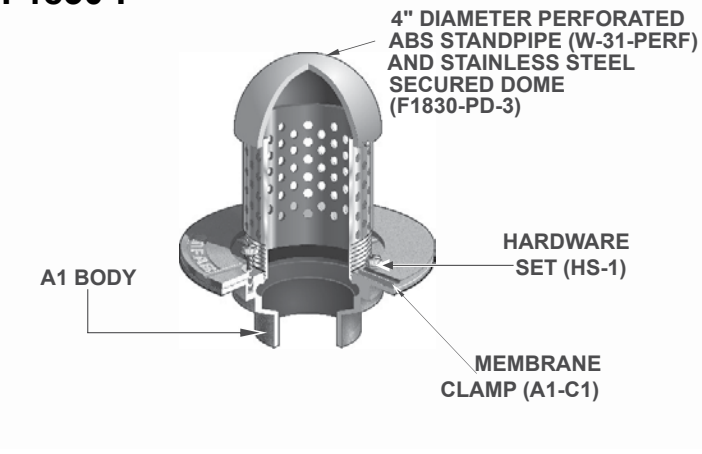

PLANTING AREA DRAIN

Although a planting area drain may not be considered a true floor drain, we have included it in this catalog. It is designed for use in planting areas or flower boxes indoors or out where drainage of excess moisture is required without loss of the soil. The perforated adjustable standpipe and dome may be located as shown or ordered long enough to extend to finished grade level to provide easy access for rodding if the occasion occurs. The floor drain body is designed to provide a means to secure the planter floor pan or waterproofing membrane to the drain.

Design and dimensions are subject to modification. Prices do not include applicable taxes. Visit **www.mifab.com** for the most recent product information.
MIFAB®, Inc., 1321 West 119th Street, Chicago, Illinois 60643-5109, USA
Toll Free: 1-800-465-2736 • Fax: 1-773-341-3049
sales@mifab.com • Canada Toll Free: 1-800-387-3880
All sales subject to MIFAB's® Terms & Warranties. Please refer to inside front cover.

FLOOR DRAIN, ROOF DRAIN AND CLEANOUT MODEL NUMBER STRUCTURE

ROOF DRAINS

(R1200 Series as the example)

1) Outlet connection size is always stated by the last of the four digits in the model number.
For example: R1204. The 4 indicates a 4” no hub outlet connection. If there is no letter following the fourth digit, then the outlet connection is no hub (most common). Alternative outlet connection types, P (push on), T (threaded), X (inside caulk), -28 (Type 304 stainless steel), -29 (Type 316 stainless steel), -30 (PVC outlet connection) or –31 (ABS outlet connection) would follow next.
For example: R1204P. The P indicates a 4” push on outlet connection.
For example: R1204-30. The -30 indicates a 4” PVC outlet connection.

2) Roof Drain Series is always stated next by the suffix following the outlet size and type.
For example:, R1204-30-EU. The –EU indicates that this is the –EU Series roof drain.
The R1200 Series roof drain has the following standard Series of drains: -BUV, -EU, -F, -G, -HC, -JC, -PR, -PR15, -R, -RS, -W, -Z and –90 (found on pages 127 through 138 of the price book)

3) Alpha, then, numeric options follow the roof drain Series.
For example, R1204-30-EU-B-M-80-6. The –B and –M-80 (-M-80 is one option (low profile aluminum dome and should not be separated) are in alpha order following the Series (-EU) followed by the –6 option in numeric order.

FLOOR DRAINS

(F1100 Series as the example)

1) Outlet connection size is always stated by the last of the four digits in the model number.
For example: F1103-C-5-1. The 3 indicates a 3” no hub outlet connection.
See same explanation as in the Roof Drain section for the other outlet connection variables.

2) Clamp ring or no Clamp ring? is always stated after the outlet size and type.
For example, F1103-30-C-5-1. The –C indicates that there is a clamp ring.
F1103-30-5-1. Indicates that there is no clamp ring.

3) Size (type) and material finish of strainer is always stated after the clamp ring suffix (or outlet type and size if no –C).

For example, F1103-30-C-5-1. The –5-1 indicates that the strainer is 5” round and that it is nickel bronze material.
For example, F1103-30-C-S6-3. The –S6-3 indicates that the strainer is 6” x 6” square and that it is stainless steel material.
For example, F1444-175-3-5-13. The -175-3 indicates that the strainer has a three quarter grate with a stainless steel veneer. The -5 indicated that the drain has a sediment bucket and the -13 indicates that the body and sediment bucket are galvanized.

4) Numeric options then follow
For example, F1103-30-C-5-1-5-6-15.
The second -5 indicates a sediment bucket, the -6 indicates security screws and the -15 indicates an extension.

CLEANOUTS

(C1100 Series as the example)

1) Outlet connection size is always stated by the last of the four digits in the model number
For example: C1104-R-1. The 4 indicates a 4” no hub outlet connection.
See same explanation as in the Roof Drain section for the other outlet connection variables.

2) Size (type) and material finish of cover is always stated after the outlet size.
For example, C1104-R-1. The –R-1 indicates that the cover is 5” round and that it is nickel bronze material.
For example, C1104-S-3. The –S-3 indicates that the cover is 5” x 5” square and that it is stainless steel material.

3) Numeric options then follow
For example, C1104-R-1-6.
The -6 indicates security screws.

FLOOR DRAINS

F1102,3,4-C-TS TOP SET® FINISHED FLOOR DRAIN

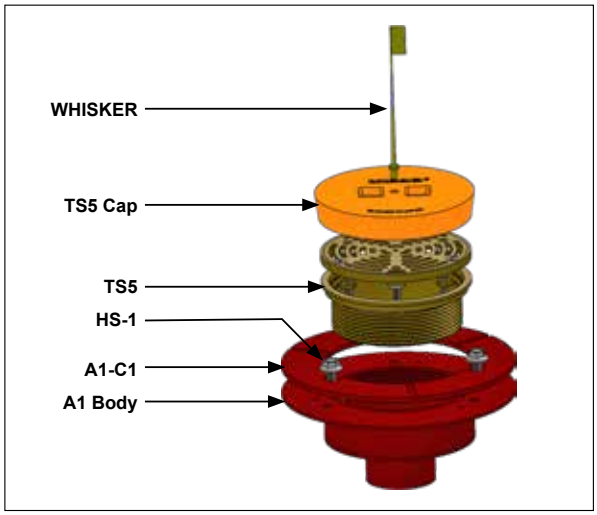

The patent pending MIFAB Top Set® finished floor drain ships complete with a ½" thick plastic cover to protect the strainer during the concrete pour. The installer "shoots their level" to the top of the plastic cover and pours the concrete to the top level of the plastic cap. Channel locks are used to remove the cover after the concrete pour has settled. Then, an allen key screwdriver can be used to engage the three screws located underneath the finished grate. Turn the screws the same amount to elevate the strainer up to the finished floor level. Turn the screws a different amount each to tilt the strainer to the same angle as the finished floor.

ADVANTAGES OF THE TOP SET® FLOOR DRAIN:

- Plastic cover protects the grate during the concrete pour.
- Adjustment after the pour is easy – no need to waste time to find the finished floor strainer – it is already included in the Top Set® floor drain assembly.
- Ability to tilt the strainer to match the uneven finished floor level.

A1 BODY HEIGHT

PIPE SIZE	NO HUB (STANDARD)	PUSH ON (P)	THREADED (T)	INSIDE CAULK (X)	PVC (-30) ABS (-31)
2"	3"	3 3/8"	2 1/4"	3 3/4"	2 5/8"
3"	3"	3 3/8"	2 5/8"	3 3/4"	3 1/4"
4"	3"	3 3/8"	2 5/8"	3 1/2"	3 1/2"
5"	3"	-	2 5/8"	6 7/8"	-
6"	3 1/2"	6 7/8"	-	-	-

STRAINER ADJUSTMENT			ANSI/ASME RATING	
STRAINER	MIN	MAX	FREE AREA	LOAD RATING
5" DIA	1/2"	2 1/2"	8 IN²	2000 lbs
6" DIA	11/16"	2 1/2"	9 IN²	2000 lbs

F1100-C-TS SERIES

MODEL NUMBER	WT. Lbs.	STRAINER DIAMETER	LIST PRICE NICKEL BRONZE (-1) STAINLESS STEEL (-3)
F1102,3,4-C-TS5	7.00	5"	$ 632.00
F1102,3,4-C-TS6	7.50	6"	$ 771.00

PARTS (*) Denotes strainer diameter (5" or 6")

A1 BODY | TS(*)-1 | A1-C1 | HS-1

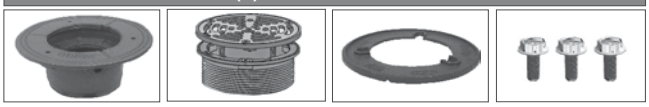

WHEN NO MEMBRANE CLAMP IS REQUIRED, DELETE SUFFIX (-C) AND DEDUCT **$103.00** • ***See Page 37 for Optional Variations**

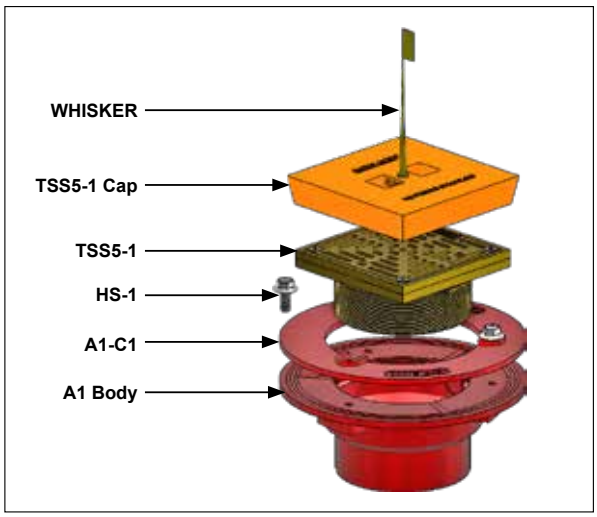

DYNAC

(DO YOU NEED A CLAMP?)

In 90% of today's "slab on grade" installations, there is no need for a membrane clamp, as there is no waterproofing membrane installed. Because MIFAB's unique design allows the strainer assembly to install directly into the throat of the drain body, the use of a membrane clamping collar is optional.

This is an opportunity for cost savings.

Why use a drain with a membrane clamp if it is not neccessary?

F1100-C-TSS SERIES

MODEL NUMBER	WT. Lbs.	STRAINER DIAMETER	LIST PRICE NICKEL BRONZE (-1) STAINLESS STEEL (-3)
F1102,3,4-C-TSS5	8.00	5" x 5"	$ 841.00
F1102,3,4-C-TSS6	10.50	6" x 6"	$ 937.00

PARTS (*) Denotes strainer size (5"x 5",6"x 6",8"x 8" 10"x 10")
(**r Denotes strainer finish (-1 ,-3 or -4)

A1 BODY | TSS(*)-(**) | A1-C1 | HS-1

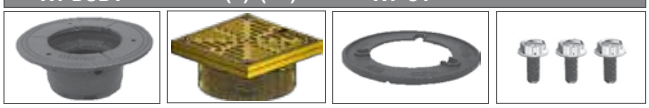

Design and dimensions are subject to modification. Prices do not include applicable taxes. Visit **www.mifab.com** for the most recent product information.
MIFAB®, Inc., 1321 West 119th Street, Chicago, Illinois 60643-5109, USA Toll Free: 1-800-465-2736 • Fax: 1-773-341-3049
All sales subject to MIFAB's® Terms & Warranties. Please refer to inside front cover. sales@mifab.com • Canada Toll Free: 1-800-387-3880

F1000-C / F1100-C — FLOOR DRAIN WITH ROUND ADJUSTABLE STAINLESS STEEL STRAINER
F1000-C / F1100-C — FLOOR DRAIN WITH ROUND ADJUSTABLE NICKEL BRONZE STRAINER

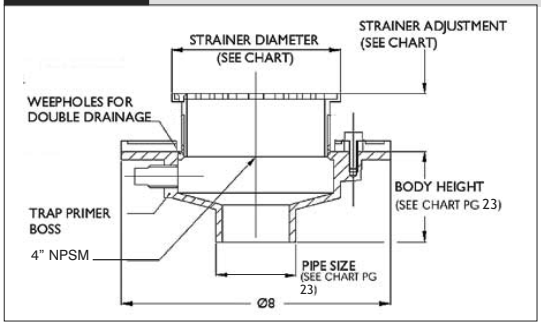

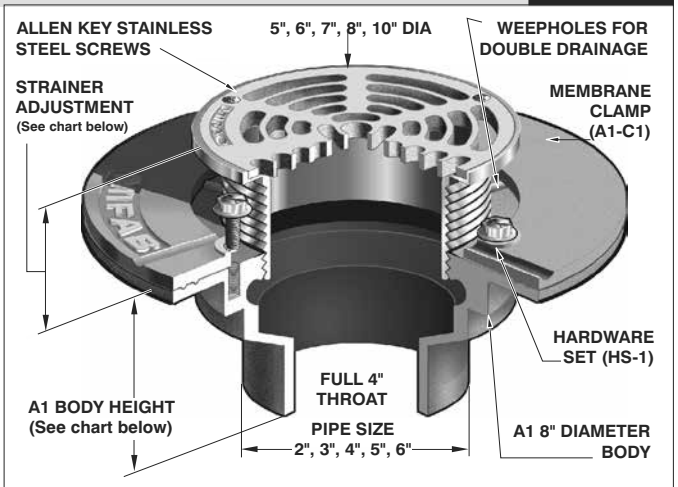

(See page 23 for photo of A1-6NH-7 body)

A1 BODY HEIGHT

PIPE SIZE	NO HUB (STANDARD)	PUSH ON (P)	THREADED (T)	INSIDE CAULK (X)	PVC (-30) ABS (-31)
2"	3"	3 3/8"	2 1/4"	3 3/4"	2 5/8"
3"	3"	3 3/8"	2 5/8"	3 3/4"	3 1/4"
4"	3"	3 3/8"	2 5/8"	3 1/2"	3 1/2"
5"	3"	-	2 5/8"	6 7/8"	-
6"	3 1/2"	6 7/8"	-	-	-

STRAINER ADJUSTMENT — ANSI/ASME RATING-1 — NICKEL BRONZE (-1) STAINLESS STEEL (-3)

STRAINER	MIN	MAX	FREE AREA	LOAD RATING	LOAD RATING
5" DIA	1/2"	1 1/2"	8 IN^2	2000 lbs	5000 - 7499 lbs.
6" DIA	11/16"	1 1/2"	9 IN^2	2000 lbs	5000 - 7499 lbs.
7" DIA	9/16"	1 9/16"	12 IN^2	2000 lbs	5000 - 7499 lbs.
8" DIA	11/16"	2 1/4"	18 IN^2	2000 lbs	5000 - 7499 lbs.
10" DIA	11/16"	2 1/4"	26 IN^2	2000 lbs	5000 - 7499 lbs.

F1000-C / F1100-C SERIES — LIST PRICE

MODEL NUMBER	WT. Lbs.	STRAINER DIAMETER	STAINLESS STEEL (-3) NICKEL BRONZE (-1)	DUCTILE IRON (-4)
F1002,3,4-C-5 / F1102,3,4-C-5	7.00	5"	$ 632.00	$ 555.00
F1002,3,4-C-6 / F1102,3,4-C-6	7.50	6"	$ 771.00	-
F1002,3,4-C-7 / F1102,3,4-C-7	8.00	7"	$ 887.00	$ 742.00
F1002,3,4-C-8 / F1102,3,4-C-8	9.00	8"	$ 1110.00	$ 916.00
F1002,3,4-C-10 / F1102,3,4-C-10	10.00	10"	$ 1579.00	-

WHEN NO MEMBRANE CLAMP IS REQUIRED, DELETE SUFFIX (-C) AND DEDUCT **$103.00**

(*) Denotes strainer diameter (5", 6", 7", 8", or 10")

PARTS

A1 BODY (*) -1

A1-C1 **HS-1**

DYNAC

(DO YOU NEED A CLAMP?)

In 90% of today's "slab on grade" installations, there is no need for a membrane clamp, as there is no waterproofing membrane installed. Because MIFAB's unique design allows the strainer assembly to install directly into the throat of the drain body, the use of a membrane clamping collar is optional.

This is an opportunity for cost savings.
Why use a drain with a membrane clamp if it is not neccessary?

F1000-C AND F1100-C OPTIONAL VARIATIONS:

SUFFIX	DESCRIPTION	LIST PRICE	SUFFIX	DESCRIPTION	LIST PRICE
-3	Type 304 Stainless Steel Strainer	**No Add**	-95	Client logo (-3 only)	$ 1175.00
-5	Sediment bucket (A1-PB)	$ 144.00	-C2	High rough-in membrane clamp (A1-C2)	$ 103.00
-6	Security screws (TR25 Torx and pin) (H-1039A)	$ 79.00	-F4-(1,3)	4" NB or SS round funnel	$ 583.00
-7	Trap seal primer tapping	**Standard**	-F4-50	4" cast iron round funnel	$ 247.00
-7MG	MI-GARD, Floor Drain Trap Seal	**See TSP book**	-F6-(1,3)	6" NB or SS round funnel	$ 862.00
-8	Backwater valve (BV1250 Series) (2", 3", 4")	$ 497.00	-F6-50	6" cast iron round funnel	$ 395.00
-10	Decorative polished top	$ 221.00	-G-(1,3)	4" x 9" NB or SS oval funnel	$ 1204.00
-11	Acid resistant epoxy coated body (and clamp if needed)	$ 343.00	-G-50	4" x 9" C.I. oval funnel	$ 583.00
-13	Galvanized body (and clamp if needed)	$ 259.00	-HP	Heel Proof grate, 1/4" wide slots	**No Add**
-15	Extension (DD-50)	$ 185.00	-J-(1,3)	3" x 1" NB or SS oval funnel	$ 607.00
-21	Secondary flat strainer (FD-9600 Series)	$ 78.00	-J-50	3" x 1" cast iron oval funnel	$ 276.00
-28	Stainless Steel Body (Type 304) (2", 3", 4" No Hub only)	$ 1581.00	P	Push on outlet (2", 3" or 4")	**No Add**
-30	PVC Socket Connection Body (2", 3" or 4")	**No Add**	T	Threaded outlet (2", 3" or 4")	$ 107.00
-31	ABS Socket Connection Body (2", 3" or 4")	**No Add**	-Z	Extended wide elastomeric flange on top (use Z5 or ZS top)	$ 1724.00
-34	Closure plug (C1440 Series)	$ 477.00	X	Inside caulk outlet (2", 3" or 4")	**No Add**
-40	Underdeck clamp (A1-C3)	$ 196.00	5	5" no hub outlet	$ 707.00
-41	Sump receiver (A1-BP)	$ 337.00	5T	5" threaded outlet	$ 707.00
-49	Chrome plated strainer assembly (add to -1 only)	$ 59.00	5X	5" inside caulk outlet	$ 707.00
-69	Stainless steel sediment bucket (A1-SSB)	$ 279.00	6	6" no hub outlet	$ 707.00
-90	Threaded side outlet (2", 3") (N/A -30, -31) No Add for -NH	$ 287.00	6P	6" push on outlet*	$ 707.00
	4" threaded side outlet (N/A -30, -31) No Add for -NH	$ 535.00			

* Specify POG-6 for C.I. pipe and POG-6-PVC for PVC pipe. 2", 3", 4" sizes use same gasket. * Add -NH to -90 for no hub outlet - **No Add**

FLOOR DRAINS

F1100-C-AS FLOOR DRAIN WITH ADJUSTABLE ANGLE STRAINER F1100-C-AS

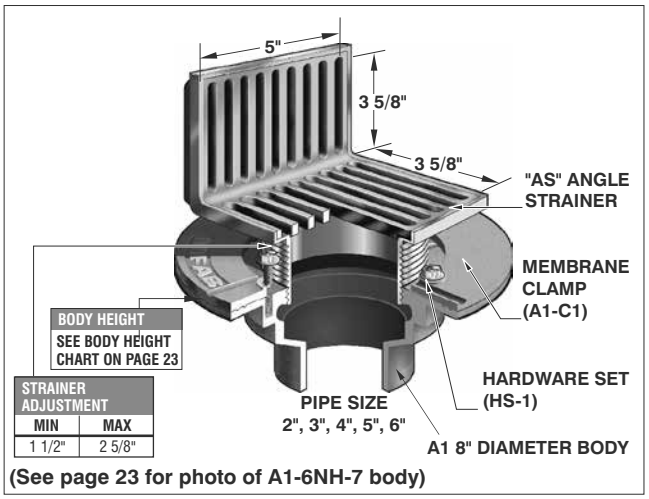

(See page 23 for photo of A1-6NH-7 body)

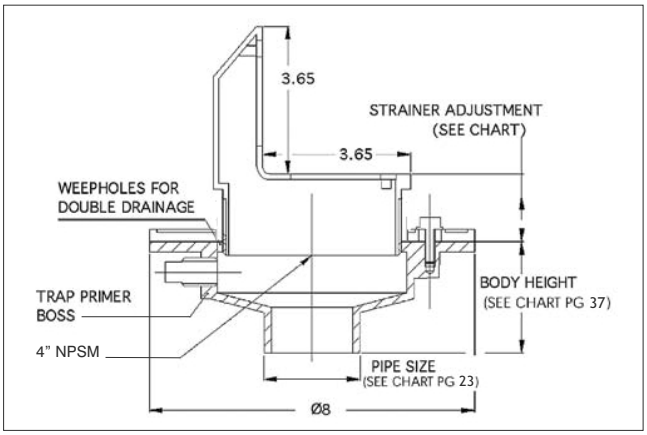

PARTS

A1 BODY	AS-1	A1-C1	HS-1

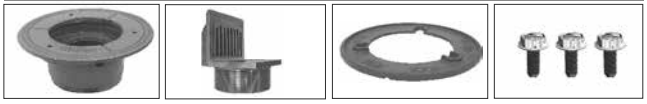

FLOOR DRAIN WITH ADJUSTABLE ANGLE STRAINER			
MODEL NUMBER	WT. Lbs	STRAINER SIZE	NICKEL BRONZE (-1)
F1102, 3, 4-C-AS	10.00	4" x 5" x 4"	$ 2688.00

WHEN NO MEMBRANE CLAMP IS REQUIRED, DELETE SUFFIX (-C) AND DEDUCT **$103.00**

F1100-C-AS, F1100-C-DD, F1100-C-EF, and F1100-C-EG OPTIONAL VARIATIONS: CONTINUE

SUFFIX	DESCRIPTION	LIST PRICE	SUFFIX	DESCRIPTION	LIST PRICE
-5	Sediment bucket (A1-PB)	$ 144.00	-21	Secondary flat strainer (FD-9600 Series)	$ 78.00
-6	Security screws (TR25 Torx and pin) (H-1039A)	$ 79.00	-28	Stainless Steel Body (Type 304) (2", 3", 4" No Hub only)	$ 1581.00
-7	Trap seal primer tapping	Standard	-30	PVC Socket Connection Body (2", 3" or 4")	No Add
-7MG	MI-GARD, Floor Drain Trap Seal	See TSP book	-31	ABS Socket Connection Body (2", 3" or 4")	No Add
-8	Backwater valve (BV1250 Series) (2", 3", 4")	$ 497.00	-34	Closure plug (C1440 Series)	$ 477.00
-10	Decorative polished top	$ 221.00	-40	Underdeck clamp (A1-C3)	$ 196.00
-11	Acid resistant epoxy coated body (and clamp if needed)	$ 343.00	-41	Sump receiver (A1-BP)	$ 337.00
-13	Galvanized body (and clamp if needed)	$ 259.00	-49	Chrome plated strainer assembly (add to -1 only)	$ 59.00
-15	Extension (DD-50)	$ 185.00			

PVC/ABS SOCKET BODIES AVAILABLE FOR 2", 3" OR 4" CONNECTION SIZES SEE NEXT PAGE FOR MORE OPTIONS.

F1100-C-DD FLOOR DRAIN WITH ADJUSTABLE HUB INDIRECT WASTE STRAINER F1100-C-DD

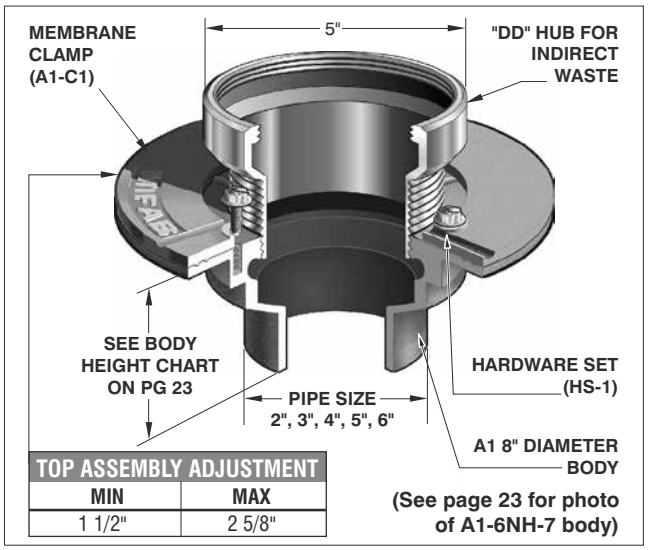

(See page 23 for photo of A1-6NH-7 body)

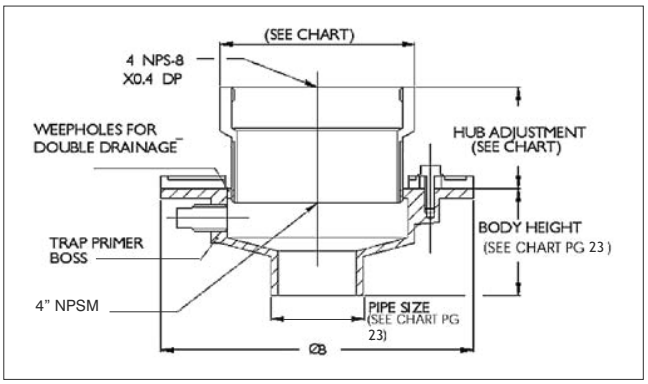

PARTS

A1 BODY	DD-(*)

(*) DENOTES STRAINER FINISH (-1, -3 OR -50)

A1-C1	HS-1

FLOOR DRAIN WITH ADJUSTABLE HUB INDIRECT STRAINER				
MODEL NUMBER	WT. Lbs	STRAINER SIZE	LIST PRICE: NICKEL BRONZE (-1) STAINLESS STEEL (-3)	LIST PRICE CAST IRON (-50)
F1102,3,4-C-DD	8.50	HUB DRAIN	$ 598.00	-
F1102,3,4-C-DD-50	8.50	HUB DRAIN	-	$ 440.00

WHEN NO MEMBRANE CLAMP IS REQUIRED, DELETE SUFFIX (-C) AND DEDUCT **$103.00**

F1100-C-EF FLOOR DRAIN WITH ROUND ADJUSTABLE STRAINER AND 4" FUNNEL F1100-C-EF

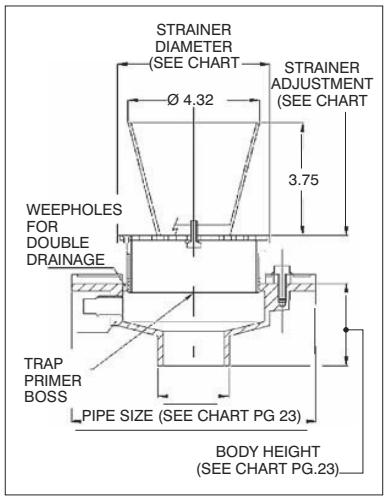

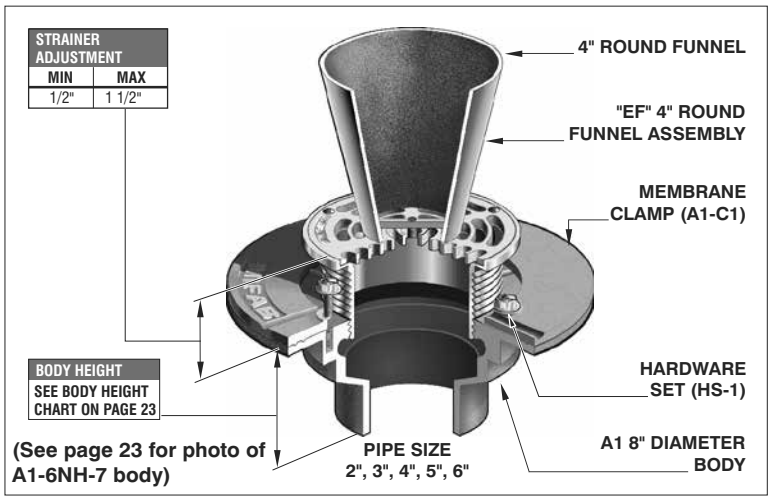

PARTS

EF-(*)

A1 BODY

A1 - C1

HS-1

FLOOR DRAIN WITH ADJUSTABLE 4" DIA. FUNNEL STRAINER

MODEL NUMBER	WT. Lbs	STRAINER SIZE	LIST PRICE: NICKEL BRONZE (-1) STAINLESS STEEL (-3)	LIST PRICE CAST IRON (-50)
F1102,3,4-C-EF	8.50	5" DIA	$ 1215.00	-
F1102,3,4-C-EF-50	8.50	5" DIA	-	$ 801.00

WHEN NO MEMBRANE CLAMP IS REQUIRED, DELETE SUFFIX (-C) AND DEDUCT **$103.00**

(*) DENOTES STRAINER FINISH (-1, -3, -50)

F1100-C-AS, F1100-C-DD, F1100-C-EF, and F1100-C-EG OPTIONAL VARIATIONS: CONT FROM Page 38

SUFFIX	DESCRIPTION	LIST PRICE	SUFFIX	DESCRIPTION	LIST PRICE
-69	Stainless steel sediment bucket (A1-SSB)	$ 279.00	-J-(1,3)	3" x 1" NB or SS oval funnel	$ 607.00
-90	Threaded side outlet (2", 3") (N/A -30, -31) No Add for -NH	$ 287.00	-J-50	3" x 1" cast iron oval funnel	$ 276.00
	4" threaded side outlet (N/A -30, -31) No Add for -NH	$ 535.00	P	Push on outlet (2", 3" or 4")	No Add
-95	Client logo (-3 only)	$ 1175.00	T	Threaded outlet (2", 3" or 4")	$ 107.00
-C2	High rough-in membrane clamp (A1-C2)	$ 103.00	-Z	Extended wide elastomeric flange on top (use Z5 or ZS top)	$ 1724.00
-F4-(1,3)	4" NB or SS round funnel	$ 583.00	X	Inside caulk outlet (2", 3" or 4")	No Add
-F4-50	4" cast iron round funnel	$ 247.00	5	5" no hub outlet	$ 707.00
-F6-(1,3)	6" NB or SS round funnel	$ 862.00	5T	5" threaded outlet	$ 707.00
-F6-50	6" cast iron round funnel	$ 395.00	5X	5" inside caulk outlet	$ 707.00
-G-(1,3)	4" x 9" NB or SS oval funnel	$ 1204.00	6	6" no hub outlet	$ 707.00
-G-50	4" x 9" C.I. oval funnel	$ 583.00	6P	6" push on outlet*	$ 707.00
-HP	Heel Proof grate, 1/4" wide slots	No Add			

* Specify POG-6 for C.I. pipe and POG-6-PVC for PVC pipe. 2", 3", 4" sizes use same gasket.
* Add -NH to -90 for no hub outlet - No Add.

F1100-C-EG FLOOR DRAIN WITH ROUND STRAINER AND 4"x 9" ELONGATED FUNNEL F1100-C-EG

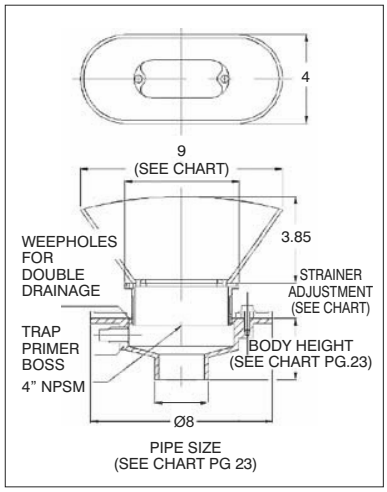

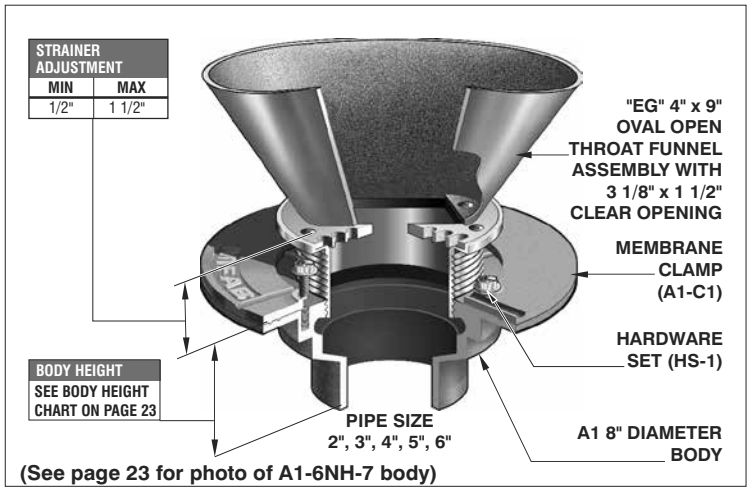

PARTS

EG-(*)

A1 BODY

A1-C1

HS-1

FLOOR DRAIN WITH ADJUSTABLE 4" x 9" FUNNEL INDIRECT STRAINER

MODEL NUMBER	WT. Lbs	STRAINER SIZE	LIST PRICE: NICKEL BRONZE (-1) STAINLESS STEEL (-3)	LIST PRICE CAST IRON (-50)
F1102,3,4-C-EG	9.00	5" DIA	$ 1836.00	-
F1102,3,4-C-EG-50	9.00	5" DIA	-	$ 1137.00

WHEN NO MEMBRANE CLAMP IS REQUIRED, DELETE SUFFIX (-C) & DEDUCT **$103.00**

(*) DENOTES STRAINER FINISH (-1, -3, -50)

FLOOR DRAINS

F1100-C-ER EXTENDED RIM FLOOR DRAIN F1100-C-ER

STRAINER ADJUSTMENT		
SIZE	MIN	MAX
7" DIA	1 3/4"	2 5/8"
9" DIA	1 3/4"	2 5/8"

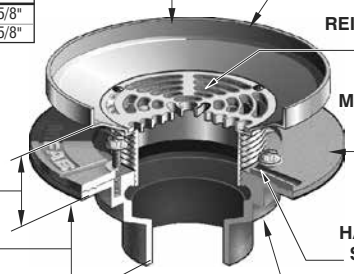

(See page 23 for photo of A1-6NH-7 body)

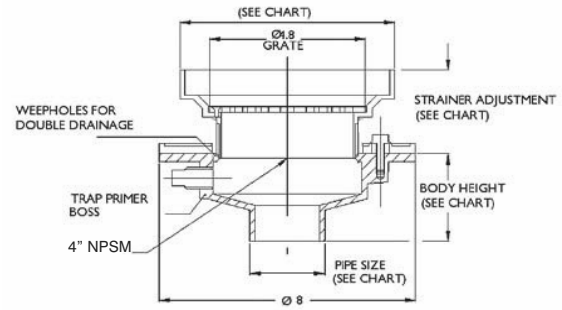

(*) Denotes standard diameter (7" or 9")
(**) Denotes finish (-1, -3 or -50)

PARTS	A1 BODY	ER(*)-(**)

EXTENDED RIM FLOOR DRAIN

MODEL NUMBER	WT. Lbs	STRAINER SIZE	LIST PRICE NICKEL BRONZE (-1)	LIST PRICE STAINLESS STEEL (-3)	LIST PRICE CAST IRON (-50)
F1102,3,4-C-ER7	9.00	7" DIA	$ 1426.00		-
F1102,3,4-C-ER7-50	9.00	7" DIA	-		$ 703.00
F1102,3,4-C-ER9	12.50	9" DIA	$ 2154		-
F1102,3,4-C-ER9-50	12.50	9" DIA	-		$ 867.00

WHEN NO MEMBRANE CLAMP IS REQUIRED, DELETE SUFFIX (-C) AND DEDUCT **$103.00**

F1100-C-ER, F1100-C-FC, F1100-C-FT, and F1100-C-HG OPTIONAL VARIATIONS: CONTINUE

SUFFIX	DESCRIPTION	LIST PRICE	SUFFIX	DESCRIPTION	LIST PRICE
-5	Sediment bucket (A1-PB)	$ 144.00	-21	Secondary flat strainer (FD-9600 Series)	$ 78.00
-6	Security screws (TR25 Torx and pin) (H-1039A)	$ 79.00	-28	Stainless Steel Body (Type 304) (2", 3", 4" No Hub only)	$ 1581.00
-7	Trap seal primer tapping	Standard	-30	PVC Socket Connection Body (2", 3" or 4")	No Add
-7MG	MI-GARD, Floor Drain Trap Seal	See TSP book	-31	ABS Socket Connection Body (2", 3" or 4")	No Add
-8	Backwater valve (BV1250 Series) (2", 3", 4")	$ 497.00	-34	Closure plug (C1440 Series)	$ 477.00
-10	Decorative polished top	$ 221.00	-40	Underdeck clamp (A1-C3)	$ 196.00
-11	Acid resistant epoxy coated body (and clamp if needed)	$ 343.00	-41	Sump receiver (A1-BP)	$ 337.00
-13	Galvanized body (and clamp if needed)	$ 259.00	-49	Chrome plated strainer assembly (add to -1 only)	$ 59.00
-15	Extension (DD-50)	$ 185.00			

PVC/ABS SOCKET BODIES AVAILABLE FOR 2", 3" OR 4" CONNECTION SIZES

SEE NEXT PAGE FOR MORE OPTIONS.

F1100-C-FC FLOOR DRAIN WITH SURFACE MEMBRANE CLAMP F1100-C-FC

STRAINER ADJUSTMENT		
STRAINER SIZE	MIN	MAX
7" DIA	1 1/8"	1 7/8"
9" DIA	1 1/8"	1 7/8"

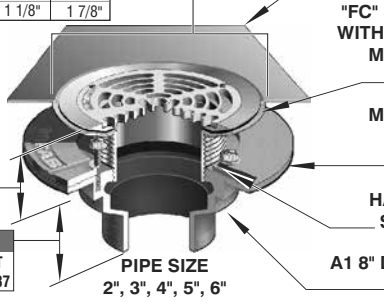

(See page 23 for photo of A1-6NH-7 body)

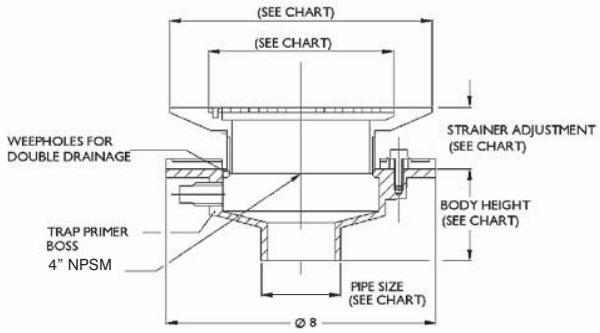

ANSI/ASME RATING

STRAINER	FREE AREA	LOAD RATING
FC7-1	12.0 IN^2	UP TO 2000 lbs
FC9-1	16.92 IN^2	UP TO 2000 lbs
FC7-3	12.0 IN^2	5000-7499 lbs
FC9-3	16.92 IN^2	5000-7499 lbs

(*) DENOTES STRAINER DIAMETER. (7" OR 9") DENOTES STRAINER FINISH (-1 OR -3)

PARTS	A1 BODY	FC(*)-(**)	A1-C1	HS-1

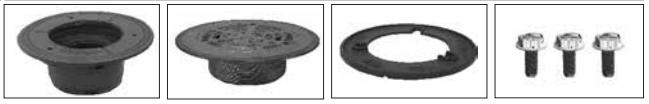

FLOOR DRAIN WITH SURFACE MEMBRANE CLAMP

MODEL NUMBER	WT. Lbs	STRAINER SIZE	GRATE SIZE	LIST PRICE NICKEL BRONZE (-1)	LIST PRICE STAINLESS STEEL (-3)
F1102,3,4-C-FC7	10.50	7 3/4" DIA	5 1/2" DIA	$ 2179.00	
F1102,3,4-C-FC9	12.50	9 3/4" DIA	9 3/4" DIA	$ 2784.00	

WHEN NO MEMBRANE CLAMP IS REQUIRED, DELETE SUFFIX (-C) AND DEDUCT **$103.00**

OPTIONAL LONGER SCREWS FOR THICK FLOOR MEMBRANES

PART NUMBER	DESCRIPTION	LIST PRICE
H-1014	3 of 10-24 x 1" Philips SS Flat Head Screws	$ 96.00

Design and dimensions are subject to modification. Prices do not include applicable taxes. Visit **www.mifab.com** for the most recent product information.

MIFAB®, Inc., 1321 West 119th Street, Chicago, Illinois 60643-5109, USA
Toll Free: 1-800-465-2736 • Fax: 1-773-341-3049
sales@mifab.com • Canada Toll Free: 1-800-387-3880

All sales subject to MIFAB's® Terms & Warranties. Please refer to inside front cover.

F1100-C-FT FLOOR DRAIN WITH RECESSED TILE FLANGE F1100-C-FT

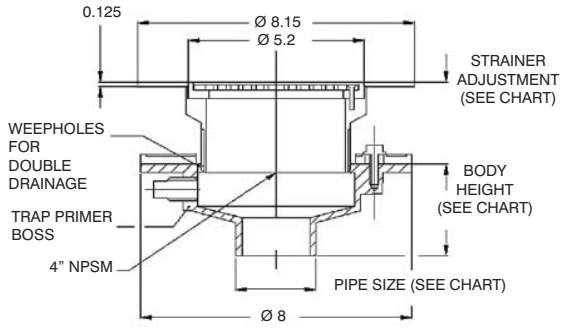

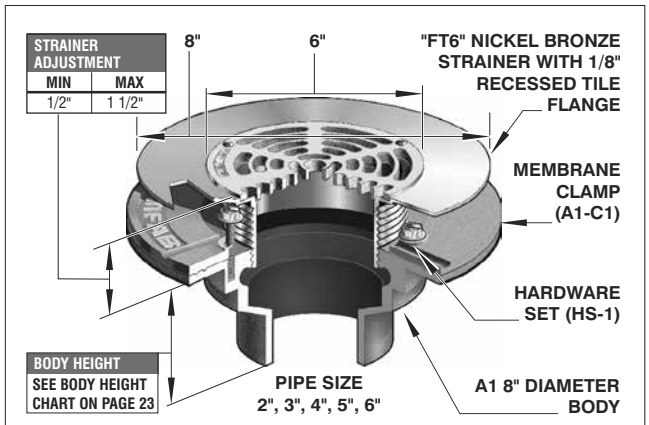

(See page 23 for photo of A1-6NH-7 body)

ANSI/ASME RATING

STRAINER	FREE AREA	LOAD RATING
FT6-1	9 IN²	UP TO 2000 lbs
FT6-3	9 IN²	5000-7499 lbs

FLOOR DRAIN WITH RECESSED TILE FLANGE

MODEL NUMBER	WT. Lbs	STRAINER SIZE	LIST PRICE: NICKEL BRONZE (-1) STAINLESS STEEL (-3)
F1102,3,4-C-FT6	9.50	6" DIA	$ 1465.00

PARTS

A1 BODY	FT6-(*)	A1-C1	HS-1

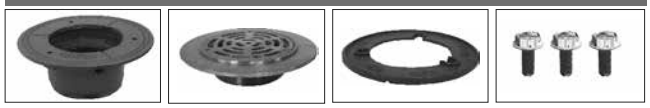

WHEN NO MEMBRANE CLAMP IS REQUIRED, DELETE SUFFIX (-C) AND DEDUCT **$103.00** (*) DENOTES STRAINER FINISH (-1 OR -3)

F1100-C-ER, F1100-C-FC, F1100-C-FT, and F1100-C-HG OPTIONAL VARIATIONS: CONT FROM Page 40

SUFFIX	DESCRIPTION	LIST PRICE	SUFFIX	DESCRIPTION	LIST PRICE
-69	Stainless steel sediment bucket (A1-SSB)	$ 279.00	-J-(1,3)	3" x 1" NB or SS oval funnel	$ 607.00
-90	Threaded side outlet (2", 3") (N/A -30, -31) No Add for -NH	$ 287.00	-J-50	3" x 1" cast iron oval funnel	$ 276.00
	4" threaded side outlet (N/A -30, -31) No Add for -NH	$ 535.00	P	Push on outlet (2", 3" or 4")	No Add
-95	Client logo (-3 only)	$ 1175.00	T	Threaded outlet (2", 3" or 4")	$ 107.00
-C2	High rough-in membrane clamp (A1-C2)	$ 103.00	-Z	Extended wide elastomeric flange on top (use Z5 or ZS top)	$ 1724.00
-F4-(1,3)	4" NB or SS round funnel	$ 583.00	X	Inside caulk outlet (2", 3" or 4")	No Add
-F4-50	4" cast iron round funnel	$ 247.00	5	5" no hub outlet	$ 707.00
-F6-(1,3)	6" NB or SS round funnel	$ 862.00	5T	5" threaded outlet	$ 707.00
-F6-50	6" cast iron round funnel	$ 395.00	5X	5" inside caulk outlet	$ 707.00
-G-(1,3)	4" x 9" NB or SS oval funnel	$ 1204.00	6	6" no hub outlet	$ 707.00
-G-50	4" x 9" C.I. oval funnel	$ 583.00	6P	6" push on outlet*	$ 707.00
-HP	Heel Proof grate, 1/4" wide slots	No Add			

* Specify POG-6 for C.I. pipe and POG-6-PVC for PVC pipe. 2", 3", 4" sizes use same gasket.
* Add -NH to -90 for no hub outlet - No Add.

F1100-C-HG FLOOR DRAIN WITH ROUND ADJUSTABLE HINGED STRAINER F1100-C-HG

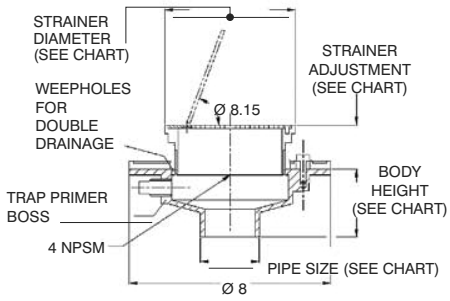

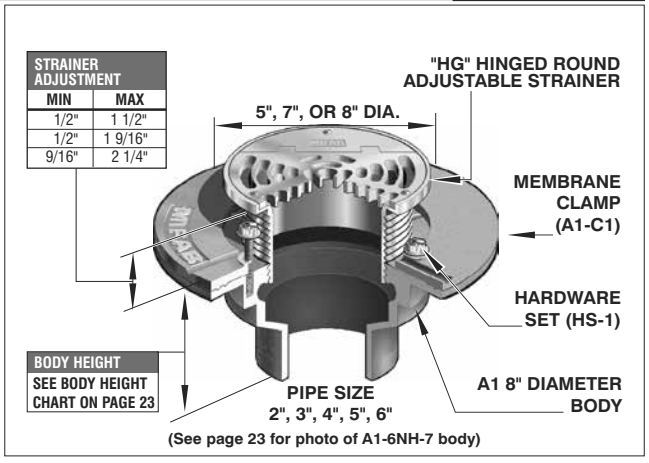

(See page 23 for photo of A1-6NH-7 body)

FLOOR DRAIN WITH ROUND ADJUSTABLE HINGED STRAINER

MODEL NUMBER	WT. Lbs	STRAINER SIZE	LIST PRICE STAINLESS STEEL (-3)
F1102,3,4-C-HG5	7.50	5" DIA	$ 1039.00
F1102,3,4-C-HG7	8.50	7" DIA	$ 1120.00
F1102,3,4-C-HG8	9.50	8" DIA	$ 1451.00

WHEN NO MEMBRANE CLAMP IS REQUIRED, DELETE SUFFIX (-C) AND DEDUCT **$103.00** (*) DENOTES STRAINER DIAMETER (5", 7", OR 8")

ANSI/ASME RATING

STRAINER	FREE AREA	LOAD RATING
HG5-3	8 IN²	5000-7499 lbs
HG7-3	9 IN²	5000-7499 lbs
HG8-3	18.0 IN²	5000-7499 lbs

PARTS

A1 BODY	HG(*)-3	A1-C1	HS-1

FLOOR DRAINS

F1100-C-K FLOOR DRAIN WITH DOME STRAINER F1100-C-K

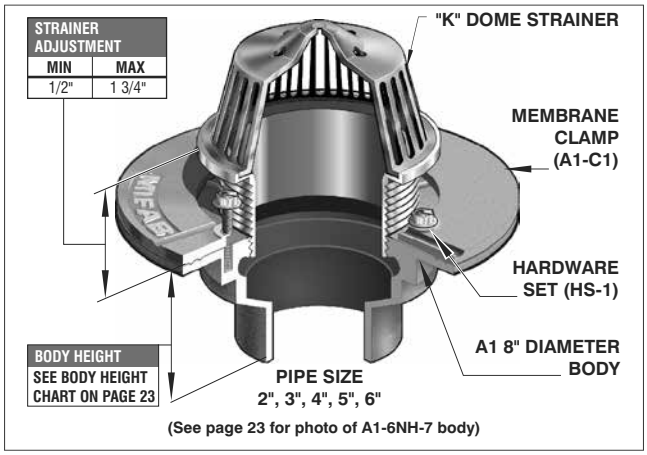

(See page 23 for photo of A1-6NH-7 body)

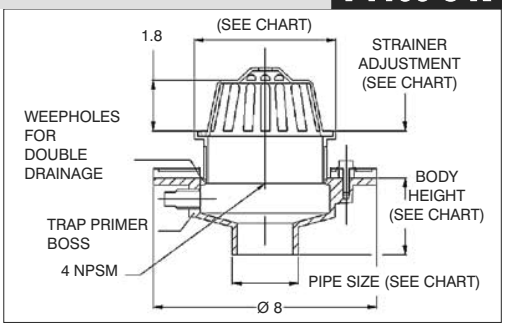

PARTS

A1 BODY	K-(*)	A1-C1	HS-1

(*) Denotes strainer finish (-1, -3, or -50)

FLOOR DRAIN WITH DOME STRAINER

MODEL NUMBER	WT. Lbs	DOME SIZE	LIST PRICE NICKEL BRONZE (-1)	STAINLESS STEEL (-3)	CAST IRON (-50)
F1102,3,4-C-K	8.00	5" DIA	$ 937.00	$ 937.00	$ 472.00
F1102,3,4-C-K(*)-83	W/SS MESH OVER DOME, ADD TO ABOVE:				$ 689.00

ANSI/ASME RATING

FREE AREA
15 IN²

WHEN NO MEMBRANE CLAMP IS REQUIRED, DELETE SUFFIX (-C) AND DEDUCT **$103.00**

F1100-C-K, F1100-C-N, F1100-C-RS, and F1100-C-S OPTIONAL VARIATIONS: CONTINUE

SUFFIX	DESCRIPTION	LIST PRICE	SUFFIX	DESCRIPTION	LIST PRICE
-5	Sediment bucket (A1-PB)	$ 144.00	-21	Secondary flat strainer (FD-9600 Series)	$ 78.00
-6	Security screws (TR25 Torx and pin) (H-1039A)	$ 79.00	-28	Stainless Steel Body (Type 304) (2", 3", 4" No Hub only)	$ 1581.00
-7	Trap seal primer tapping	Standard	-30	PVC Socket Connection Body (2", 3" or 4")	No Add
-7MG	MI-GARD, Floor Drain Trap Seal	See TSP book	-31	ABS Socket Connection Body (2", 3" or 4")	No Add
-8	Backwater valve (BV1250 Series) (2", 3", 4")	$ 497.00	-34	Closure plug (C1440 Series)	$ 477.00
-10	Decorative polished top	$ 221.00	-40	Underdeck clamp (A1-C3)	$ 196.00
-11	Acid resistant epoxy coated body (and clamp if needed)	$ 343.00	-41	Sump receiver (A1-BP)	$ 337.00
-13	Galvanized body (and clamp if needed)	$ 259.00	-49	Chrome plated strainer assembly (add to -1 only)	$ 59.00
-15	Extension (DD-50)	$ 185.00			

PVC/ABS SOCKET BODIES AVAILABLE FOR 2", 3" OR 4" CONNECTION SIZES

SEE NEXT PAGE FOR MORE OPTIONS.

F1100-C-N FLOOR DRAIN WITH 7" OR 9" TRACTOR GRATE F1100-C-N

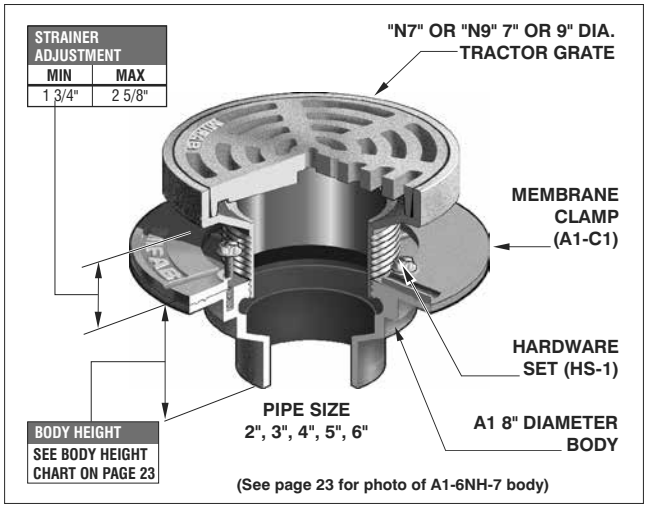

(See page 23 for photo of A1-6NH-7 body)

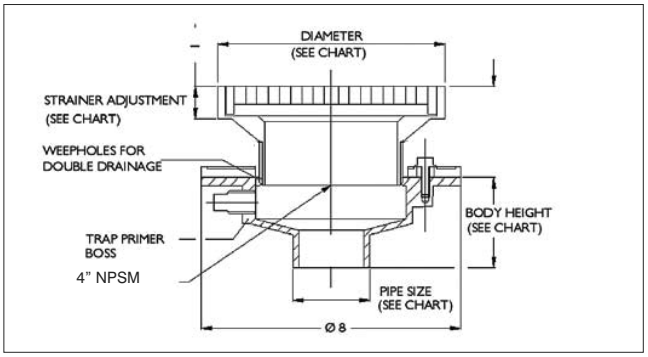

A1 BODY	N(*)-(**)	A1-C1	HS-1

(*) Denotes strainer diameter (7", or 9")
(**) Denotes strainer finish (-1,-3 or -4)

PARTS

FLOOR DRAIN WITH 7" OR 9" TRACTOR GRATE

MODEL NUMBER	WT. Lbs	STRAINER SIZE	LIST PRICE NICKEL BRONZE (-1)	STAINLESS STEEL (-3)	DUCTILE IRON (-4)
F1102,3,4-C-N7*	9.50	7" DIA	$ 1537.00	$ 1537.00	-
F1102,3,4-C-N7-4	9.50	7" DIA	-	-	$ 742.00
F1102,3,4-C-N9*	10.50	9" DIA	$ 2131.00	$ 2131.00	-
F1102,3,4-C-N9-4	10.50	9" DIA			$ 916.00

ANSI/ASME RATING

STRAINER	FREE AREA	LOAD RATING
N7	11.0 IN²	OVER 10000 lbs
N9	18.0 IN²	OVER 10000 lbs

*ADD 3/8" TO DIAMETER AND 3/16" TO HEIGHT FOR (-1), (-3), NB OR SS VENEER. WHEN NO MEMBRANE CLAMP IS REQUIRED, DELETE SUFFIX (-C) & DEDUCT **$103.00**

Design and dimensions are subject to modification. Prices do not include applicable taxes. Visit **www.mifab.com** for the most recent product information.
MIFAB®, Inc., 1321 West 119th Street, Chicago, Illinois 60643-5109, USA Toll Free: 1-800-465-2736 • Fax: 1-773-341-3049
All sales subject to MIFAB's® Terms & Warranties. Please refer to inside front cover. sales@mifab.com • Canada Toll Free: 1-800-387-3880

F1100-C-RS FLOOR DRAIN WITH RECTANGULAR STRAINER F1100-C-RS

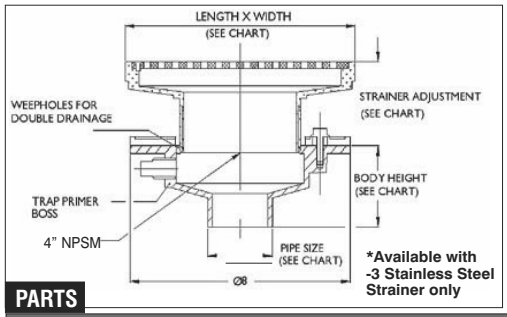

RS-48

4" x 8" GRATE PATTERN ILLUSTRATED

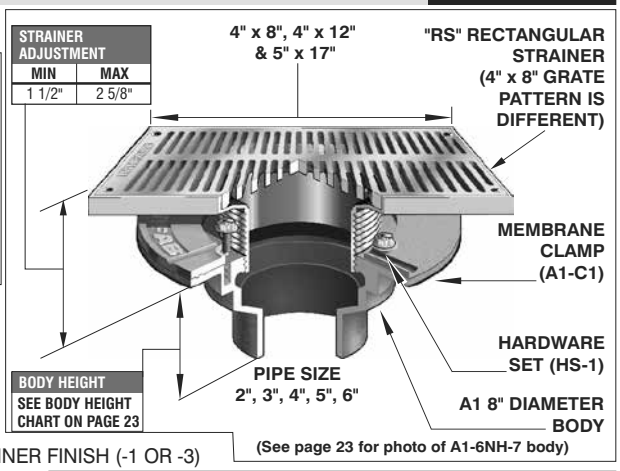

(See page 23 for photo of A1-6NH-7 body)

PARTS

A1 BODY	RS(*)-(**)	A1-C1	HS-1

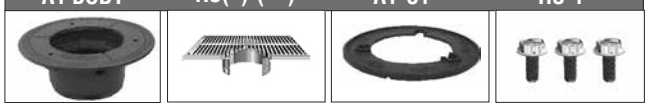

(*) DENOTES STRAINER SIZE (4"X 8", 4"X 12",OR 5"X 17") DENOTES STRAINER FINISH (-1 OR -3)

FLOOR DRAIN WITH RECTANGULAR STRAINER

MODEL NUMBER	WT. Lbs	STRAINER SIZE	LIST PRICE: NICKEL BRONZE (-1) STAINLESS STEEL (-3)
F1102,3,4-C-RS48	10.50	4" x 8"	$ 1451.00
F1102,3,4-C-RS412	11.00	4" x 12"	$ 1969.00
*F1102,3,4-C-RS517-3	14.00	5" x 17"	$ 2098.00

ANSI/ASME RATING

STRAINER	FREE AREA	LOAD RATING
RS48-1*	11.0 IN²	UP TO 2000 lbs
RS412-1*	15.0 IN²	UP TO 2000 lbs
RS517-3	20.0 IN²	5,000 TO 7,499 lbs
*STAINLESS (-3) FOR ABOVE		

WHEN NO MEMBRANE CLAMP IS REQUIRED, DELETE SUFFIX (-C) AND DEDUCT **$103.00**

F1100-C-K, F1100-C-N, F1100-C-RS, and F1100-C-S OPTIONAL VARIATIONS: CONT FROM Page 42

SUFFIX	DESCRIPTION	LIST PRICE	SUFFIX	DESCRIPTION	LIST PRICE
-69	Stainless steel sediment bucket (A1-SSB)	$ 279.00	-J-(1,3)	3" x 1" NB or SS oval funnel	$ 607.00
-90	Threaded side outlet (2", 3") (N/A -30, -31) No Add for -NH	$ 287.00	-J-50	3" x 1" cast iron oval funnel	$ 276.00
	4" threaded side outlet (N/A -30, -31) No Add for -NH	$ 535.00	P	Push on outlet (2", 3" or 4")	No Add
-95	Client logo (-3 only)	$ 1175.00	T	Threaded outlet (2", 3" or 4")	$ 107.00
-C2	High rough-in membrane clamp (A1-C2)	$ 103.00	-Z	Extended wide elastomeric flange on top (use Z5 or ZS top)	$ 1724.00
-F4-(1,3)	4" NB or SS round funnel	$ 583.00	X	Inside caulk outlet (2", 3" or 4")	No Add
-F4-50	4" cast iron round funnel	$ 247.00	5	5" no hub outlet	$ 707.00
-F6-(1,3)	6" NB or SS round funnel	$ 862.00	5T	5" threaded outlet	$ 707.00
-F6-50	6" cast iron round funnel	$ 395.00	5X	5" inside caulk outlet	$ 707.00
-G-(1,3)	4" x 9" NB or SS oval funnel	$ 1204.00	6	6" no hub outlet	$ 707.00
-G-50	4" x 9" C.I. oval funnel	$ 583.00	6P	6" push on outlet*	$ 707.00
-HP	Heel Proof grate, 1/4" wide slots	No Add			

* Specify POG-6 for C.I. pipe and POG-6-PVC for PVC pipe. 2", 3", 4" sizes use same gasket.
* Add -NH to -90 for no hub outlet - No Add.

F1100-C-S SQUARE FLOOR DRAIN F1100-C-S

(*) Denotes strainer size (5"x 5",6"x 6",8"x 8" 10"x 10")
(**r Denotes strainer finish (-1 ,-3 or -4)

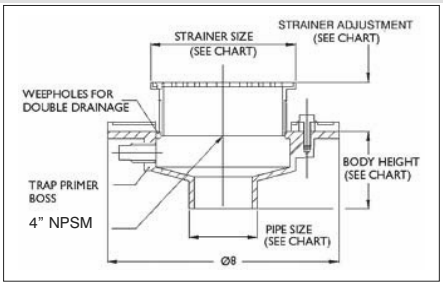

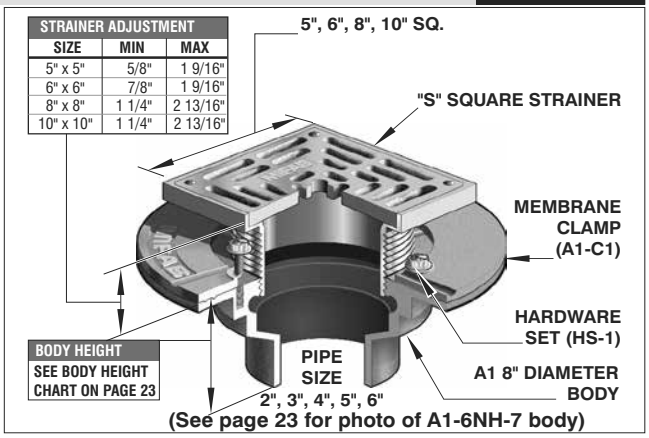

(See page 23 for photo of A1-6NH-7 body)

PARTS

A1 BODY	S(*)-(**)	A1-C1	HS-1

FLOOR DRAIN WITH SQUARE STRAINER

MODEL NUMBER	WT. Lbs	STRAINER SIZE	LIST PRICE: NICKEL BRONZE (-1) STAINLESS STEEL (-3)	LIST PRICE DUCTILE IRON (-4)
F1102,3,4-C-S5	8.00	5" x 5"	$ 841.00	-
F1102,3,4-C-S6	10.50	6" x 6"	$ 937.00	-
F1102,3,4-C-S8	12.00	8" x 8"	$ 1358.00	$ 990.00
F1102,3,4-C-S10	13.50	10" x 10"	$ 2172.00	-

ANSI/ASME RATING

STRAINER	FREE AREA	LOAD RATING
5" x 5" NB	9 IN²	UP TO 2000 lbs
6" x 6" NB	12 IN²	UP TO 2000 lbs
8" x 8" NB	26 IN²	UP TO 2000 lbs
8" x 8" DI	26 IN²	OVER 10,000 lbs
5" x 5" SS	9 IN²	5000 TO 7499 lbs
6" x 6" SS	12 IN²	5000 TO 7499 lbs
10" x 10" SS	28 IN²	5000 TO 7499 lbs

WHEN NO MEMBRANE CLAMP IS REQUIRED, DELETE SUFFIX (-C) AND DEDUCT **$103.00**

F1100-C-SD FLOOR DRAIN WITH SQUARE SOLID HINGED COVER F1100-C-SD

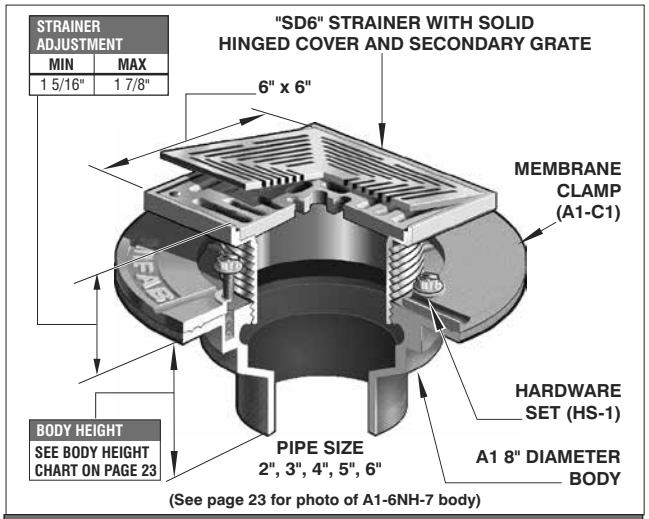

(See page 23 for photo of A1-6NH-7 body)

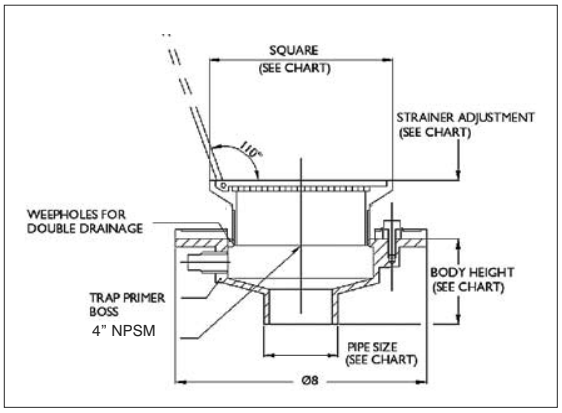

PARTS

A1 BODY	SD6-(*)	A1-C1	HS-1

(*) Denotes strainer finish (-1 or -3)

FLOOR DRAIN WITH SQUARE SOLID HINGED COVER

MODEL NUMBER	WT. Lbs	STRAINER SIZE	NICKEL BRONZE (-1) STAINLESS STEEL (-3)
F1102,3,4-C-SD6	11.50	6" x 6"	$ 1614.00

ANSI/ASME RATING

STRAINER	FREE AREA	LOAD RATING
SD6-1,3	12 IN²	5000 - 7499 lbs

WHEN NO MEMBRANE CLAMP IS REQUIRED, DELETE SUFFIX (-C) AND DEDUCT **$103.00**

F1100-C-SD, F1100-C-SHG, F1100-C-T, and F1100-C-VD OPTIONAL VARIATIONS: CONTINUE

SUFFIX	DESCRIPTION	LIST PRICE	SUFFIX	DESCRIPTION	LIST PRICE
-5	Sediment bucket (A1-PB)	$ 144.00	-21	Secondary flat strainer (FD-9600 Series)	$ 78.00
-6	Security screws (TR25 Torx and pin) (H-1039A)	$ 79.00	-28	Stainless Steel Body (Type 304) (2", 3", 4" No Hub only)	$ 1581.00
-7	Trap seal primer tapping	Standard	-30	PVC Socket Connection Body (2", 3" or 4")	No Add
-7MG	MI-GARD, Floor Drain Trap Seal	See TSP book	-31	ABS Socket Connection Body (2", 3" or 4")	No Add
-8	Backwater valve (BV1250 Series) (2", 3", 4")	$ 497.00	-34	Closure plug (C1440 Series)	$ 477.00
-10	Decorative polished top	$ 221.00	-40	Underdeck clamp (A1-C3)	$ 196.00
-11	Acid resistant epoxy coated body (and clamp if needed)	$ 343.00	-41	Sump receiver (A1-BP)	$ 337.00
-13	Galvanized body (and clamp if needed)	$ 259.00	-49	Chrome plated strainer assembly (add to -1 only)	$ 59.00
-15	Extension (DD-50)	$ 185.00			

PVC/ABS SOCKET BODIES AVAILABLE FOR 2", 3" OR 4" CONNECTION SIZES

SEE NEXT PAGE FOR MORE OPTIONS.

F1100-C-SHG FLOOR DRAIN WITH SQUARE ADJUSTABLE HINGED STRAINER F1100-C-SHG

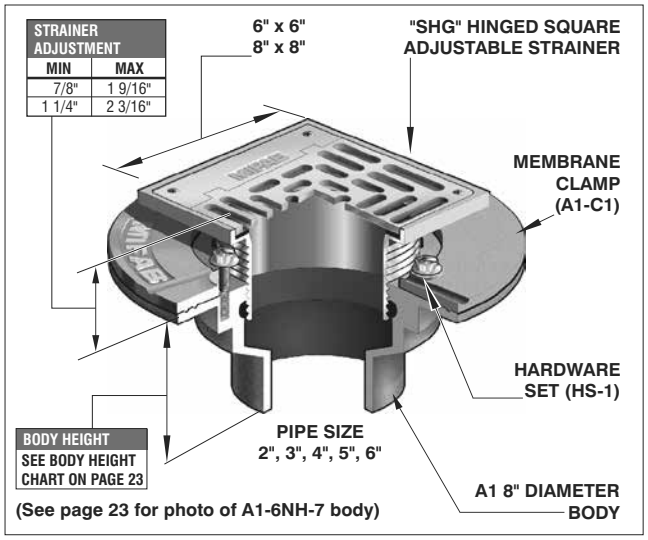

(See page 23 for photo of A1-6NH-7 body)

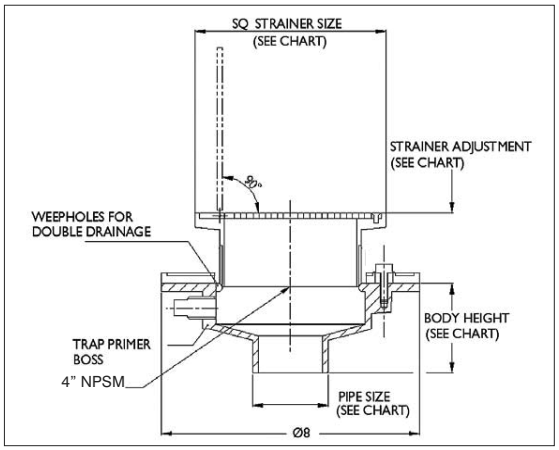

PARTS

A1 BODY	SHG(*)-3	A1-C1	HS-1

FLOOR DRAIN WITH SQUARE ADJUSTABLE HINGED STRAINER

MODEL NUMBER	WT. Lbs	STRAINER SIZE	LIST PRICE STAINLESS STEEL (-3)
F1102,3,4-C-SHG6-3	11.50	6" x 6"	$ 1366.00
F1102,3,4-C-SHG8-3	12.50	8" x 8"	$ 1806.00

ANSI/ASME RATING

STRAINER	FREE AREA	LOAD RATING
6" x 6"	9 IN²	5000 - 7499 lbs
8" x 8"	20 IN²	5000 - 7499 lbs

(*) Denotes strainer size (6"x 6" or 8"x 8")

WHEN NO MEMBRANE CLAMP IS REQUIRED, DELETE SUFFIX (-C) & DEDUCT **$103.00**

Design and dimensions are subject to modification. Prices do not include applicable taxes. Visit **www.mifab.com** for the most recent product information.
MIFAB®, Inc., 1321 West 119th Street, Chicago, Illinois 60643-5109, USA Toll Free: 1-800-465-2736 • Fax: 1-773-341-3049
All sales subject to MIFAB's® Terms & Warranties. Please refer to inside front cover. sales@mifab.com • Canada Toll Free: 1-800-387-3880

F1100-C-T FLOOR DRAIN WITH ROUND STRAINER AND SOLID SECURED COVER F1100-C-T

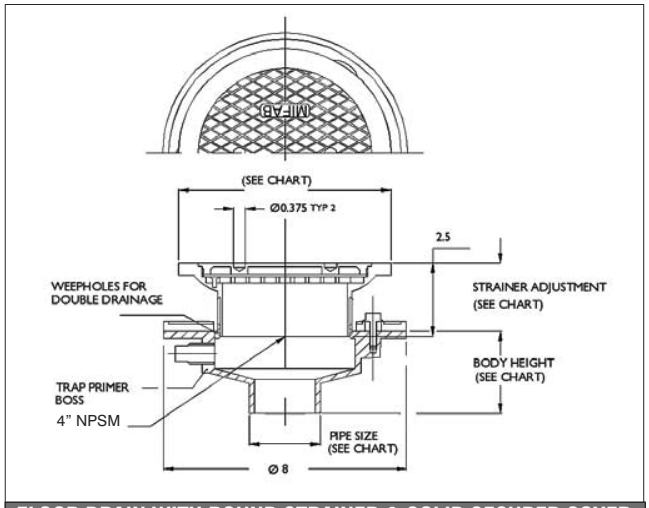

NOTE: "T" WRENCH TOOL REQUIRED TO REMOVE COVER

STRAINER ADJUSTMENT		
STRAINER	MIN	MAX
6"	1 1/16"	1 1/2"
7"	9/16"	1 9/16"

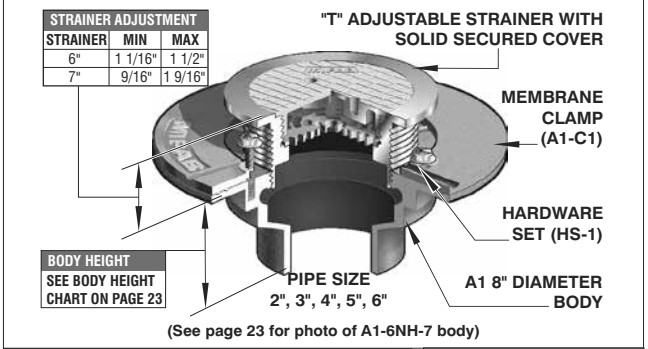

(See page 23 for photo of A1-6NH-7 body)

ANSI/ASME RATING		
STRAINER	FREE AREA	LOAD RATING
6" DIA	9 IN²	5000 - 7499 lbs
7" DIA	12 IN²	5000 - 7499 lbs

H-1042 "T" WRENCH TOOL

PARTS (*) Denotes strainer diameter (6" or 7")

A1 BODY	T(*)-3	A1-C1	HS-1

FLOOR DRAIN WITH ROUND STRAINER & SOLID SECURED COVER			
MODEL NUMBER	WT. Lbs	STRAINER SIZE	LIST PRICE STAINLESS STEEL (-3)
F1102,3,4-C-T6-3	11.50	6" DIA	$ 1486.00
F1102,3,4-C-T7-3	13.50	7" DIA	$ 2031.00
H-1042	"T" WRENCH TOOL		$ 198.00

WHEN NO MEMBRANE CLAMP IS REQUIRED, DELETE SUFFIX (-C) AND DEDUCT **$103.00**

F1100-C-SD, F1100-C-SHG, F1100-C-T, and F1100-C-VD OPTIONAL VARIATIONS: CONT FROM Page 44

SUFFIX	DESCRIPTION	LIST PRICE
-69	Stainless steel sediment bucket (A1-SSB)	$ 279.00
-90	Threaded side outlet (2", 3") (N/A -30, -31) No Add for -NH	$ 287.00
	4" threaded side outlet (N/A -30, -31) No Add for -NH	$ 535.00
-95	Client logo (-3 only)	$ 1175.00
-C2	High rough-in membrane clamp (A1-C2)	$ 103.00
-F4-(1,3)	4" NB or SS round funnel (avail. only with -SHG)	$ 583.00
-F4-50	4" cast iron round funnel (avail. only with -SHG)	$ 247.00
-F6-(1,3)	6" NB or SS round funnel (avail. only with -SHG)	$ 862.00
-F6-50	6" cast iron round funnel (avail. only with -SHG)	$ 395.00
-G-(1,3)	4" x 9" NB or SS oval funnel (avail. only with -SHG)	$ 1204.00
-G-50	4" x 9" C.I. oval funnel (avail. only with -SHG)	$ 583.00
-HP	Heel Proof grate, 1/4" wide slots	No Add

SUFFIX	DESCRIPTION	LIST PRICE
-J-(1,3)	3" x 1" NB or SS oval funnel (avail. only with -SHG)	$ 607.00
-J-50	3" x 1" cast iron oval funnel (avail. only with -SHG)	$ 276.00
P	Push on outlet (2", 3" or 4")	No Add
T	Threaded outlet (2", 3" or 4")	$ 107.00
-Z	Extended wide elastomeric flange on top (use Z5 or ZS top)	$ 1724.00
X	Inside caulk outlet (2", 3" or 4")	No Add
5	5" no hub outlet	$ 707.00
5T	5" threaded outlet	$ 707.00
5X	5" inside caulk outlet	$ 707.00
6	6" no hub outlet	$ 707.00
6P	6" push on outlet*	$ 707.00

* Specify POG-6 for C.I. pipe and POG-6-PVC for PVC pipe. 2", 3", 4" sizes use same gasket.
* Add -NH to -90 for no hub outlet - No Add.

F1100-C-VD FLOOR DRAIN WITH ROUND STRAINER AND SOLID HINGED COVER F1100-C-VD

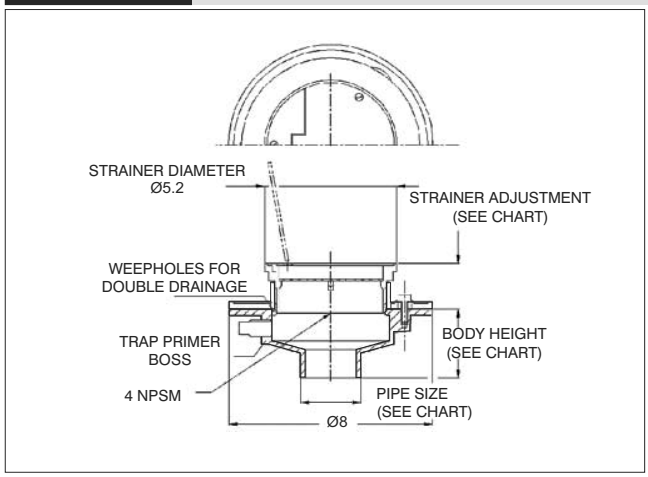

STRAINER ADJUSTMENT	
MIN	MAX
1/2"	1 1/2"

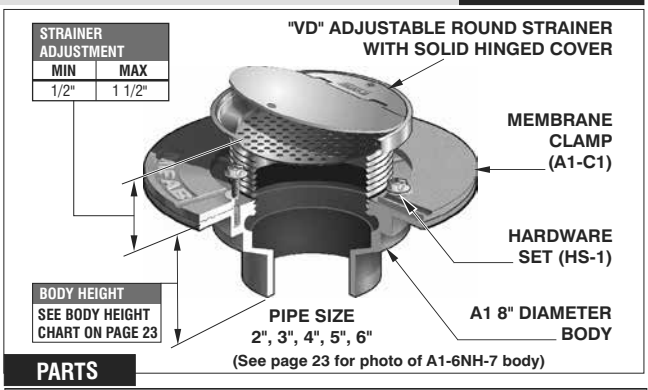

(See page 23 for photo of A1-6NH-7 body)

PARTS

A1 BODY	VD5-3	A1-C1	HS-1

FLOOR DRAIN WITH ROUND STRAINER AND SOLID HINGED COVER			
MODEL NUMBER	WT. Lbs	STRAINER SIZE	LIST PRICE STAINLESS STEEL (-3)
F1102,3,4-C-VD5	11.50	5" DIA	$ 1139.00

ANSI/ASME RATING		
STRAINER	FREE AREA	LOAD RATING
5" DIA	5 IN²	5000 - 7499 lbs

WHEN NO MEMBRANE CLAMP IS REQUIRED, DELETE SUFFIX (-C) AND DEDUCT **$103.00**

FLOOR DRAINS

F1100-C-WD OVERFLOW DRAIN WITH STANDPIPE AND OPTIONAL DOME F1100-C-WD

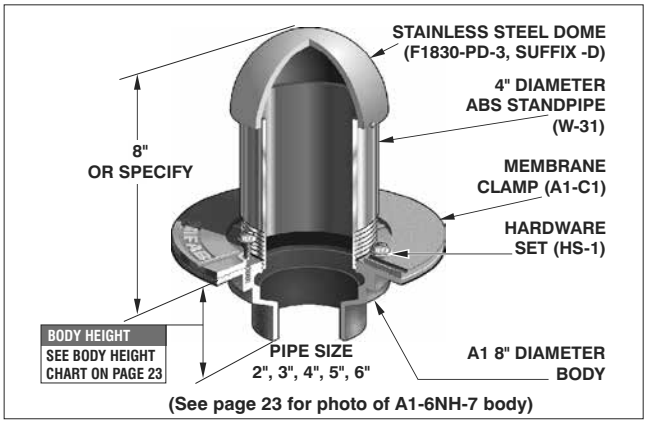

(See page 23 for photo of A1-6NH-7 body)

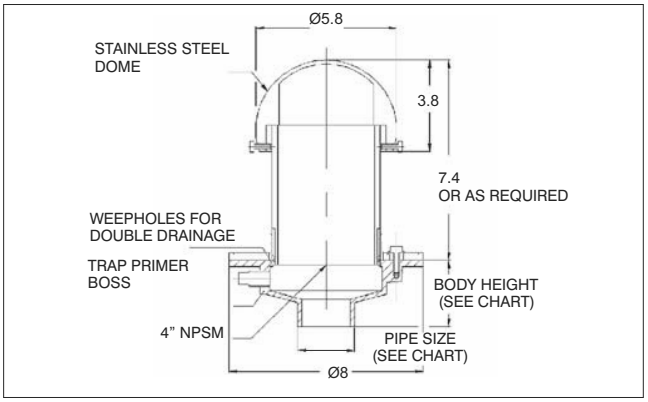

PARTS

A1 BODY	WD-3	A1-C1	HS-1

OVERFLOW DRAIN WITH STANDPIPE AND DOME			
MODEL NUMBER	WT. Lbs	STANDPIPE DIA X HT.	LIST PRICE STAINLESS STEEL (-3)
F1102,3,4-C-W(D)-3	9.50	4" x 6"	$ 2559.00

DEDUCT FOR: LESS DOME - (DELETE SUFFIX (-D) AND DEDUCT **$500.00**
WHEN NO MEMBRANE CLAMP IS REQUIRED, DELETE SUFFIX (-C) AND DEDUCT **$103.00**

F1100-C-W(D), F1100-C-X, F1100-C-XS, and F1100-C-Z OPTIONAL VARIATIONS: CONTINUE

SUFFIX	DESCRIPTION	LIST PRICE	SUFFIX	DESCRIPTION	LIST PRICE
-5	Sediment bucket (A1-PB)	$ 144.00	-21	Secondary flat strainer (FD-9600 Series)	$ 78.00
-6	Security screws (TR25 Torx and pin) (H-1039A)	$ 79.00	-28	Stainless Steel Body (Type 304) (2", 3", 4" No Hub only)	$ 1581.00
-7	Trap seal primer tapping	Standard	-30	PVC Socket Connection Body (2", 3" or 4")	No Add
-7MG	MI-GARD, Floor Drain Trap Seal	See TSP book	-31	ABS Socket Connection Body (2", 3" or 4")	No Add
-8	Backwater valve (BV1250 Series) (2", 3", 4")	$ 497.00	-34	Closure plug (C1440 Series)	$ 477.00
-10	Decorative polished top	$ 221.00	-40	Underdeck clamp (A1-C3)	$ 196.00
-11	Acid resistant epoxy coated body (and clamp if needed)	$ 343.00	-41	Sump receiver (A1-BP)	$ 337.00
-13	Galvanized body (and clamp if needed)	$ 259.00	-49	Chrome plated strainer assembly (add to -1 only)	$ 59.00
-15	Extension (DD-50)	$ 185.00			

PVC/ABS SOCKET BODIES AVAILABLE FOR 2", 3" OR 4" CONNECTION SIZES

SEE NEXT PAGE FOR MORE OPTIONS.

F1100-C-X FLOOR DRAIN WITH ROUND HEAVY DUTY STRAINER F1100-C-X

STRAINER ADJUSTMENT		
SIZE	MIN	MAX
5" DIA	1/2"	1 1/2"
6" DIA	11/16"	1 1/2"
8" DIA	11/16"	2 1/4"

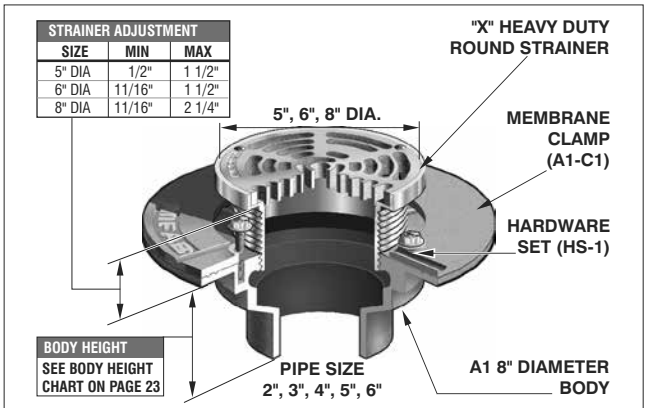

(See page 23 for photo of A1-6NH-7 body)

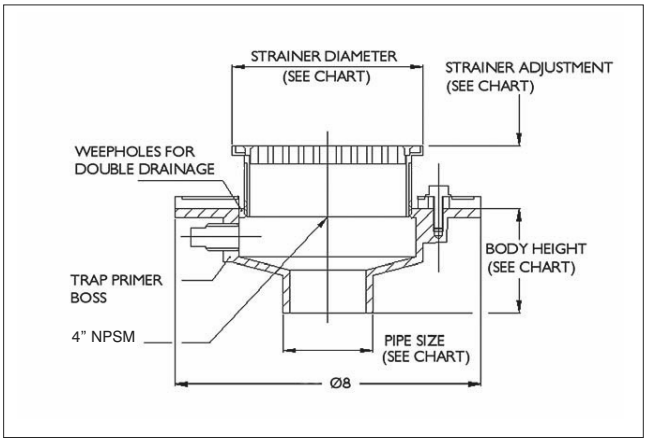

ANSI/ASME RATING		LOAD RATING		
STRAINER	FREE AREA	NICKEL BRONZE	STAINLESS STEEL	DUCTILE IRON
5" DIA	8 IN^2	5000-7499 lbs	5000-7499 lbs	OVER 10,000 lbs
6" DIA	9 IN^2	5000-7499 lbs	5000-7499 lbs	-
8" DIA	18 IN^2	5000-7499 lbs	5000-7499 lbs	OVER 10,000 lbs

PARTS

A1 BODY	X(*)-(**)

A1-C1	HS-1

(*) Denotes strainer diameter (5", 6", or 8")
(**) Denotes strainer finish (-1, -3, or -4)

FLOOR DRAIN WITH ROUND HEAVY DUTY STRAINER				
MODEL NUMBER	WT. Lbs	STRAINER SIZE	LIST PRICE: NICKEL BRONZE (-1) STAINLESS STEEL (-3)	LIST PRICE DUCTILE IRON (-4)
F1102,3,4-C-X5	7.50	5" DIA	$ 903.00	$ 555.00
F1102,3,4-C-X6	8.00	6" DIA	$ 1042.00	-
F1102,3,4-C-X8	10.00	8" DIA	$ 1537.00	$ 916.00

WHEN NO MEMBRANE CLAMP IS REQUIRED, DELETE SUFFIX (-C) AND DEDUCT **$103.00**

F1100-C-XS FLOOR DRAIN WITH HEAVY DUTY SQUARE STRAINER F1100-C-XS

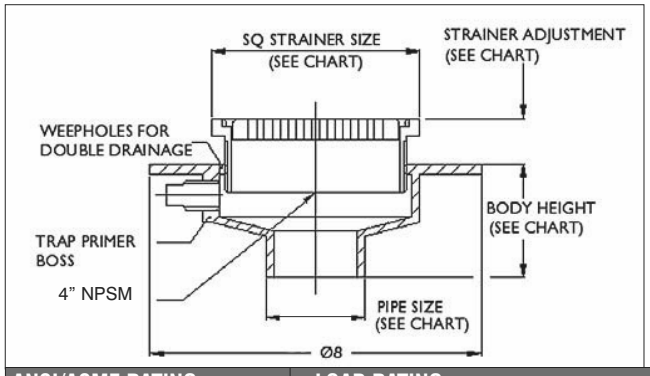

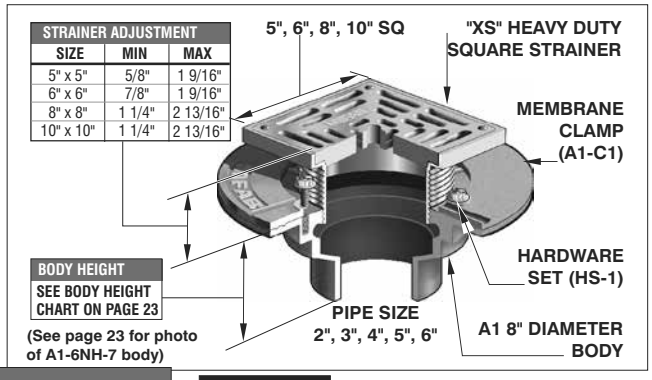

ANSI/ASME RATING		LOAD RATING		
STRAINER	FREE AREA	NICKEL BRONZE	STAINLESS STEEL	DUCTILE IRON
5" x 5"	9 IN^2	5000-7499 lbs	5000-7499 lbs	OVER 10,000 lbs
6" x 6"	12 IN^2	5000-7499 lbs	5000-7499 lbs	-
8" x 8"	26 IN^2	5000-7499 lbs	5000-7499 lbs	OVER 10,000 lbs
10" x 10"	28 IN^2		5000-7499 lbs	

FLOOR DRAIN WITH HEAVY DUTY SQUARE STRAINER

MODEL NUMBER	WT. Lbs	STRAINER SIZE	LIST PRICE: NICKEL BRONZE (-1) STAINLESS STEEL (-3)	LIST PRICE DUCTILE IRON (-4)
F1102,3,4-C-XS5	8.50	5" x 5"	$ 1115.00	-
F1102,3,4-C-XS6	11.00	6" x 6"	$ 1208.00	-
F1102,3,4-C-XS8	12.50	8" x 8"	$ 1632.00	$ 990.00
F1102,3,4-C-XS10	13.50	10" x 10"	$ 2875.00	-

WHEN NO MEMBRANE CLAMP IS REQUIRED, DELETE SUFFIX (-C) AND DEDUCT **$103.00**

ARTS

A1 BODY	XS(*)-(**)

A1-C1	HS-1

(*) DENOTES STRAINER SIZE (5"X 5", 6"X 6", 8"X 8" OR 10"X 10")
(**) DENOTES STRAINER FINISH (-1, -3, OR -4)

F1100-C-W(D), F1100-C-X, F1100-C-XS AND F1100-C-Z SERIES OPTIONAL VARIATIONS CONTINUED FROM PAGE 46

SUFFIX	DESCRIPTION	LIST PRICE	SUFFIX	DESCRIPTION	LIST PRICE
-49	Chrome plated strainer assembly (add to -1 only)	$ 59.00	-HP	Heel Proof grate, 1/4" wide slots	No Add
-69	Stainless steel sediment bucket (A1-SSB)	$ 279.00	-J-(1,3)	3" x 1" NB or SS oval funnel	$ 607.00
-90	Threaded side outlet (2", 3") (N/A -30, -31) No Add for -NH	$ 287.00	-J-50	3" x 1" cast iron oval funnel	$ 276.00
	4" threaded side outlet (N/A -30, -31) No Add for -NH	$ 535.00	P	Push on outlet (2", 3" or 4")	No Add
-95	Client logo (-3 only)	$ 1175.00	T	Threaded outlet (2", 3" or 4")	$ 107.00
-C2	High rough-in membrane clamp (A1-C2)	$ 103.00	-Z	Extended wide elastomeric flange on top (use Z5 or ZS top)	$ 1724.00
-F4-(1,3)	4" NB or SS round funnel	$ 583.00	X	Inside caulk outlet (2", 3" or 4")	No Add
-F4-50	4" cast iron round funnel	$ 247.00	5	5" no hub outlet	$ 707.00
-F6-(1,3)	6" NB or SS round funnel	$ 862.00	5T	5" threaded outlet	$ 707.00
-F6-50	6" cast iron round funnel	$ 395.00	5X	5" inside caulk outlet	$ 707.00
-G-(1,3)	4" x 9" NB or SS oval funnel	$ 1204.00	6	6" no hub outlet	$ 707.00
-G-50	4" x 9" C.I. oval funnel	$ 583.00	6P	6" push on outlet*	$ 707.00

* Specify POG-6 for C.I. pipe and POG-6-PVC for PVC pipe. 2", 3", 4" sizes use same gasket. * Add -NH to -90 for no hub outlet - No Add.

F1100-C-Z FLOOR DRAIN WITH ELASTOMERIC FLANGE F1100-C-Z

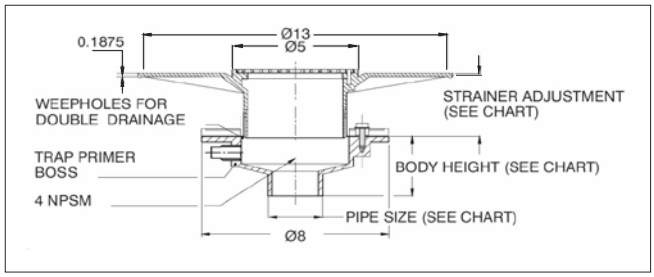

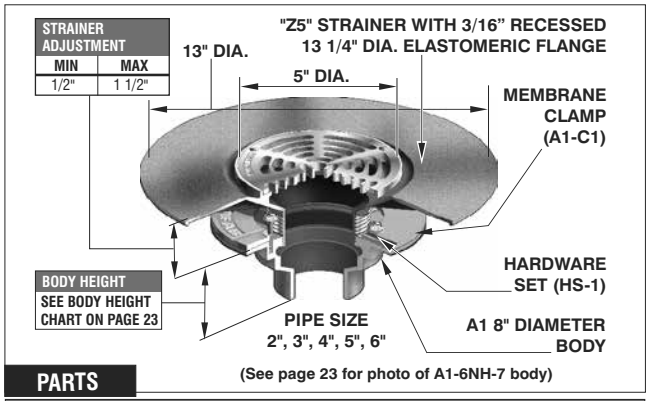

(*) DENOTES STRAINER FINISH (-1 OR -3)

ANSI/ASME RATING		
STRAINER	FREE AREA	LOAD RATING
Z5-1	8 IN^2	UP TO 2000 lbs
Z5-3	8 IN^2	5000 - 7499 lbs

FLOOR DRAIN WITH ROUND STRAINER AND SOLID HINGED COVER

MODEL NUMBER	WT. Lbs	STRAINER SIZE	LIST PRICE: NICKEL BRONZE (-1) STAINLESS STEEL (-3)
F1102,3,4-C-Z5	8.50	5" DIA	$ 1915.00

WHEN NO MEMBRANE CLAMP IS REQUIRED, DELETE SUFFIX (-C) & DEDUCT **$103.00**

PARTS

A1 BODY	Z5-(*)	A1-C1	HS-1

F1100-C-ZS FLOOR DRAIN WITH SQUARE STRAINER AND ELASTOMERIC FLANGE F1100-C-ZS

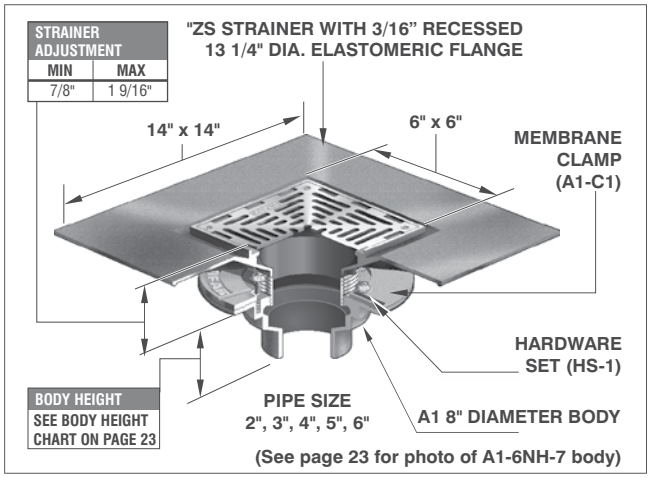

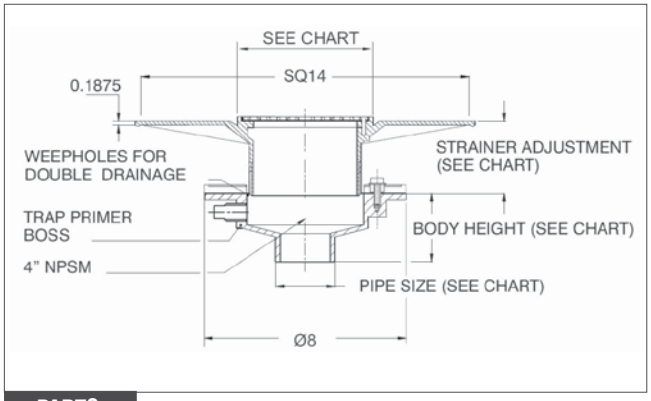

PARTS

A1 BODY	ZS-(*)	A1-C1	HS-1

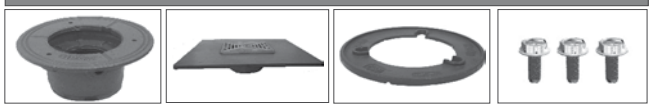

(*) DENOTES STRAINER FINISH (-1 OR -3)

ANSI/ASME RATING

STRAINER	FREE AREA	LOAD RATING
ZS-1	12 IN²	UP TO 2000 lbs
ZS-3	12 IN²	5000 - 7499 lbs

FLOOR DRAIN WITH SQUARE STRAINER AND ELASTOMERIC FLANGE

MODEL NUMBER	WT. Lbs	STRAINER SIZE	LIST PRICE: NICKEL BRONZE (-1) STAINLESS STEEL (-3)
F1102,3,4-C-ZS	11.50	6" x 6"	$ 1828.00

WHEN NO MEMBRANE CLAMP IS REQUIRED, DELETE SUFFIX (-C) AND DEDUCT **$103.00**

OPTIONAL VARIATIONS CONTINUE ON PAGE 49 CONTINUE

F1100-C-90 FLOOR DRAIN WITH SIDE OUTLET F1100-C-90

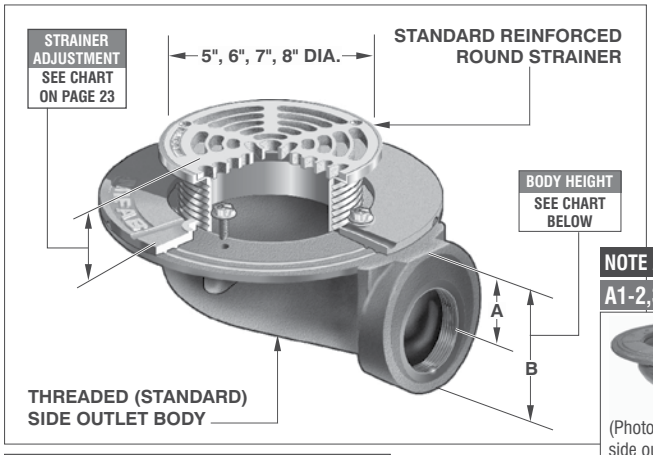

NOTE ALTERNATIVE
A1-2,3,4-90-NH-7

(Photo of A1 No Hub side outlet body)

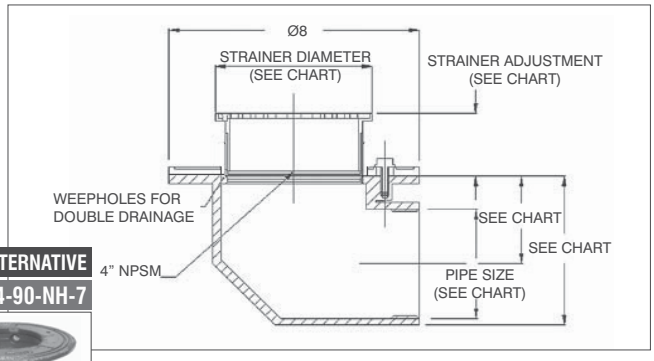

PARTS

A1 (*)T-90-7	(*)-(**)

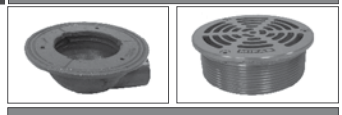

A1-C1	HS-1

ANSI/ASME RATING

FREE AREA / LOAD RATING
SEE STD (*) STRAINER CHART ON PAGE 37

ADD **SUFFIX -NH** FOR NO HUB OUTLET AND SPECIFY INTEGRAL A1 NO HUB BODY, A1-2,3,4-90-NH-7. NO ADD.

FOR ALL OTHER STRAINER TYPES, TAKE STRAINER PRICE FROM PAGES 50-51 AND ADD **$439.00** FOR 2" AND 3" THREADED SIDE OUTLET BODY AND **$687.00** FOR 4" THREADED SIDE OUTLET BODY

FLOOR DRAIN WITH SIDE OUTLET

MODEL NUMBER	WT. Lbs	OUTLET SIZE	STRAINER SIZE	LIST PRICE: NICKEL BRONZE (-1) STAINLESS STEEL (-3)	LIST PRICE DUCTILE IRON (-4)
F1102,3-C-90-5	6.50	2", 3"	5" DIA	$ 919.00	$ 842.00
F1104-C-90-5	7.00	4"	5" DIA	$ 1167.00	$ 1090.00
F1102,3-C-90-6	7.50	2", 3"	6" DIA	$ 1058.00	-
F1104-C-90-6	8.00	4"	6" DIA	$ 1306.00	-
F1102,3-C-90-7	8.00	2", 3"	7" DIA	$ 1174.00	-
F1104-C-90-7	8.50	4"	7" DIA	$ 1422.00	-
F1102,3-C-90-8	8.00	2", 3"	8" DIA	$ 1397.00	$ 1203.00
F1104-C-90-8	8.50	4"	8" DIA	$ 1645.00	$ 1451.00

WHEN NO MEMBRANE CLAMP IS REQUIRED, DELETE SUFFIX (-C) AND DEDUCT **$103.00**

(*) Denotes strainer diameter (5", 6,"7, or 8 ")
(**) Denotes strainer finish (-1, -3, or -4)
(+) Denotes threaded outlet (2", 3", or 4")

BODY HEIGHT

PIPE SIZE	A	B
2"	2 15/16"	3 7/8"
3"	3"	4 3/8"
4"	3 1/4"	4 3/8"

ABOVE DIMENSIONS ARE FOR STANDARD THREADED OR OPTIONAL NO HUB OUTLET

Design and dimensions are subject to modification. Prices do not include applicable taxes. Visit **www.mifab.com** for the most recent product information.

MIFAB®, Inc., 1321 West 119th Street, Chicago, Illinois 60643-5109, USA
Toll Free: 1-800-465-2736 • Fax: 1-773-341-3049
sales@mifab.com • Canada Toll Free: 1-800-387-3880

All sales subject to MIFAB's® Terms & Warranties. Please refer to inside front cover.

OPTIONAL VARIATIONS

SUFFIX	DESCRIPTION	LIST PRICE
-3	Type 304 Stainless Steel Strainer	No Add
-5	Sediment bucket (A1-PB)	$ 144.00
-6	Security screws (TR25 Torx and pin) (H-1039A)	$ 79.00
-7	Trap seal primer tapping	Standard
-7MG	MI-GARD, Floor Drain Trap Seal	See TSP book
-8	Backwater valve (BV1250 Series) (2", 3", 4")	$ 497.00
-10	Decorative polished top	$ 221.00
-11	Acid resistant epoxy coated body (and clamp if needed)	$ 343.00
-13	Galvanized body (and clamp if needed)	$ 259.00
-15	Extension (DD-50)	$ 185.00
-21	Secondary flat strainer (FD-9600 Series)	$ 78.00
-28	Stainless Steel Body (Type 304) (2", 3", 4" No Hub only)	$ 1581.00
-30	PVC Socket Connection Body (2", 3" or 4")	No Add
-31	ABS Socket Connection Body (2", 3" or 4")	No Add
-34	Closure plug (C1440 Series)	$ 477.00
-40	Underdeck clamp (A1-C3)	$ 196.00
-41	Sump receiver (A1-BP)	$ 337.00
-49	Chrome plated strainer assembly (add to -1 only)	$ 59.00
-69	Stainless steel sediment bucket (A1-SSB)	$ 279.00
-90	Threaded side outlet (2", 3") (N/A -30, -31) No Add for -NH	$ 287.00
	4" threaded side outlet (N/A -30, -31) No Add for -NH	$ 535.00
-95	Client logo (-3 only)	$ 1175.00
-C2	High rough-in membrane clamp (A1-C2)	$ 103.00
-F4-(1,3)	4" NB or SS round funnel	$ 583.00
-F4-50	4" cast iron round funnel	$ 247.00
-F6-(1,3)	6" NB or SS round funnel	$ 862.00
-F6-50	6" cast iron round funnel	$ 395.00
-G-(1,3)	4" x 9" NB or SS oval funnel	$ 1204.00
-G-50	4" x 9" C.I. oval funnel	$ 583.00
-HP	Heel Proof grate, 1/4" wide slots	No Add
-J-(1,3)	3" x 1" NB or SS oval funnel	$ 607.00
-J-50	3" x 1" cast iron oval funnel	$ 276.00
P	Push on outlet (2", 3" or 4")	No Add
T	Threaded outlet (2", 3" or 4")	$ 107.00
-Z	Extended wide elastomeric flange on top (use Z5 or ZS top)	$ 1724.00
X	Inside caulk outlet (2", 3" or 4")	No Add
5	5" no hub outlet	$ 707.00
5T	5" threaded outlet	$ 707.00
5X	5" inside caulk outlet	$ 707.00
6	6" no hub outlet	$ 707.00
6P	6" push on outlet*	$ 707.00

F1000-C THROUGH F1100-C-90

VISUAL REFERENCE TO POPULAR OPTIONAL VARIATIONS

"-C2" HIGH ROUGH-IN MEMBRANE CLAMP

A1-C2

"-C" MEMBRANE CLAMP

A1-C1

Because MIFAB'S® unique design allows the strainer assembly to install directly into the throat of the body, one can eliminate the membrane clamping collar and save **$103.00**

-5 Sediment Bucket

-6 Security Screws

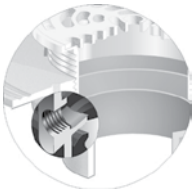

-7 Trap Seal Primer Tapping

-8 Backwater Valve

-15 Extension

-34 Closure Plug

* ADD -NH TO -90 FOR NO HUB OUTLET - NO ADD.

*(SPECIFY POG-6 FOR C.I. PIPE AND POG-6-PVC FOR PVC PIPE. 2",3",4" SIZES USE SAME GASKET)

F1000-C THROUGH F1100-C-90 — MODULAR BODIES

A1 BODY (F1100)

Description	List Price
2", 3", 4" body only	$ 152.00
5", 6", body only	$ 859.00
2", 3", 4" body and A1-C1 membrane clamp	$ 255.00

A1 BODY (F1100 W/SUFFIXES) -30(PVC) or -31(ABS)

Description	List Price
2", 3", 4" PVC (-30) body	$152.00
2", 3", 4" ABS (-31) body	$152.00
2", 3", 4" body and A1-C1 membrane clamp	$255.00

A1-90 BODY (F1100-90)

Description	List Price
2", 3" Threaded Side outlet body only	$ 439.00
4" Threaded side outlet body only	$ 687.00

A1-90-NH BODY

Description	List Price
2", 3"no hub side outlet body only	$ 439.00
4" no hub side outlet body only	$ 687.00

F1120 INTEGRAL TRAP BODY

Description	List Price
F1122T-PB-7*, F1123T-PB-7*	$ 696.00
F1124T-PB-7*	$1144.00
*For A1-C1 membrane clamp add Suffix -C	$ 103.00

F1130C INTEGRAL TRAP & CLEANOUT BODY AND MEMBRANE CLAMP

Description	List Price
2", 3", 4"	$ 1477.00

F1160 INTEGRAL TRAP BODY AND MEMBRANE CLAMP

Description	List Price
3" Outlet	$ 906.00
4" Outlet	$ 1057.00

F1170 INTEGRAL TRAP BODY W/AUX. INLETS

Description	List Price
F1173-CA	$ 1100.00
F1174-CA	$ 1244.00

A4 PVC/ABS BODY

Description	List Price
2", 3", 4" PVC body only (A4-2,3,4-30-7)	$ 152.00
2", 3", 4" ABS body only (A4-2,3,4-31-7)	$ 152.00

A4 CAST IRON BODY

Description	List Price
2", 3", 4" Cast iron body only	$ 152.00

F1100-C STRAINERS — F1000-C THROUGH F1100-C-90 MODULAR STRAINERS — F1100-C STRAINERS

MIFAB ADJUSTABLE STRAINERS

ADJUSTABLE STRAINERS MAY BE USED WITH PLASTIC "FITTING" BODIES; ATTACHED WITH "NH" CLAMP TO CAST IRON OR PLASTIC PIPE OR THREADED INTO MIFAB BODY ASSEMBLIES.

FOR STRAINER DIMENSIONS AND ADJUSTMENT RANGE, SEE F1100 SERIES ON PAGES 36 - 48

NOTE: -1 = NICKEL BRONZE, -2 = POLISHED BRASS, -3 = STAINLESS STEEL, -4 = DUCTILE IRON -49 = POLISHED CHROME, -50 = CAST IRON

STANDARD REINFORCED ROUND STRAINER

Part No.	Description	Wt. lbs	List Price NB (-1)	List Price SS (-3)
5-(1,2,3)	5" Dia.	1.25	$ 377.00	$ 377.00
5-49	5" Dia.	1.25	$ 436.00	-
6-(1,3)	6" Dia.	1.75	$ 516.00	$ 516.00
7-(1,3)	7" Dia.	2.50	$ 632.00	$ 632.00
8-(1,3)	8" Dia.	4.00	$ 855.00	$ 855.00
10-(1,3)	10" Dia.	8.50	$ 1324.00	$ 1324.00

"AS" ANGLE STRAINER

Part No.	Description	Wt. lbs	List Price NB (-1)
AS	5" x 4" x 4"	4.25	$ 2433.00

"DD" INDIRECT WASTE HUB

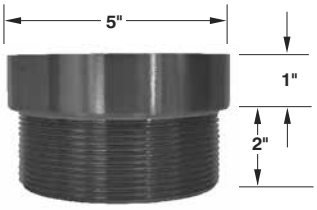

Part No.	Description	Wt. lbs	List Price NB (-1)	List Price SS (-3)
DD	4" Hub	2.50	$ 343.00	$ 343.00
DD-50	4" C/Iron Hub	2.25	$ 185.00	

"EF" 4" ROUND FUNNEL STRAINER

Part No.	Description	Wt. lbs	List Price
EF-(1,3)*	4" Dia. Funnel	3.25	$ 960.00
EF-50	4" Dia. Funnel	3.50	$ 546.00
EF6-(1,3)*	6" Dia. Funnel	4.25	$ 1239.00
EF6-50	6" Dia. Funnel	4.50	$ 695.00

*Available in Stainless Steel or Nickel Bronze

"EG" 4" & 9" ELONGATED FUNNEL STRAINER

Part No.	Description	Wt. lbs	List Price
EG-(1,3)*	9" Oval	4.25	$ 1581.00
EG-50	9" Oval	5.25	$ 882.00

*Available in Stainless Steel or Nickel Bronze

"F" FUNNELS ONLY+

Part No.	Description	Wt. lbs	List Price
F4-(1,3)*	(4" Round funnel only)	1.50	$ 583.00
F4-50	(4" Round funnel only)	1.75	$ 247.00
F6-(1,3)*	(6" Round funnel only)	2.00	$ 862.00
F6-50	(6" Round funnel only)	2.50	$ 395.00

*Available in Stainless Steel or Nickel Bronze
+Includes H-1083 (1/4 x 20 x 3/4 hex head screw and H-1081 washer)

"G" & "J" FUNNELS ONLY+

Part No.	Description	Wt. lbs	List Price
G-(1,3)*	(4"x 9" Oval funnel only)	2.50	$ 1204.00
G-50	(4"x 9" Oval funnel only)	3.50	$ 583.00
J-(1,3)*	(3"x 1" Oval funnel only)	2.00	$ 607.00
J-50	(3"x 1" Oval funnel only)	3.00	$ 276.00

*Available in Stainless Steel or Nickel Bronze
+Includes H-1083 (1/4 x 20 x 3/4 hex head screw and H-1081 washer)

"ER" EXTENDED RIM STRAINER

Part No.	Description	Wt. lbs	List Price NB (-1) SS (-3)	List Price CI (-50)
ER7	7" Diameter	4.50	$ 1171.00	$ 448.00
ER9	9" Diameter	5.75	$ 1899.00	$ 612.00

"FC" STRAINER WITH SURFACE MEMBRANE CLAMP

Part No.	Description	Wt. lbs	List Price NB (-1)	List Price SS (-3)
FC7	7" Diameter	5.25	$ 1924.00	$ 1924.00
FC9	9" Diameter	6.25	$ 2529.00	$ 2529.00

"FT" STRAINER WITH RECESSED TILE FLANGE

Part No.	Description	Wt. lbs	List Price NB (-1)	List Price SS (-3)
FT6	6" Diameter	3.25	$ 1210.00	$ 1210.00

"HG" ROUND HINGED STRAINER

Part No.	Description	Wt. lbs	List Price
HG5-3	5" Diameter	2.50	$ 784.00
HG7-3	7" Diameter	5.00	$ 865.00
HG8-3	8" Diameter	5.50	$ 1196.00

"K" DOME STRAINER

Part No.	Description	Wt. lbs	List Price
K-1	5" Diameter NB Dome	2.00	$ 682.00
K-3	5" Diameter SS Dome	2.00	$ 682.00
K-50	5" Diameter CI Dome	3.00	$ 217.00

"N" TRACTOR GRATE

Part No.	Description	Wt. lbs	List Price
N7-1,3	7" Dia. NB or SS	5.75	$ 1282.00
N7-4	7" Dia. Ductile Iron	6.25	$ 487.00
N9-1,3	9" Dia. NB or SS	7.25	$ 1876.00
N9-4	9" Dia. Ductile Iron	8.00	$ 661.00

"RS" RECTANGULAR STRAINER

4" x 8" grate pattern illustrated

Part No.	Description	Wt. lbs	List Price NB (-1)	List Price SS (-3)
RS48	4" x 8"	4.50	$ 1196.00	$ 1196.00
RS412	4" x 12"	5.50	$ 1714.00	$ 1714.00
RS517	5" x 17"	11.00		$ 1843.00

Design and dimensions are subject to modification. Prices do not include applicable taxes. Visit **www.mifab.com** for the most recent product information.

MIFAB®, Inc., 1321 West 119th Street, Chicago, Illinois 60643-5109, USA
Toll Free: 1-800-465-2736 • Fax: 1-773-341-3049
sales@mifab.com • Canada Toll Free: 1-800-387-3880

All sales subject to MIFAB's® Terms & Warranties. Please refer to inside front cover.

F1100-C STRAINERS — F1000-C THROUGH F1100-C-90 MODULAR STRAINERS — STRAINERS F1100-C

"S" REINFORCED SQUARE STRAINER

Part No.	Description	Wt. lbs	List Price NB (-1)	List Price SS (-3)
S5*	5" x 5"	2.00	$ 586.00	$ 586.00
S6	6" x 6"	3.00	$ 682.00	$ 682.00
S8	8" x 8"	7.00	$ 1103.00	$ 1103.00
S10	10" x 10"	12.00	$ 1917.00	$ 1917.00
*Also available in S5-2 and S5-49			$ 741.00	

"SD" SECONDARY GRATE WITH SOLID HINGED COVER

Part No.	Description	Wt. lbs	List Price NB (-1) SS (-3)
SD6-(1,3)	6" x 6"	4.50	$ 1359.00
*Available in Stainless Steel or Nickel Bronze			

"SHG" SQUARE HINGED STRAINER

Part No.	Description	Wt. lbs	List Price SS (-3)
SHG6-3	6" x 6" SS	6.00	$ 1111.00
SHG8-3	8" x 8" SS	7.25	$ 1551.00

"T" ROUND STRAINER AND SOLID SECURED COVER

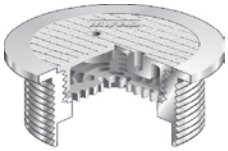

Part No.	Description	Wt. lbs	List Price SS (-3)
T6-3	6" Diameter	4.00	$ 1231.00
T7-3	7" Diameter	5.00	$ 1776.00

"VD" ROUND STRAINER AND SOLID HINGED COVER

Part No.	Description	Wt. lbs	List Price SS (-3)
VD5-3	5" Diameter	3.00	$ 884.00

W(D) STANDPIPE (DOME)

Part No.	Description	Wt. lbs	List Price
A1-W-3	(Less Dome)	4.00	$ 1804.00
WD-3	(With Dome)	5.50	$ 2304.00

"X" HEAVY DUTY ROUND STRAINER

Part No.	Description	Wt. lbs	List Price NB (-1) SS (-3)	List Price DI (-4)
X5	5" Diameter	2.00	$ 648.00	$ 300.00
X6	6" Diameter	3.00	$ 787.00	-
X8	8" Diameter	5.00	$ 1282.00	$ 661.00

"XS" HEAVY DUTY SQUARE STRAINER

Part No.	Description	Wt. lbs	List Price NB (-1) SS (-3)	List Price DI (-4)
XS5	5" x 5"	2.25	$ 860.00	
XS6	6" x 6"	3.50	$ 953.00	
XS8	8" x 8"	7.00	$ 1377.00	$ 735.00
XS10	10" x 10"	10.00	$ 2620.00	

"Z" ROUND STRAINER WITH ELASTOMERIC FLANGE

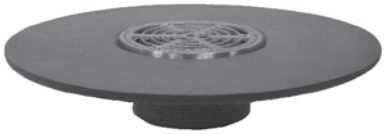

Part No.	Description	Wt. lbs	List Price NB (-1)	List Price SS (-3)
Z5	5" Diameter	10.25	$ 1660.00	$ 1660.00

"ZS" SQUARE STRAINER WITH ELASTOMERIC FLANGE

Part No.	Description	Wt. lbs	List Price NB (-1)	List Price SS (-3)
ZS	6" x 6"	17.50	$ 1573.00	$ 1573.00

TOP SET STRAINER

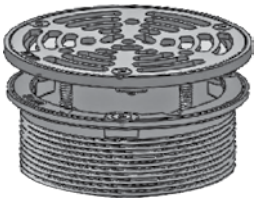

Part No.	Description	Wt. lbs	List Price NB (-1)
TS5-1	5" Dia.	1.25	$ 377.00
TS6-1	6" Dia.	1.75	$ 516.00

TOP SET GRATE AND FRAME

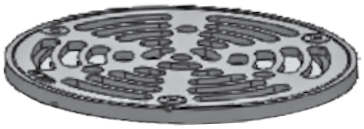

Retro-fit frame and grate only - fits all JaSaWaZ 5" round strainers.

Part No.	Description	Wt. lbs	List Price NB (-1)
RTS5-1	5" Dia.	0.75	$ 313.00

"SPR" SPACER RING FOR 5" OR 6" ROUND STRAINERS

Number Of Rings	Hardware (3 pieces required)	List Price
1 Ring	H-1014	$ 37.00
2 Rings	H-1015	$ 47.00
3 Rings	H-1016	$ 48.00
4 Rings	H-1018	$ 56.00
4+ Rings	Contact MIFAB	
NOTE: The same hardware is used for the 5" and 6" diameter spacer rings		

The SPR spacer ring can be used to adjust the height of the strainer to match any discrepancies in finished floor grade. Any number of rings can be added together. Each ring adds 3/8" of height.

Note: SCREW THREAD SPECIFICATION IS #10-24-UNC

Part No.	Description	Wt. lbs	List Price NB (-1)	List Price SS (-3)
SPR-5	5" Dia. x 3/8"	0.75	$ 313.00	$ 313.00
SPR-6	6" Dia. x 3/8"	1.00	$ 313.00	$ 313.00
NOTE: Must order hardware separately				

F1120T-C TERRACE DRAIN WITH INTEGRAL DEEP SEAL TRAP F1120T-C

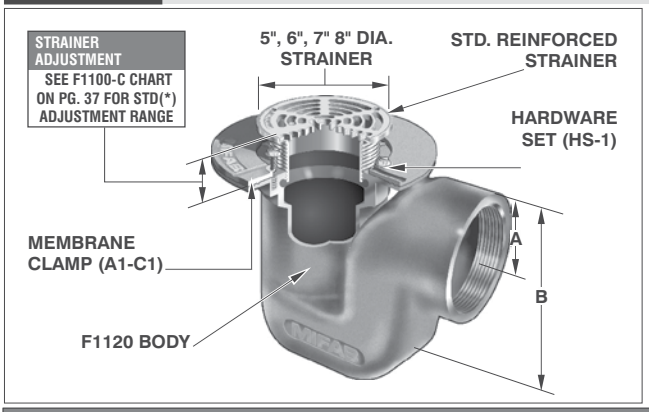

PARTS

F1120 BODY (*)-(**) A1-C1

2" body illustrated

HS-1

(*) Denotes strainer diameter (5", 6", 7" or 8")
(**) Denotes strainer finish (-1, -3 or -4)

TERRACE DRAIN WITH INTEGRAL DEEP SEAL TRAP

MODEL NUMBER	WT. Lbs	OUTLET SIZE	STRAINER SIZE	LIST PRICE: NICKEL BRONZE (-1) STAINLESS STEEL (-3)	LIST PRICE DUCTILE IRON (-4)
F1122,3T-C-5	15.00	2", 3"	5" DIA	$ 1176.00	$ 1098.00
F1124T-C-5	16.00	4"	5" DIA	$ 1624.00	$ 1546.00
F1122,3T-C-6	17.00	2", 3"	6" DIA	$ 1315.00	-
F1124T-C-6	18.00	4"	6" DIA	$ 1763.00	-
F1122,3T-C-7	17.50	2", 3"	7" DIA	$ 1431.00	-
F1124T-C-7	18.50	4"	7" DIA	$ 1879.00	-
F1122,3T-C-8	19.00	2", 3"	8" DIA	$ 1654.00	$ 1460.00
F1124T-C-8	20.00	4"	8" DIA	$ 2102.00	$ 1908.00

*ADD SUFFIX -NH FOR NO HUB ADAPTOR, FOR 2" ADD **$143.00**, FOR 3" ADD **$204.00**, FOR 4" ADD **$317.00**
WHEN NO MEMBRANE CLAMP IS REQUIRED, DELETE SUFFIX (-C) AND DEDUCT **$103.00**

ANSI/ASME RATING

SEE F1100-C CHART ON PG. 37 FOR RATINGS

BODY HEIGHT

PIPE SIZE	A	B
2"*	2 1/4"	5 3/16"
3"*	2 1/2"	5 3/16"
4"*	2 3/4"	7 3/8"

*ABOVE DIMENSIONS FOR STANDARD THREADED OR OPTIONAL NO HUB OUTLET

F1120T-C, F1130C AND F1140C OPTIONAL VARIATIONS

SUFFIX	DESCRIPTION	LIST PRICE	SUFFIX	DESCRIPTION	LIST PRICE
-5	Sediment bucket (A1-PB)	$ 144.00	-F4-(1,3)	4" NB or SS round funnel	$ 583.00
-6	Security screws (TR25 Torx and pin) (H-1039A)	$ 79.00	-F4-50	4" cast iron round funnel	$ 247.00
-7	Trap seal primer tapping (2", 3", 4")	$ 196.00	-F6-(1,3)	6" NB or SS round funnel	$ 862.00
-7MG	MI-GARD, Floor Drain Trap Seal	See TSP book	-F6-50	6" cast iron round funnel	$ 395.00
-8	Backwater valve (BV1254) (Cannot use with -5)	$ 497.00	-G-(1,3)	4" x 9" NB or SS oval funnel	$ 1204.00
-11	Acid resistant epoxy coated body (and clamp if needed)	$ 540.00	-G-50	4" x 9" C.I. oval funnel	$ 583.00
-13	Galvanized body (and clamp if needed)	$ 540.00	-J-(1,3)	3" x 1" NB or SS oval funnel	$ 607.00
-15	Extension (DD-50)	$ 185.00	-J-50	3" x 1" cast iron oval funnel	$ 276.00
-15	Extension (F1130C, F1140C) (2 pcs DD-50)	$ 370.00	*-NH	No hub outlet (F1120 only)	See MI-850
-AI	Auxiliary inlet (specify 1 1/2"or 2")	$ 452.00			

FOR OPTIONAL STRAINERS, SEE PAGES 50-51

F1130C FLOOR DRAIN WITH INTEGRAL DEEP SEAL TRAP AND CLEANOUT F1130C

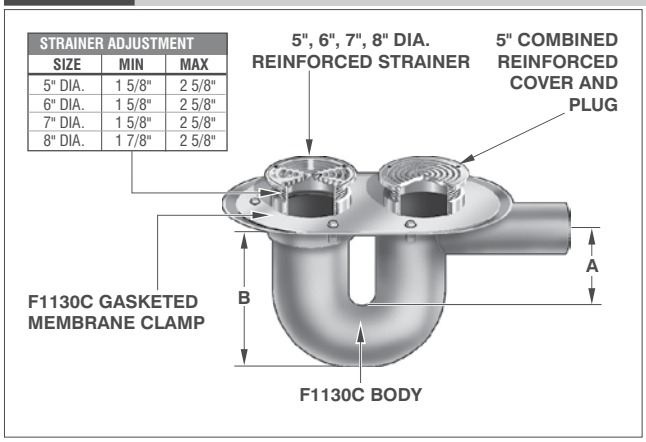

PARTS

F1130C BODY and CLAMP (*)-(**) (R)-(*)

(*) Denotes top assembly finish (-1, -3 or -4)
(*) Denotes strainer diameter (5", 6", 7" or 8")
(**) Denotes strainer finish (-1, -3 or -4)

ANSI/ASME RATING

SEE F1100-C CHART ON PG. 37 FOR RATINGS

COVER ADJUSTMENT

MIN	MAX
1 5/8"	2 5/8"

FLOOR DRAIN WITH INTEGRAL DEEP SEAL TRAP AND CLEANOUT

MODEL NUMBER	WT. Lbs	OUTLET SIZE	STRAINER SIZE	LIST PRICE: NICKEL BRONZE (-1) STAINLESS STEEL (-3)	LIST PRICE DUCTILE IRON (-4)
F1132,3,4C-5	41.00	2", 3", 4"	5" DIA	$ 1948.00	$ 1870.00
F1132,3,4C-6	43.00	2", 3" 4"	6" DIA	$ 2095.00	-
F1132,3,4C-7	45.00	2", 3" 4"	7" DIA	$ 2216.00	-
F1132,3,4C-8	47.00	2", 3" 4"	8" DIA	$ 2452.00	$ 2258.00

BODY HEIGHT

PIPE SIZE	A	B
2" NO HUB	5 3/8"	13 1/2"
3" NO HUB	6"	13 1/2"
4" NO HUB	6 1/4"	13 1/2"

Design and dimensions are subject to modification. Prices do not include applicable taxes. Visit **www.mifab.com** for the most recent product information.
MIFAB®, Inc., 1321 West 119th Street, Chicago, Illinois 60643-5109, USA Toll Free: 1-800-465-2736 • Fax: 1-773-341-3049
All sales subject to MIFAB's® Terms & Warranties. Please refer to inside front cover. sales@mifab.com • Canada Toll Free: 1-800-387-3880

F1140C FLOOR DRAIN WITH 7" OR 9" ROUND TRACTOR GRATE, INTEGRAL DEEP SEAL TRAP & CLEANOUT F1140C

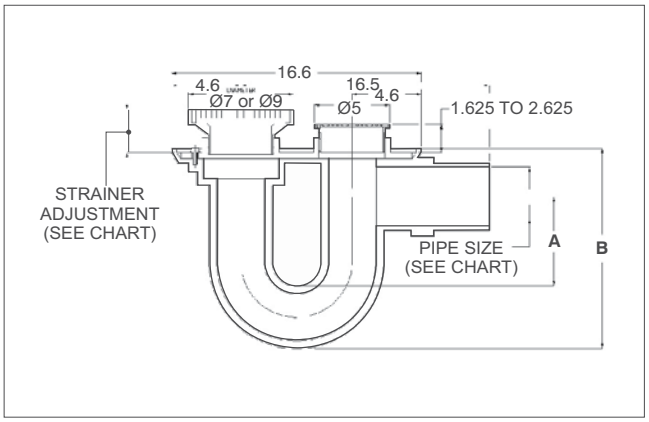

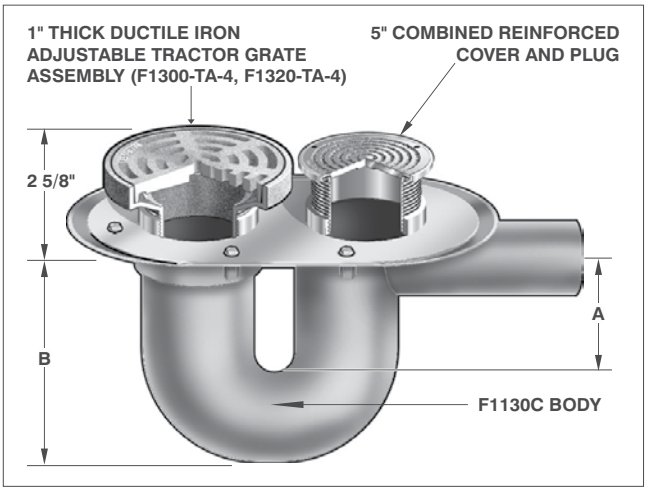

(*) Denotes strainer diameter (F1300 or F1320)
(**) Denotes strainer finish (-1, -3, or -4)

SEE PAGE 52 FOR OPTIONAL VARIATIONS

ANSI/ASME RATING		
STRAINER	FREE AREA	LOAD RATING
F1300-TA-4	11.0 IN²	OVER 10,000 lbs
F1320-TA-4	18.0 IN²	OVER 10,000 lbs

PARTS

(*) Denotes top assembly finish (-1, -3 or -4)

F1130C BODY

F13(*)0-TA-(**)

R-(*)

FLOOR DRAIN WITH 7" OR 9" ROUND TRACTOR GRATE, INTEGRAL DEEP SEAL TRAP & CLEANOUT					
MODEL NUMBER	WT. Lbs	NO HUB OUTLET SIZE	STRAINER SIZE	LIST PRICE: NICKEL BRONZE (-1) STAINLESS STEEL (-3)	LIST PRICE DUCTILE IRON (-4)
F1142,3,4C-7	45.00	2", 3", 4"	7" DIA	$ 3188.00	$ 2528.00
F1142,3,4C-9*	50.00	2", 3", 4"	9" DIA	$ 3758.00	$ 2712.00

*ADD 3/8" TO 9" STRAINER DIAMETER AND 3/16" TO STRAINER HEIGHT FOR NB OR SS VENEER

BODY HEIGHT		
PIPE SIZE	A	B
2" NO HUB	5 3/8"	13 1/2"
3" NO HUB	6"	13 1/2"
4" NO HUB	6 1/4"	13 1/2"

FOR OPTIONAL STRAINERS, SEE PAGES 50-51

FOR F1160 OPTIONAL VARIATIONS, SEE PAGE 54

F1160-C PRISON CELL FLOOR DRAIN F1160-C

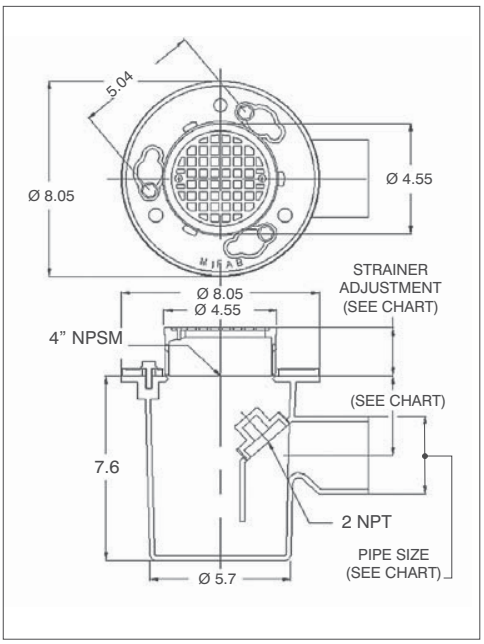

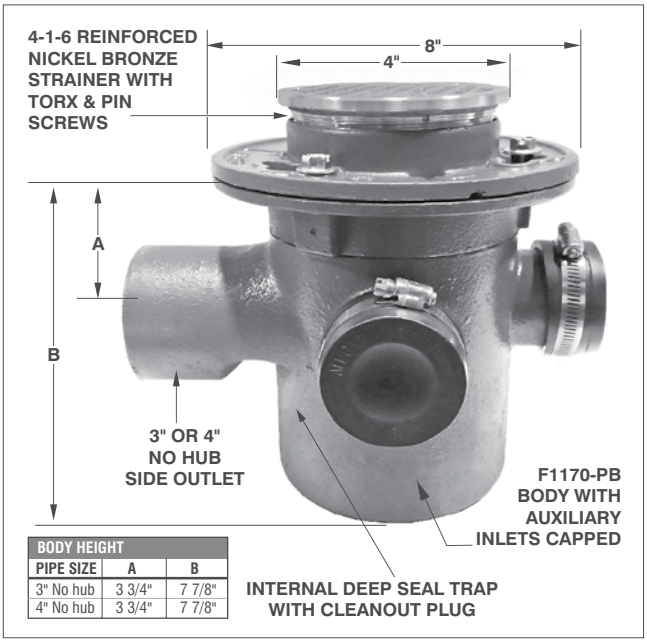

BODY HEIGHT		
PIPE SIZE	A	B
3" No hub	3 3/4"	7 7/8"
4" No hub	3 3/4"	7 7/8"

F1160 BODY

4-1-6

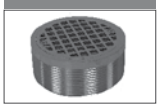

A1-C1

HS-1

PARTS

PRISON CELL FLOOR DRAIN					
MODEL NUMBER	WT. Lbs	NO HUB OUTLET SIZE	STRAINER SIZE	LIST PRICE NICKEL BRONZE (-1)	LIST PRICE CHROME PLATED (-49)
F1163-C-4-1-6	13.00	3"	4" DIA	$ 1386.00	$ 1445.00
F1164-C-4-1-6	13.00	4"	4" DIA	$ 1537.00	$ 1596.00

WHEN NO MEMBRANE CLAMP IS REQUIRED, DELETE SUFFIX (-C) AND DEDUCT **$103.00**

ANSI/ASME RATING		
STRAINER	FREE AREA	LOAD RATING
4-1-6	3.5 IN²	UP TO 2000 lbs

FLOOR DRAINS

F1170-C FLOOR DRAIN WITH MULTI INLETS, ROUND STRAINER AND INTEGRAL TRAP F1170-C

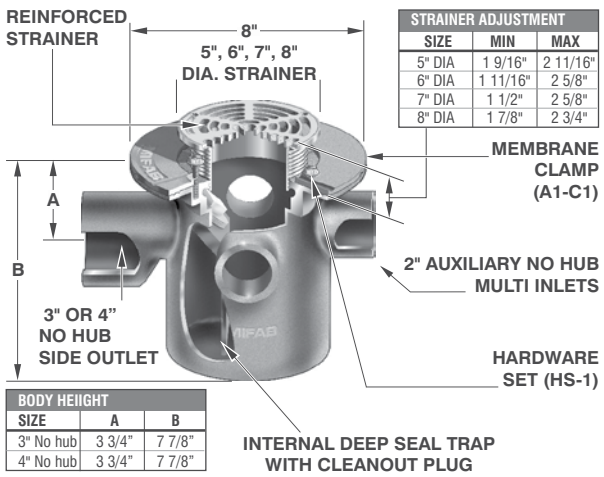

STRAINER ADJUSTMENT		
SIZE	MIN	MAX
5" DIA	1 9/16"	2 11/16"
6" DIA	1 11/16"	2 5/8"
7" DIA	1 1/2"	2 5/8"
8" DIA	1 7/8"	2 3/4"

BODY HEIIGHT		
SIZE	A	B
3" No hub	3 3/4"	7 7/8"
4" No hub	3 3/4"	7 7/8"

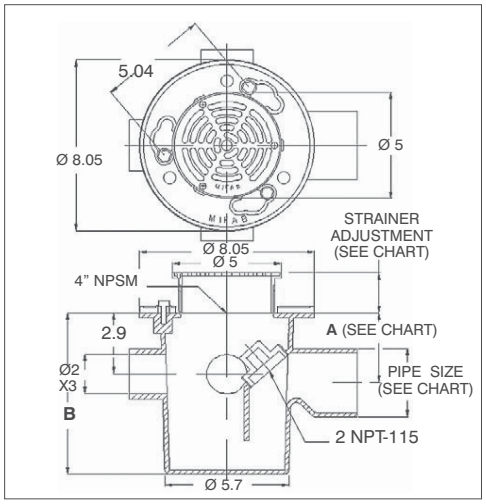

PARTS

F1170 BODY

(*)-(**)

A1-C1

HS-1

(*) Denotes strainer size (5, 6, 7 or 8)
(**) Denotes strainer) finish (-1 or -3)

FLOOR DRAIN WITH MULTI INLETS, ROUND STRAINER AND INTEGRAL TRAP				
MODEL NUMBER	WT. Lbs	OUTLET SIZE	STRAINER SIZE	LIST PRICE: NICKEL BRONZE (-1) STAINLESS STEEL (-3)
F1173, 4-C-5	21.00	3" or 4"	5" DIA	$ 1477.00
F1173, 4-C-6	21.50	3" or 4"	6" DIA	$ 1616.00
F1173, 4-C-7	22.00	3" or 4"	7" DIA	$ 1732.00
F1173, 4-C-8	23.00	3" or 4"	8" DIA	$ 1955.00

WHEN NO MEMBRANE CLAMP IS REQUIRED, DELETE SUFFIX (-C) AND DEDUCT **$103.00**

ANSI/ASME RATING
FREE AREA / LOAD RATING
SEE F1100-C CHART ON PG. 37 FOR RATINGS

F1160-C AND F1170-C VARIATIONS:

SUFFIX	DESCRIPTION	LIST PRICE	SUFFIX	DESCRIPTION	LIST PRICE
-5	Sediment bucket (A1-PB)	$ 144.00	-44	2" no hub side inlet (specify location)	$ 254.00
-6	Security screws (TR25 Torx & pin) (H-1039A)	$ 79.00	-F4-(1,3)	4" NB or SS round funnel	$ 583.00
-7	Trap seal primer tapping	$ 214.00	-F4-50	4" cast iron round funnel	$ 247.00
-7MG	MI-GARD, Floor Drain Trap Seal	See TSP book	-F6-(1,3)	6" NB or SS round funnel	$ 862.00
-8	Backwater valve (BV1250 Series) (2", 3", 4")	$ 497.00	-F6-50	6" cast iron round funnel	$ 395.00
-10	Decorative polished top	$ 221.00	-G-(1,3)	4" x 9" NB or SS oval funnel	$ 1204.00
-11	Acid resistant epoxy coated body (and clamp if needed)	$ 496.00	-G-50	4" x 9" C.I. oval funnel	$ 583.00
-13	Galvanized body (and clamp if needed)	$ 496.00	-J-(1,3)	3" x 1" NB or SS oval funnel	$ 607.00
-15	Extension (DD-50)	$ 185.00	-J-50	3" x 1" cast iron oval funnel	$ 276.00
-34	Closure plug (C1440 Series)	$ 477.00	-Z	Extended wide elastomeric flange on top (use Z5 or ZS top)	$ 1724.00

F1170-C-SD FLOOR DRAIN WITH MULTI INLETS, SQUARE SOLID HINGED COVER & INTEGRAL TRAP F1170-C-SD

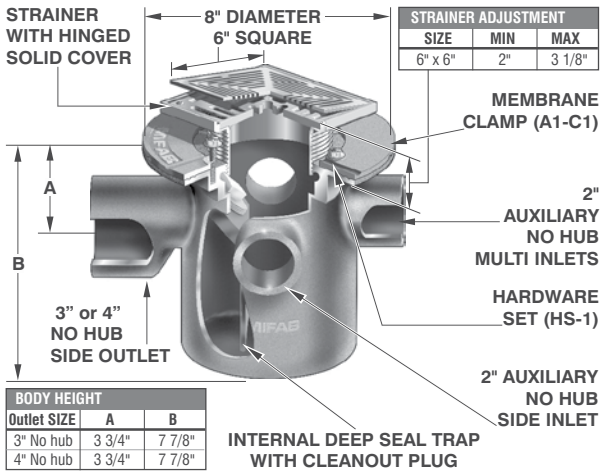

STRAINER ADJUSTMENT		
SIZE	MIN	MAX
6" x 6"	2"	3 1/8"

BODY HEIGHT		
Outlet SIZE	A	B
3" No hub	3 3/4"	7 7/8"
4" No hub	3 3/4"	7 7/8"

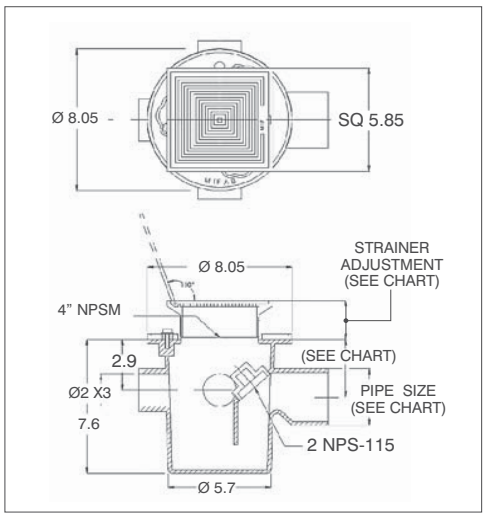

F1170 BODY

(SD6)-(*)

A1-C1

HS-1

PARTS

(*) Denotes strainer finish (-1 or -3)

FLOOR DRAIN WITH MULTI INLETS, SQUARE STRAINER AND INTEGRAL TRAP				
MODEL NUMBER	WT. Lbs	OUTLET SIZE	STRAINER SIZE	LIST PRICE: NICKEL BRONZE (-1) STAINLESS STEEL (-3)
F1173,4-C-SD6	25.50	3" or 4"	6" x 6"	$ 2471.00

WHEN NO MEMBRANE CLAMP IS REQUIRED, DELETE SUFFIX (-C) AND DEDUCT **$103.00**

ANSI/ASME RATING	
FREE AREA	LOAD RATING
12.0 IN^2	5,000-7,499 Lbs

Design and dimensions are subject to modification. Prices do not include applicable taxes. Visit **www.mifab.com** for the most recent product information.
MIFAB®, Inc., 1321 West 119th Street, Chicago, Illinois 60643-5109, USA Toll Free: 1-800-465-2736 • Fax: 1-773-341-3049
All sales subject to MIFAB's® Terms & Warranties. Please refer to inside front cover. sales@mifab.com • Canada Toll Free: 1-800-387-3880

F1212TC FLOOR DRAIN FOR MEMBRANE FLOOR AREAS F1212TC

PARTS	F1210 BODY	4x2-49	F1212-PC-50

H-1088	S4-49

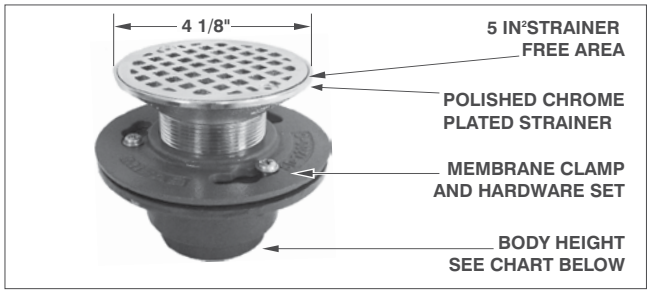

STRAINER ADJUSTMENT			ANSI/ASME RATING	BODY HEIGHT	
PIPE SIZE	MIN	MAX	LOAD RATING	PIPE SIZE	THREADED
2"	1 1/4"	2 3/8"	UP TO 2000 Lbs	2"	2 5/16"

FLOOR DRAIN FOR MEMBRANE FLOOR AREAS				LIST PRICE
MODEL NUMBER	WT. Lbs.	STRAINER SIZE	OUTLET SIZE	CHROME PLATED (-49)
F1212TC	3.65	4 1/8" DIA.	2" I.P.S.	$ 561.00
F1212TC-S4	4.00	4 1/4" x 4 1/4"	2" I.P.S.	$ 561.00

F1212TC-S4

F1220 FLOOR DRAIN FOR NON MEMBRANE & CORE DRILL FLOOR AREAS F1220

PARTS

A4 BODY

(*)-(**)

(*) DENOTES STRAINER DIAMETER (5", 6", 7" OR 8")
(**) DENOTES STRAINER FINISH (-1, -3 OR -4)

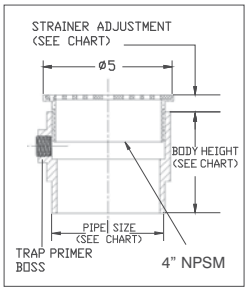

F1220 Series available with all strainers on pages 50-51. Add price of strainer to A4 body price on page 302.

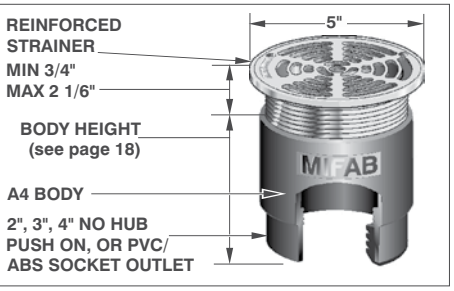

FLOOR DRAIN FOR NON MEMBRANE & CORE DRILL FLOOR AREAS					
MODEL NUMBER	WT. Lbs	OUTLET SIZE	STRAINER SIZE	NICKEL BRONZE (-1) STAINLESS STEEL (-3)	LIST PRICE DUCTILE IRON (-4)
F1222,3,4	5.00	2,3,4" NO HUB	5" DIA	$ 632.00	$ 555.00
F1222,3,4P	6.00	2,3,4" PUSH ON	5" DIA	$ 632.00	$ 555.00
F1222,3,4-30/31	3.00	2,3,4" PVC/ABS	5" DIA	$ 632.00	$ 555.00

ANSI/ASME RATING		
STRAINER	FREE AREA	LOAD RATING
5" DIA DI	8 IN²	OVER 10,000 lbs
5" DIA NB	8 IN²	UP TO 2000 lbs
5" DIA SS	8 IN²	5000-7499 lbs

F1230 F1230 FLOOR DRAIN & F1230-WF WOOD DECK FLOOR DRAIN F1230

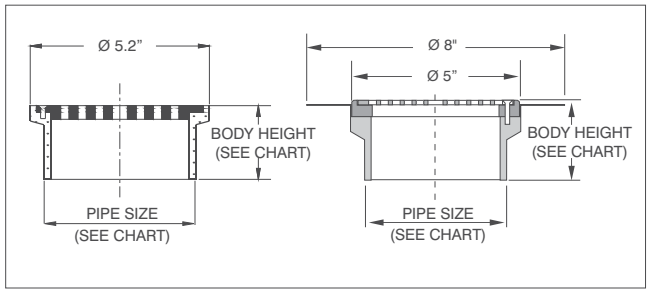

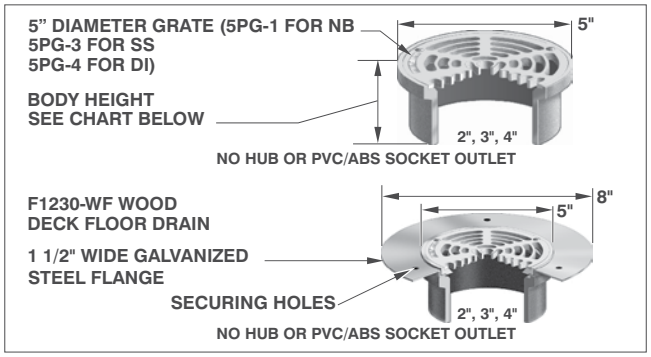

F1230 BODY HEIGHT		
PIPE SIZE	CAST IRON	PVC/ABS
2" NO HUB	2 1/2"	2 15/16"
3" NO HUB	2 1/2"	2 15/16"
4" NO HUB	2 1/2"	2 15/16"

F1230, F1230-WF ANSI/ASME RATING		
STRAINER	FREE AREA	LOAD RATING
NB GRATE	8 IN²	UP TO 2000 lbs
DI GRATE	8 IN²	OVER 10,000 lbs
SS GRATE	8 IN²	5000-7499 lbs

F1230 & F1230-WF FLOOR DRAIN					
MODEL NUMBER	WT. Lbs	OUTLET SIZE	STRAINER SIZE	LIST PRICE: NB BODY W/NB (-1)	LIST PRICE: CI BODY (-50) W/DUCTILE IRON (-4)
F1232,3,4	4.00	2", 3", 4"	5" DIA	$ 408.00	$ 299.00
F1232,3,4-WF	4.75	2", 3", 4"	5" DIA	$ 565.00	$ 452.00
MODEL NUMBER	WT. Lbs	OUTLET SIZE	STRAINER SIZE	LIST PRICE: PVC OR ABS SOCKET BODY W/NICKEL BRONZE (-1)	LIST PRICE: PVC OR ABS SOCKET BODY W/DUCTILE IRON (-4)
F1232,3,4-30-,31	2.00	2", 3", 4"	5" DIA	$ 408.00	$ 299.00
F1232,3,4-WF-30,31	2.75	2", 3", 4"	5" DIA	$ 565.00	$ 452.00

F1240 NON ADJUSTABLE AREA DRAIN F1240

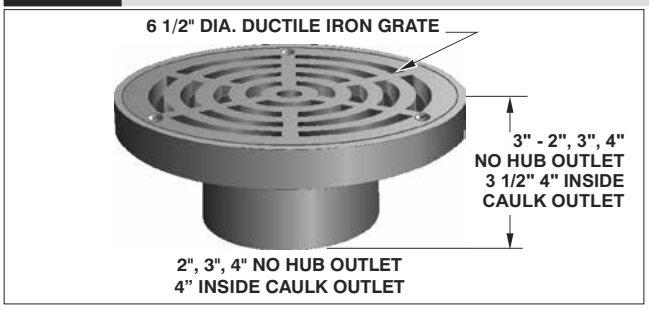

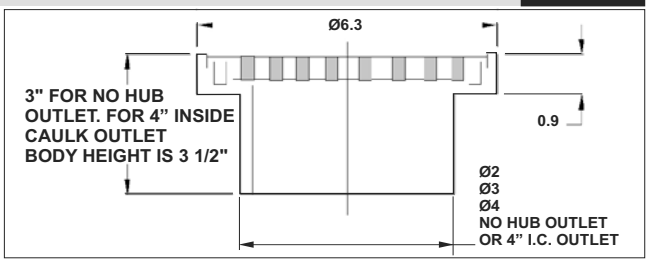

F1240 ANSI/ASME RATING		
STRAINER	FREE AREA	LOAD RATING
F1240-PG-4	10.0 IN²	OVER 10,000 lbs

Note: Flow through shank of top assembly is equal to 4" pipe.

F1240 NON ADJUSTABLE AREA DRAIN				
MODEL NUMBER	WT. Lbs	OUTLET SIZE	STRAINER SIZE	LIST PRICE DUCTILE IRON (-4)
F1242,3,4	5.00	2", 3", 4"	6 1/2" DIA	$ 451.00
F1244X	5.00	4" I.C.	6 1/2"DIA	$ 451.00

F1300-C AREA DRAIN WITH 7" ROUND ADJUSTABLE HEAVY DUTY TRACTOR GRATE W/MEMBRANE CLAMP F1300-C

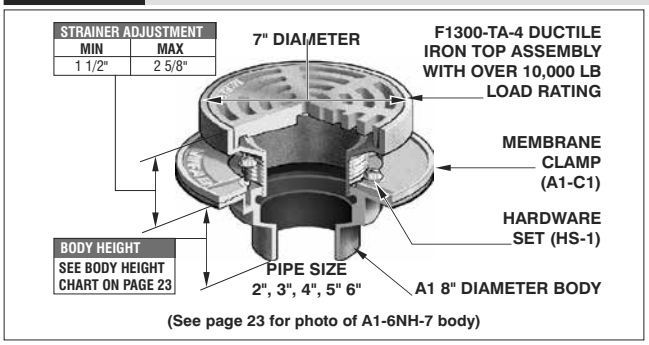

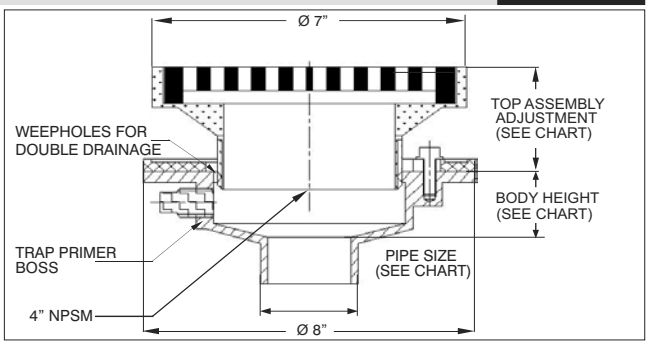

ANSI/ASME RATING		
STRAINER	FREE AREA	LOAD RATING
F1300-TA-1	11.0 IN²	OVER 10,000 lbs
F1300-TA-3	11.0 IN²	OVER 10,000 lbs
F1300-TA-4	11.0 IN²	OVER 10,000 lbs

Note: Flow through shank of top assembly is equal to 4" pipe.

PARTS	A1 BODY	F1300-TA-4	A1-C1	HS-1

F1300-C AREA DRAIN WITH 7" ROUND ADJUSTABLE HEAVY DUTY TRACTOR GRATE WITH MEMBRANE CLAMP					
MODEL NUMBER	WT. Lbs	STRAINER DESCRIPTION	LIST PRICE LACQUERED CAST IRON BODY WITH: DUCTILE IRON (-4)	NICKEL BRONZE (-1)	STAINLESS STEEL (-3)
F1302,3,4-C	12.00	7" Dia. Adj. tractor grate	$ 569.00	$ 1254.00	$ 1254.00
F1302,3,4-C-14	12.00	7" Dia. Adj. flat grate	$ 605.00	$ 1023.00	$ 1023.00
F1302,3,4-C-Y	12.00	7" Dia. Non-Adj. tractor grate	$ 605.00	$ 1023.00	$ 1023.00
F1302,3,4-C-Y-14	12.00	7" Dia. Non-Adj. flat grate	$ 605.00	$ 1023.00	$ 1023.00

WHEN NO MEMBRANE CLAMP IS REQUIRED DELETE SUFFIX (-C) AND DEDUCT **$103.00**

F1300-C OPTIONAL VARIATIONS:

SUFFIX	DESCRIPTION	LIST PRICE	SUFFIX	DESCRIPTION	LIST PRICE
-5	Sediment bucket (A1-MB)	$ 185.00	-150	Half grate	$ 201.00
-6	Vandal proof secured grate (TR30 Torx and pin) (H-1072)	$ 195.00	-175	Three quarter grate	$ 201.00
-7	Trap seal primer tapping	$ 196.00	-F4-(1,3)	4" NB or SS round funnel	$ 583.00
-7MG	MI-GARD, Floor Drain Trap Seal	See TSP Book	-F4-50	4" cast iron round funnel	$ 247.00
-8	Backwater valve (2", 3", 4") (BV1250 Series) (2", 3", 4")	$ 497.00	-F6-(1,3)	6" NB or SS round funnel	$ 862.00
-11	All acid resistant epoxy coated	$ 657.00	-F6-50	6" cast iron round funnel	$ 395.00
-12	Galvanized top assembly	$ 284.00	-G-(1,3)	4" x 9" NB or SS oval funnel	$ 1204.00
-13	All galvanized	$ 560.00	-G-50	4" x 9" C.I. oval funnel	$ 583.00
-15	Extension (DD-50)	$ 185.00	-J-(1,3)	3" x 1" NB or SS oval funnel	$ 607.00
-21	Secondary S.S. flat strainer (2", 3", 4") (FD-9600 series)	$ 78.00	-J-50	3" x 1" cast iron oval funnel	$ 276.00
-28	Stainless Steel Body (Type 304) (2", 3", 4" No Hub only)	$ 1581.00	P	Push on outlet (2", 3" or 4")	No Add
-30	PVC Socket Connection Body (2", 3" or 4")	No Add	T	Threaded outlet (2", 3" or 4")	$ 107.00
-31	ABS Socket Connection Body (2", 3" or 4")	No Add	-Z	Extended wide elastomeric flange on top (use Z5 or ZS top)	$ 1724.00
-32	2", 3", 4" Integral deep seal trap (MI-950 Series) See MI-950, pg. 289		X	Inside caulk outlet (2", 3" or 4")	No Add
-34	Closure plug (C1440 Series)	$ 477.00	5	5" no hub outlet	$ 707.00
-40	Underdeck clamp (A1-C3)	$ 196.00	5T	5" threaded outlet	$ 707.00
-41	Sump receiver (A1-BP)	$ 337.00	5X	5" inside caulk outlet	$ 707.00
-90	Threaded side outlet (2", 3") (N/A -30, -31) No Add for -NH	$ 287.00	6	6" no hub outlet	$ 707.00
-90	Threaded side outlet (4") (N/A -30, -31) No Add for -NH	$ 535.00	6P	6" push on outlet*	$ 707.00

*PVC/ABS SOCKET BODIES AVAILABLE FOR 2", 3", 4" CONNECTION SIZES

*SPECIFY POG-6 FOR C.I. PIPE AND POG-6-PVC FOR PVC PIPE. 2", 3", 4" SIZES USE SAME GASKET.
*ADD -NH TO -90 FOR NO HUB OUTLET - NO ADD .

Design and dimensions are subject to modification. Prices do not include applicable taxes. Visit **www.mifab.com** for the most recent product information.
MIFAB®, Inc., 1321 West 119th Street, Chicago, Illinois 60643-5109, USA Toll Free: 1-800-465-2736 • Fax: 1-773-341-3049
All sales subject to MIFAB's® Terms & Warranties. Please refer to inside front cover. sales@mifab.com • Canada Toll Free: 1-800-387-3880

F1320-C AREA DRAIN WITH 9" ROUND ADJUSTABLE HEAVY DUTY TRACTOR GRATE W/MEMBRANE CLAMP F1320-C

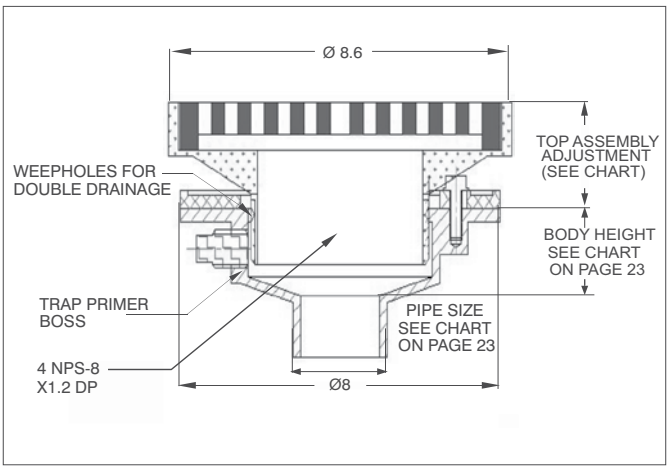

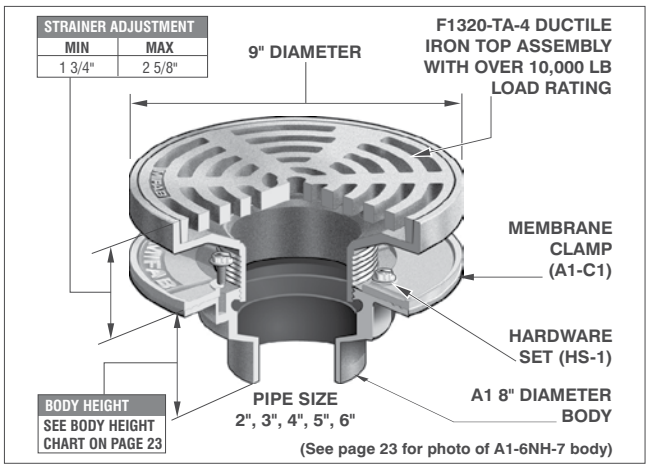

(*) DENOTES STRAINER FINISH (-1, -3 OR- 4)

ANSI/ASME RATING		
STRAINER	FREE AREA	LOAD RATING
F1320-TA-1	18.0 IN^2	OVER 10,000 lbs
F1320-TA-3	18.0 IN^2	OVER 10,000 lbs
F1320-TA-4	18.0 IN^2	OVER 10,000 lbs

PARTS

A1 BODY	F1320-TA-(*)	A1-C1	HS-1

*ADD 3/8" TO 9" STRAINER DIAMETER AND 3/16" TO STRAINER HEIGHT FOR NB OR SS VENEER

F1320-C AREA DRAIN WITH 9" ROUND ADJUSTABLE HEAVY DUTY TRACTOR GRATE WITH MEMBRANE CLAMP					
MODEL NUMBER	WT. Lbs	STRAINER DESCRIPTION	LIST PRICE LACQUERED CAST IRON BODY WITH: DUCTILE IRON (-4)	NICKEL BRONZE VENEER (-1)	STAINLESS STEEL VENEER (-3)
F1322,3,4-C	17.50	9" Dia. Adj. tractor grate	$ 1078.00	$ 1730.00	$ 1730.00
F1322,3,4-C-14	17.50	9" Dia. Adj. flat grate	$ 1078.00	$ 1730.00	$ 1730.00
F1322,3,4-C-Y	17.50	9" Dia. Non-Adj. tractor grate	$ 686.00	$ 1398.00	$ 1398.00
F1322,3,4-C-Y-14	17.50	9" Dia. Non-Adj. flat grate	$ 665.00	$ 1361.00	$ 1361.00

WHEN NO MEMBRANE CLAMP IS REQUIRED, DELETE SUFFIX (-C) & DEDUCT **$103.00** **NOTE:** FLOW THROUGH SHANK OF TOP ASSEMBLY IS EQUAL TO 4" PIPE.

F1320-C OPTIONAL VARIATIONS:

SUFFIX	DESCRIPTION	LIST PRICE
-5	Sediment bucket (A1-MB)	$ 185.00
-6	Vandal proof secured grate (TR30 Torx & Pin) (H-1072)	$ 195.00
-7	Trap seal primer tapping	$ 196.00
-7MG	MI-GARD, Floor Drain Trap Seal	See TSP Book
-8	Backwater valve (BV1250 Series) (2", 3", 4")	$ 497.00
-11	All acid resistant epoxy coated	$ 654.00
-12	Galvanized top assembly	$ 284.00
-13	All galvanized	$ 560.00
-15	Extension, Per 2" (DD-50)	$ 185.00
-21	Secondary flat strainer (FD-9600 Series)	$ 78.00
-25-1	Solid Secured Hinged NB Cover	$ 631.00
-28	Stainless Steel Body (Type 304) (2", 3", 4" No Hub only)	$ 1581.00
-30	PVC Socket Connection Body* (2", 3", 4")	No Add
-31	ABS Socket Connection Body* (2", 3", 4")	No Add
-32	2", 3", 4" Integral deep seal trap (MI-950 Series)	See MI-950, pg. 289
-34	Closure plug (C1440 Series)	$ 477.00
-40	Underdeck clamp (A1-C3)	$ 196.00
-41	Sump receiver (A1-BP)	$ 337.00
-90	Threaded side outlet (2", 3") (N/A -30, -31) No Add for -NH	$ 287.00
-90	Threaded side outlet (4") (N/A -30, -31) No Add for -NH	$ 535.00
-150	Half grate	$ 201.00
-175	Three quarter grate	$ 201.00
-F4-(1,3)	4" NB or SS round funnel	$ 583.00
-F4-50	4" cast iron round funnel	$ 247.00
-F6-(1,3)	6" NB or SS round funnel	$ 862.00
-F6-50	6" cast iron round funnel	$ 395.00
-G-(1,3)	4" x 9" NB or SS oval funnel	$ 1204.00
-G-50	4" x 9" C.I. oval funnel	$ 583.00
-J-(1,3)	3" x 1" NB or SS oval funnel	$ 607.00
-J-50	3" x 1" cast iron oval funnel	$ 276.00
P	Push on outlet (2", 3" or 4")	No Add
T	Threaded outlet (2", 3" or 4")	$ 107.00
-Z	Extended wide elastomeric flange on top (F1530-TA)	$ 1724.00
X	Inside caulk outlet (2", 3", or 4")	No Add
5	5" no hub outlet	$ 707.00
5T	5" threaded outlet	$ 707.00
5X	5" inside caulk outlet	$ 707.00
6	6" no hub outlet	$ 707.00
6P	6" push on outlet*	$ 707.00

*PVC/ABS SOCKET BODIES AVAILABLE FOR 2", 3", 4" CONNECTION SIZES
*ADD -NH TO -90 FOR NO HUB OUTLET - NO ADD.
*SPECIFY POG-6 FOR C.I. PIPE AND POG-6-PVC FOR PVC PIPE. 2", 3", 4" SIZES USE SAME GASKET.

F1320-C-TFB AREA DRAIN WITH 9" ROUND ADJ. HEAVY DUTY TRACTOR GRATE MOUNTED IN TRUE FIT BUCKET W/MEMBRANE CLAMP F1320-C-TFB

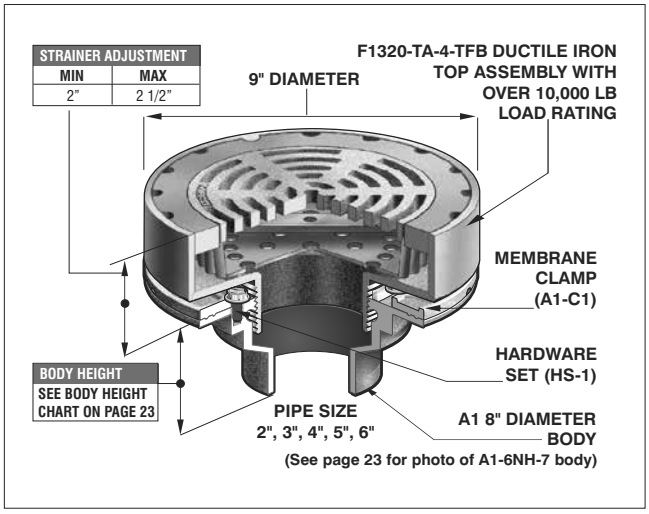

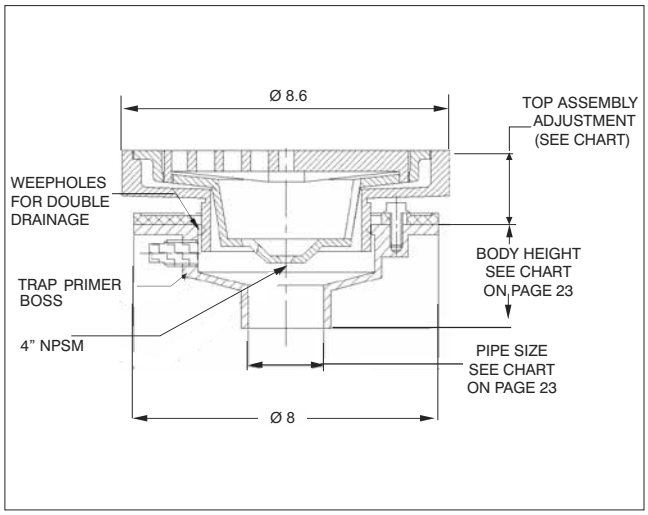

(*) DENOTES STRAINER FINISH (-1, -3 OR -4)

ANSI/ASME RATING		
STRAINER	FREE AREA	LOAD RATING
F1320-TFB-4	18.0 IN²	OVER 10,000 lbs

*ADD 3/8" TO 9" STRAINER DIAMETER AND 3/16" TO STRAINER HEIGHT FOR NB OR SS VENEER

PARTS

A1 BODY	F1320-TA-(*)-TFB	A1-C1	HS-1

(*) Denotes strainer finish (-1, -3 or -4)

F1320-C-TFB AREA DRAIN WITH 9" ROUND ADJ. HEAVY DUTY TRACTOR GRATE MOUNTED IN TRUE FIT BUCKET WITH MEMBRANE CLAMP					
MODEL NUMBER	WT. Lbs	STRAINER DESCRIPTION	LIST PRICE LACQUERED CAST IRON BODY WITH: DUCTILE IRON (-4)	NICKEL BRONZE VENEER (-1)	STAINLESS STEEL VENEER (-3)
F1322,3,4-C-TFB	19.00	9" Dia. Adj. tractor grate	$ 823.00	$ 1512.00	$ 1512.00

WHEN NO MEMBRANE CLAMP IS REQUIRED, DELETE SUFFIX (-C) AND DEDUCT **$ 103.00**

F1320-C-TFB OPTIONAL VARIATIONS:

SUFFIX	DESCRIPTION	LIST PRICE	SUFFIX	DESCRIPTION	LIST PRICE
-6	Vandal proof secured grate (TR30 Torx and pin) (H-1072)	$ 195.00	-175	Three quarter grate	$ 201.00
-7	Trap seal primer tapping	$ 196.00	-F4-(1,3)	4" NB or SS round funnel	$ 583.00
-7MG	MI-GARD, Floor Drain Trap Seal	See TSP Book	-F4-50	4" cast iron round funnel	$ 247.00
-8	Backwater valve (2", 3", 4") (BV1250 Series) (2", 3", 4")	$ 497.00	-F6-(1,3)	6" NB or SS round funnel	$ 862.00
-11	All acid resistant epoxy coated	$ 698.00	-F6-50	6" cast iron round funnel	$ 395.00
-12	Galvanized top assembly	$ 284.00	-G-(1,3)	4" x 9" NB or SS oval funnel	$ 1204.00
-13	All galvanized	$ 612.00	-G-50	4" x 9" C.I. oval funnel	$ 583.00
-15	Extension (DD-50)	$ 185.00	-J-(1,3)	3" x 1" NB or SS oval funnel	$ 607.00
-21	Secondary S.S. flat strainer (2", 3", 4") (FD-9600 series)	$ 78.00	-J-50	3" x 1" cast iron oval funnel	$ 276.00
-28	Stainless Steel Body (Type 304) (2", 3", 4" No Hub only)	$ 1581.00	P	Push on outlet (2", 3" or 4")	No Add
-30	PVC Socket Connection Body (2", 3" or 4")	No Add	T	Threaded outlet (2", 3" or 4")	$ 107.00
-31	ABS Socket Connection Body (2", 3" or 4")	No Add	-Z	Extended wide elastomeric flange on top (use Z5 or ZS top)	$ 1724.00
-32	2", 3", 4" Integral deep seal trap (MI-950 series)	See MI-950, pg. 289	X	Inside caulk outlet (2", 3" or 4")	No Add
-34	Closure plug (C1440 Series)	$ 477.00	5	5" no hub outlet	$ 707.00
-40	Underdeck clamp (A1-C3)	$ 196.00	5T	5" threaded outlet	$ 707.00
-41	Sump receiver (A1-BP)	$ 337.00	5X	5" inside caulk outlet	$ 707.00
-90	Threaded side outlet (2", 3") (N/A -30, -31) No Add for -NH	$ 287.00	6	6" no hub outlet	$ 707.00
-90	Threaded side outlet (4") (N/A -30, -31) No Add for -NH	$ 535.00	6P	6" push on outlet*	$ 707.00
-150	Half grate	$ 201.00			

*PVC/ABS SOCKET BODIES AVAILABLE FOR 2", 3", 4" CONNECTION SIZES

*SPECIFY POG-6 FOR C.I. PIPE AND POG-6-PVC FOR PVC PIPE. 2", 3", 4" SIZES USE SAME GASKET.
*ADD -NH TO -90 FOR NO HUB OUTLET - NO ADD .

Design and dimensions are subject to modification. Prices do not include applicable taxes. Visit **www.mifab.com** for the most recent product information.
MIFAB®, Inc., 1321 West 119th Street, Chicago, Illinois 60643-5109, USA
Toll Free: 1-800-465-2736 • Fax: 1-773-341-3049
sales@mifab.com • Canada Toll Free: 1-800-387-3880
All sales subject to MIFAB's® Terms & Warranties. Please refer to inside front cover.

F1330C AREA DRAIN WITH 9" ROUND ADJUSTABLE HEAVY DUTY TRACTOR GRATE & DEEP SUMP F1330C

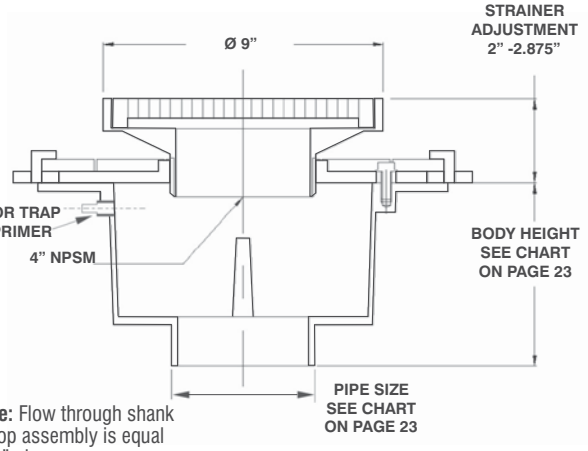

Note: Flow through shank of top assembly is equal to 4" pipe.

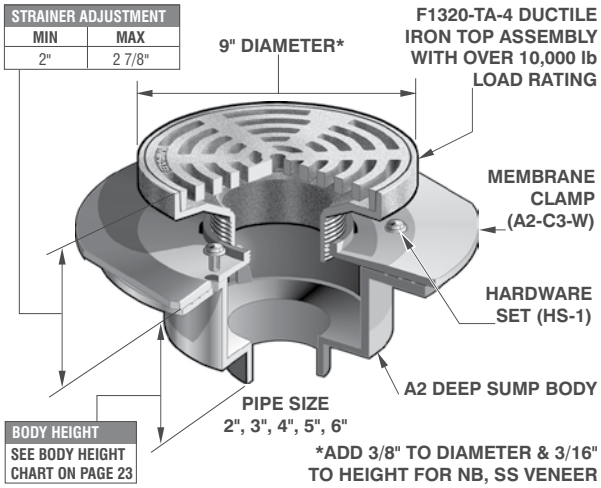

ANSI/ASME RATING		
STRAINER	FREE AREA	LOAD RATING
F1320-TA-1	18.0 IN^2	OVER 10,000 lbs
F1320-TA-3	18.0 IN^2	OVER 10,000 lbs
F1320-TA-4	18.0 IN^2	OVER 10,000 lbs

PARTS	A2 BODY	F1320-TA-(*)	A2-C3-WD	HS-1
	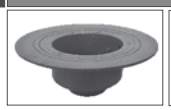			

(*) DENOTES STRAINER FINISH (-1, -3 OR -4)

AREA DRAIN WITH 9" ROUND ADJUSTABLE HEAVY DUTY TRACTOR GRATE & DEEP SUMP					
MODEL NUMBER	WT. Lbs	STRAINER DESCRIPTION	LIST PRICE LACQUERED CAST IRON BODY WITH:		
			DUCTILE IRON (-4)	NICKEL BRONZE (VENEER) (-1)	STAINLESS STEEL (VENEER) (-3)
F1332,3,4,6C	37.00	9" Dia. Adj. tractor grate	$ 1869.00	$ 2566.00	$ 2566.00

F1330C OPTIONAL VARIATIONS:

SUFFIX	DESCRIPTION	LIST PRICE
-5	Sediment bucket	$ 255.00
-6	Vandal proof secured grate (TR30 Torx & Pin) (H-1072)	$ 195.00
-7	Trap seal primer tapping	$ 196.00
-7MG	MI-GARD, Floor Drain Trap Seal	See TSP Book
-8	Backwater valve (BV1250 Series) (2", 3", 4")	$ 497.00
-11	All acid resistant epoxy coated	$ 1235.00
-12	Galvanized top assembly	$ 424.00
-13	All galvanized	$ 733.00
-15	Extension, Per 2" (DD-50)	$ 370.00
-16	Square top	See F1430C
-21	Secondary flat strainer (FD-9600 Series)	$ 78.00
-24	Solid secured cover	$ 631.00
-28	Stainless Steel Body (Type 304) (2", 3", 4" No Hub only)	$ 4702.00
-30	PVC Socket Connection Body* (2", 3", 4")	No Add
-31	ABS Socket Connection Body* (2", 3", 4")	No Add
-32	2", 3", 4" Integral deep seal trap (MI-950 Series)	See MI-950, pg. 289
-34	Closure plug (C1440 Series)	$ 477.00
-35	Stainless Steel mesh over bucket	$ 544.00
-40	Underdeck clamp (A2-C3)	$ 319.00
-41	Sump receiver (A2-BP)	$ 356.00
-90	Threaded side outlet (2", 3", 4") (N/A -30, -31) No Add for -NH	$ 481.00
150	Half grate	$ 201.00
175	Three quarter grate	$ 201.00
-C	Membrane clamp (A2-C3)	Standard
-F4-(1,3)	4" NB or SS round funnel	$ 583.00
-F4-50	4" cast iron round funnel	$ 247.00
-F6-(1,3)	6" NB or SS round funnel	$ 862.00
-F6-50	6" cast iron round funnel	$ 395.00
-G-(1,3)	4" x 9" NB or SS oval funnel	$ 1204.00
-G-50	4" x 9" C.I. oval funnel	$ 583.00
-J-(1,3)	3" x 1" NB or SS oval funnel	$ 607.00
-J-50	3" x 1" cast iron oval funnel	$ 276.00
P	Push on outlet (2", 3" or 4")	No Add
T	Threaded outlet (2", 3" or 4")	$ 107.00
-Z	Extended wide elastomeric flange on top (F1530-TA)	$ 1724.00
X	Inside caulk outlet (2", 3", or 4")	No Add

*PVC/ABS SOCKET BODIES AVAILABLE FOR 2", 3", 4" CONNECTION SIZES
*ADD -NH TO -90 FOR NO HUB OUTLET - NO ADD.
*SPECIFY POG-6 FOR C.I. PIPE AND POG-6-PVC FOR PVC PIPE. 2", 3", 4" SIZES USE SAME GASKET.

F1340 AREA DRAIN WITH 12" ROUND ADJUSTABLE HEAVY DUTY TRACTOR GRATE F1340

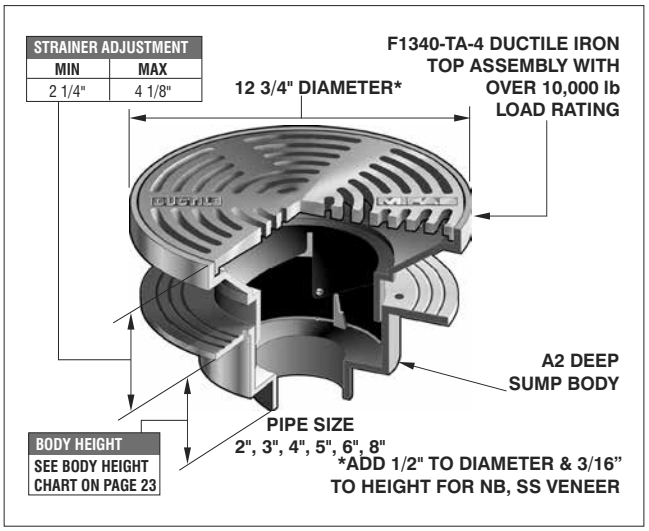

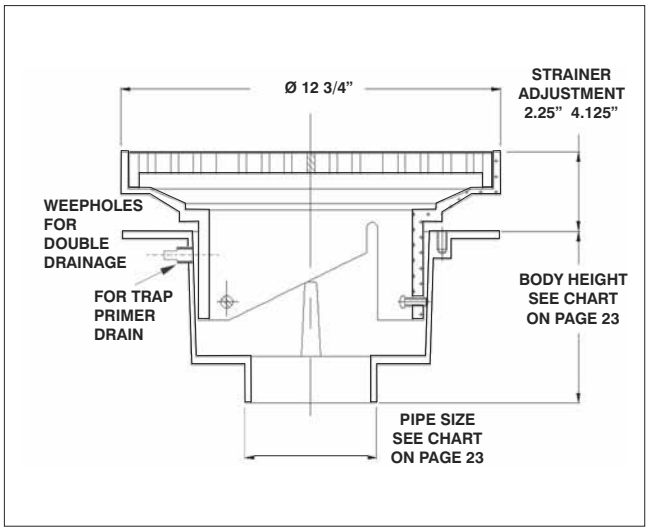

ANSI/ASME RATING		
STRAINER	FREE AREA	LOAD RATING
F1340-TA-1	33.0 IN²	OVER 10,000 lbs
F1340-TA-3	33.0 IN²	OVER 10,000 lbs
F1340-TA-4	33.0 IN²	OVER 10,000 lbs

PARTS	A2 BODY	F1340-TA-(*)

(*) DENOTES STRAINER FINISH (-1, -3 OR -4)

F1340 AREA DRAIN WITH 12" ROUND ADJUSTABLE HEAVY DUTY TRACTOR GRATE					
MODEL NUMBER	WT. Lbs	STRAINER DESCRIPTION	LIST PRICE LACQUERED CAST IRON BODY WITH:		
			DUCTILE IRON (-4)	NICKEL BRONZE (VENEER) (-1)	STAINLESS STEEL (VENEER) (-3)
F1342,3,4,6,8	39.00	12" Dia. Adj. tractor grate	$ 2573.00	$ 3487.00	$ 3487.00
F1342,3,4,6,8-14	39.00	12" Dia. Adj. flat grate	$ 1914.00	$ 2841.00	$ 2841.00
F1342,3,4,6,8-Y	39.00	12" Dia. Non-Adj. tractor grate	$ 1915.00	$ 2906.00	$ 2906.00
F1342,3,4,6,8-Y-14	39.00	12" Dia. Non-Adj. flat grate	$ 1299.00	$ 2260.00	$ 2260.00

WHEN A MEMBRANE CLAMP IS REQUIRED ADD SUFFIX (-C), NO ADD

F1340 OPTIONAL VARIATIONS:		
SUFFIX	DESCRIPTION	LIST PRICE
-5	Sediment bucket (A2-MB)	$ 357.00
-6	Vandal proof secured grate (TR30 Torx & Pin) (H-1072)	$ 195.00
-7	Trap seal primer tapping	$ 196.00
-7MG	MI-GARD, Floor Drain Trap Seal	See TSP Book
-8	Backwater valve (BV1250 Series) (2", 3", 4")	$ 497.00
-11	All acid resistant epoxy coated	$ 1108.00
-12	Galvanized top assembly	$ 424.00
-13	All galvanized	$ 839.00
-15	Extension, Per 2" (A2-XY)	$ 429.00
-16	Square top	See F1440
-21	Secondary flat strainer (FD-9600 Series)	$ 78.00
-24	Solid secured cover	$ 631.00
-28	Stainless Steel Body (Type 304) (2", 3", 4" No Hub only)	$ 4702.00
-30	PVC Socket Connection Body* (2", 3", 4")	No Add
-31	ABS Socket Connection Body* (2", 3", 4")	No Add
-32	2", 3", 4" Integral deep seal trap (MI-950 Series)	See MI-950, pg. 289
-34	Closure plug (C1440 Series)	$ 477.00
-35	Stainless Steel mesh over bucket	$ 544.00
-40	Underdeck clamp (A2-C3)	$ 319.00
-41	Sump receiver (A2-BP)	$ 356.00
-90	Threaded side outlet (2", 3", 4") (N/A -30, -31) No Add for -NH	$ 481.00
-150	Half grate	$ 201.00
-175	Three quarter grate	$ 201.00
-C	Membrane clamp (A2-C3)	No Add
-F4-(1,3)	4" NB or SS round funnel	$ 583.00
-F4-50	4" cast iron round funnel	$ 247.00
-F6-(1,3)	6" NB or SS round funnel	$ 862.00
-F6-50	6" cast iron round funnel	$ 395.00
-G-(1,3)	4" x 9" NB or SS oval funnel	$ 1204.00
-G-50	4" x 9" C.I. oval funnel	$ 583.00
-J-(1,3)	3" x 1" NB or SS oval funnel	$ 607.00
-J-50	3" x 1" cast iron oval funnel	$ 276.00
P	Push on outlet (2", 3" or 4")	No Add
T	Threaded outlet (2", 3" or 4")	$ 107.00
-Z	Extended wide elastomeric flange on top (F1540-TA)	$ 1724.00
X	Inside caulk outlet (2", 3", or 4")	No Add

*PVC/ABS SOCKET BODIES AVAILABLE FOR 2", 3", 4" CONNECTION SIZES
*SPECIFY POG-6 FOR C.I. PIPE AND POG-6-PVC FOR PVC PIPE. 2", 3", 4" SIZES USE SAME GASKET. *ADD -NH TO -90 FOR NO HUB OUTLET - NO ADD.

Design and dimensions are subject to modification. Prices do not include applicable taxes. Visit **www.mifab.com** for the most recent product information.
MIFAB®, Inc., 1321 West 119th Street, Chicago, Illinois 60643-5109, USA
Toll Free: 1-800-465-2736 • Fax: 1-773-341-3049
sales@mifab.com • Canada Toll Free: 1-800-387-3880
All sales subject to MIFAB's® Terms & Warranties. Please refer to inside front cover.

F1340-TFB AREA DRAIN WITH 12" ROUND ADJ. HEAVY DUTY TRACTOR GRATE MOUNTED IN TRUE FIT BUCKET F1340-TFB

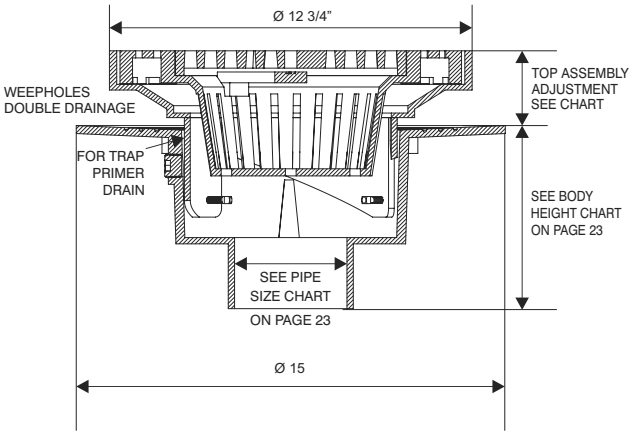

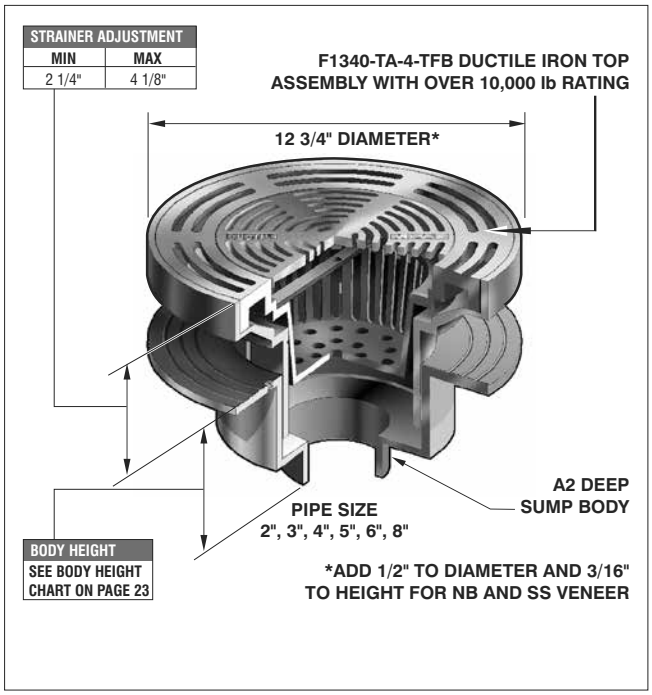

ANSI/ASME RATING		
STRAINER	FREE AREA	LOAD RATING
F1340-TFB-1	33.0 IN^2	OVER 10,000 lbs
F1340-TFB-3	33.0 IN^2	OVER 10,000 lbs
F1340-TFB-4	33.0 IN^2	OVER 10,000 lbs

PARTS

A2 BODY	F1340-TA-(*)-TFB

(*) DENOTES STRAINER FINISH (-1, -3 OR -4)

F1340-TFB AREA DRAIN WITH 12" ROUND ADJUSTABLE HEAVY DUTY TRACTOR GRATE WITH MEMBRANE CLAMP					
MODEL NUMBER	WT. Lbs	STRAINER DESCRIPTION	LIST PRICE LACQUERED CAST IRON BODY WITH:		
			DUCTILE IRON (-4)	NICKEL BRONZE (VENEER) (-1)	STAINLESS STEEL (VENEER) (-3)
F1342,3,4,6-TFB	45.00	12" Dia. Adj. tractor grate	$ 1955.00	$ 2892.00	$ 2892.00
F1348-TFB	48.00	12" Dia. Adj. tractor grate	$ 2354.00	$ 3284.00	$ 3284.00

FOR F1352,3,4,6-TFB, ADD A3 BODY LIST PRICE OF **$783.00** TO THE ABOVE PRICE. WHEN A MEMBRANE CLAMP IS REQUIRED, ADD SUFFIX (-C), NO ADD

F1340-TFB OPTIONAL VARIATIONS:		
SUFFIX	DESCRIPTION	LIST PRICE
-6	Vandal proof secured grate (TR30 Torx & Pin) (H-1072)	$ 195.00
-7	Trap seal primer tapping	$ 196.00
-7MG	MI-GARD, Floor Drain Trap Seal	See TSP book
-8	Backwater valve (BV1250 Series) (2", 3", 4")	$ 497.00
-11	All acid resistant epoxy coated	$ 1468.00
-12	Galvanized top assembly	$ 708.00
-13	All galvanized	$ 1246.00
-15	Extension, Per 2" (A2-XY)	$ 429.00
-21	Secondary flat strainer (FD-9600 Series)	$ 78.00
-28	Stainless Steel Body (Type 304) (2", 3", 4" No Hub only)	$ 4702.00
-30	PVC Socket Connection Body* (2", 3", 4")	No Add
-31	ABS Socket Connection Body* (2", 3", 4")	No Add
-32	2", 3", 4" Integral deep seal trap (MI-950 Series)	See MI-950, pg. 289
-34	Closure plug (C1440 Series)	$ 477.00
-35	Stainless Steel mesh over bucket	$ 544.00
-40	Underdeck clamp (A2-C3)	$ 319.00
-41	Sump receiver (A2-BP)	$ 356.00
-90	Threaded side outlet (2", 3", 4") (N/A -30, -31) No Add for -NH	$ 481.00
-150	Half grate	$ 201.00
-175	Three quarter grate	$ 201.00
-C	Membrane clamp (A2-C3)	No Add
-F4-(1,3)	4" NB or SS round funnel	$ 583.00
-F4-50	4" cast iron round funnel	$ 247.00
-F6-(1,3)	6" NB or SS round funnel	$ 862.00
-F6-50	6" cast iron round funnel (F1530-TA or F1540-TA)	$ 395.00
-G-(1,3)	4" x 9" NB or SS oval funnel	$ 1204.00
-G-50	4" x 9" C.I. oval funnel	$ 583.00
-J-(1,3)	3" x 1" NB or SS oval funnel	$ 607.00
-J-50	3" x 1" cast iron oval funnel	$ 276.00
P	Push on outlet (2", 3" or 4")	No Add
T	Threaded outlet (2", 3" or 4")	$ 107.00
-Z	Extended wide elastomeric flange on top	$ 1724.00
X	Inside caulk outlet (2", 3", or 4")	No Add

*PVC/ABS SOCKET BODIES AVAILABLE FOR 2", 3", 4" CONNECTION SIZES
*ADD -NH TO -90 FOR NO HUB OUTLET - NO ADD.

*SPECIFY POG-6 FOR C.I. PIPE AND POG-6-PVC FOR PVC PIPE. 2", 3", 4" SIZES USE SAME GASKET.

F1340-Y-Q SHALLOW BODY AREA DRAIN WITH 12" ROUND, NON ADJUSTABLE HEAVY DUTY TRACTOR GRATE F1340-Y-Q

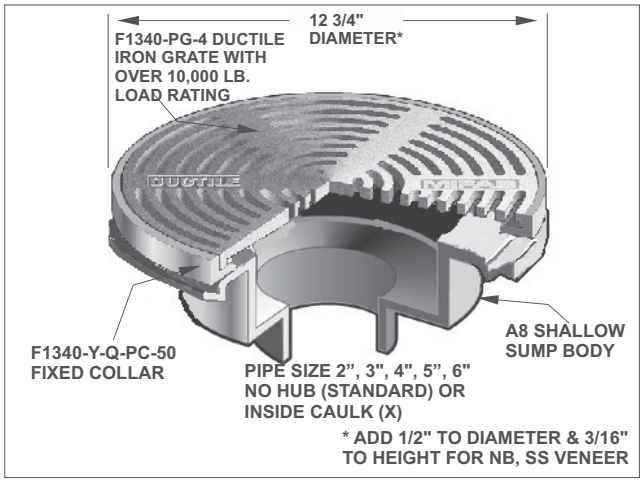

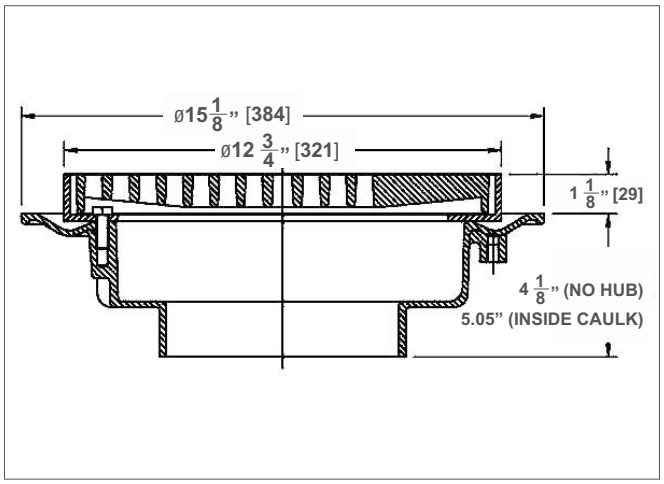

ANSI/ASME RATING		
STRAINER	FREE AREA	LOAD RATING
F1340-Y-Q-TA-1	33.0 IN²	OVER 10,000 lbs
F1340-Y-Q-TA-3	33.0 IN²	OVER 10,000 lbs
F1340-Y-Q-TA-4	33.0 IN²	OVER 10,000 lbs

PARTS

H-1136	F1340-Y-Q-PC-50	A8 BODY	F1340-PG-(*)

(*) DENOTES STRAINER FINISH (-1,-3 OR -4)

F1340-Y-Q SHALLOW BODY AREA DRAIN WITH 12" ROUND, NON ADJUSTABLE HEAVY DUTY TRACTOR GRATE					
MODEL NUMBER	WT. Lbs	STRAINER DESCRIPTION	LIST PRICE LACQUERED CAST IRON BODY WITH: DUCTILE IRON (-4)	NICKEL BRONZE (VENEER)(-1)	STAINLESS STEEL (VENEER)(-3)
F1342,3,4,6-Y-Q-14	32.00	12" DIA. Non-Adj. flat grate	$ 1215.00	$ 2156.00	$ 2156.00
F1342,3,4,6-Y-Q	32.00	12" DIA. Non-Adj. tractor grate	$ 1215.00	$ 2156.00	$ 2156.00

WHEN A MEMBRANE CLAMP IS REQUIRED ADD SUFFIX (-C), NO ADD

F1340-Y-Q OPTIONAL VARIATIONS:		
SUFFIX	DESCRIPTION	LIST PRICE
-5	Sediment bucket (A2-MBL)	$ 269.00
-6	Vandal proof secured grate (TR30 Torx and Pin) (H-1072)	$ 195.00
-7	Trap seal primer tapping	$ 196.00
-7MG	MI-GARD, Floor Drain Trap Seal	See TSP Book
-8	Backwater valve (BV1250 Series) (2", 3", 4")	$ 497.00
-11	All acid resistant epoxy coated	$ 1108.00
-12	Galvanized top assembly	$ 496.00
-13	All galvanized	$ 737.00
-15	Extension (per 2") (A8-V2)	$ 429.00
-16	Square top	See F1440-Y-Q
-21	Secondary flat strainer (FD-9600 Series)	$ 78.00
-24	Solid secured cover	$ 631.00
-28	Stainless steel body (Type 304) (2", 3", 4", 5" or 6" No Hub only)	$ 4702.00
-32	2", 3", or 4" integral deep seal trap (MI-950 Series)	See MI-950, pg. 289
-34	Closure plug (C1440 Series)	$ 477.00
-35	Stainless steel mesh over bucket	$ 544.00
-40	Underdeck clamp (A8-UDC - Two half clamps and HS-14 hardware)	$ 319.00
-41	Sump receiver (A8-BP)	$ 356.00
-150	Half grate	$ 201.00
-175	Three quarter grate	$ 201.00
-F4-(1,3)	4" NB or SS round funnel	$ 583.00
-F4-50	4" cast iron round funnel	$ 247.00
-F6-(1,3)	6" NB or SS round funnel	$ 862.00
-F6-50	6" cast iron round funnel	$ 395.00
-G-(1,3)	4" x 9" NB or SS oval funnel	$ 1204.00
-G-50	4" x 9" cast iron oval funnel	$ 583.00
-J-(1,3)	3" x 1" NB or SS oval funnel	$ 607.00
-J-50	3" x 1" cast iron oval funnel	$ 276.00
X	Inside caulk outlet (3", 4", 5" or 6")	No Add
-Z	Extended wide elastomeric flange on top (F1540-TA)	$ 1724.00

Design and dimensions are subject to modification. Prices do not include applicable taxes. Visit **www.mifab.com** for the most recent product information.
MIFAB®, Inc., 1321 West 119th Street, Chicago, Illinois 60643-5109, USA Toll Free: 1-800-465-2736 • Fax: 1-773-341-3049
All sales subject to MIFAB's® Terms & Warranties. Please refer to inside front cover. sales@mifab.com • Canada Toll Free: 1-800-387-3880

F1350 AREA DRAIN WITH 12" ROUND ADJ. HEAVY DUTY TRACTOR GRATE & EXTRA DEEP SUMP F1350

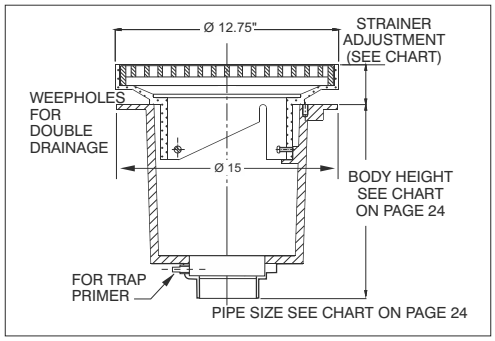

(*) DENOTES STRAINER FINISH (-1, -3 OR -4)

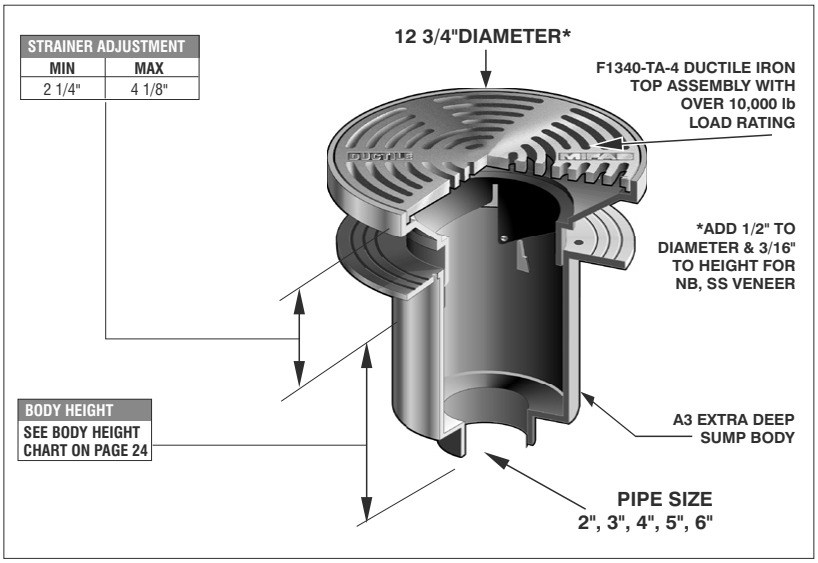

PARTS

A3 BODY	F1340-TA-(*)

AREA DRAIN WITH 12" ROUND ADJUSTABLE HEAVY DUTY TRACTOR GRATE & EXTRA DEEP SUMP					
MODEL NUMBER	WT. Lbs	STRAINER DESCRIPTION	LIST PRICE LACQUERED CAST IRON BODY WITH: DUCTILE IRON (-4)	NICKEL BRONZE (VENEER) (-1)	STAINLESS STEEL (VENEER) (-3)
F1352,3,4,6	50.00	12" Dia. Adj. tractor grate	$ 2095.00	$ 3167.00	$ 3167.00

WHEN A MEMBRANE CLAMP IS REQUIRED, ADD SUFFIX (-C), NO ADD.

F1350 OPTIONAL VARIATIONS:

SUFFIX	DESCRIPTION	F1350
-5	Sediment bucket (A2-MB)	$ 357.00
-6	Vandal proof secured grate (TR30 Torx and pin) (H-1072B)	$ 195.00
-7	Trap seal primer tapping	$ 196.00
-8	Backwater valve (BV1250 Series)(2", 3", 4")	$ 497.00
-11	Acid resistant epoxy coating	$ 1592.00
-12	Galvanized top assembly	$ 427.00
-13	All galvanized	$ 1578.00
-15	Extension, Per 2" (A2-XY)	$ 429.00
-16	Square top	See F1450
-17	with trap and cleanout (MI-OS Series)	See MI-OS
-18	with trap and oil cone and cleanout (MI-OS Series)	See MI-OS
-20	Secondary dome strainer (FS1500-PD)	$ 192.00
-21	Secondary flat strainer (FD-9600 Series)	$ 78.00
-24	Solid secured cover	$ 631.00
-28	Stainless Steel Body (Type 304) (2", 3", 4" No Hub only)	$ 9403.00
-30	PVC Socket Connection Body* (2", 3", 4")	No Add
-31	ABS Socket Connection Body* (2", 3", 4")	No Add
-32	2", 3", 4" Integral deep seal trap (MI-950 Series)	See MI-950, pg. 289
-34	Closure plug (C1440 Series)	$ 477.00
-35	Stainless Steel mesh over bucket	$ 544.00
-40	Underdeck clamp (A2-C3)	$ 319.00
-41	Sump receiver (A2-BP)	$ 356.00
-90	Threaded side outlet (2", 3", 4") (N/A -30, -31) No Add for -NH	$ 481.00
-150	Half grate	$ 201.00
-175	Three quarter grate	$ 201.00
-C	Membrane clamp (A2-C3)	No Add
-F4-(1,3)	4" NB or SS round funnel	$ 583.00
-F4-50	4" cast iron round funnel	$ 247.00
-F6-(1,3)	6" NB or SS round funnel	$ 862.00
-F6-50	6" cast iron round funnel	$ 395.00
-G-(1,3)	4" x 9" NB or SS oval funnel	$ 1204.00
-G-50	4" x 9" C.I. oval funnel	$ 583.00
-J-(1,3)	3" x 1" NB or SS oval funnel	$ 607.00
-J-50	3" x 1" cast iron oval funnel	$ 276.00
P	Push on outlet (2", 3" or 4")	No Add
T	Threaded outlet (2", 3" or 4")	$ 107.00
-TFB	True Fit bucket strainer top assembly	$ 352.00
-Z	Extended wide elastomeric on top (F1540-TA)	$ 1724.00

*SPECIFY POG-6 FOR C.I. PIPE AND POG-6-PVC FOR PVC PIPE. 2", 3", 4" SIZES USE SAME GASKET. * ADD -NH TO -90 FOR NO HUB OUTLET - NO ADD .
*PVC/ABS SOCKET BODIES AVAILABLE FOR 2", 3", 4" CONNECTION SIZES

F1350-Y-36 GARBAGE CAN WASH DRAIN WITH 12" ROUND HEAVY DUTY TRACTOR GRATE & EXTRA DEEP SUMP F1350-Y-36

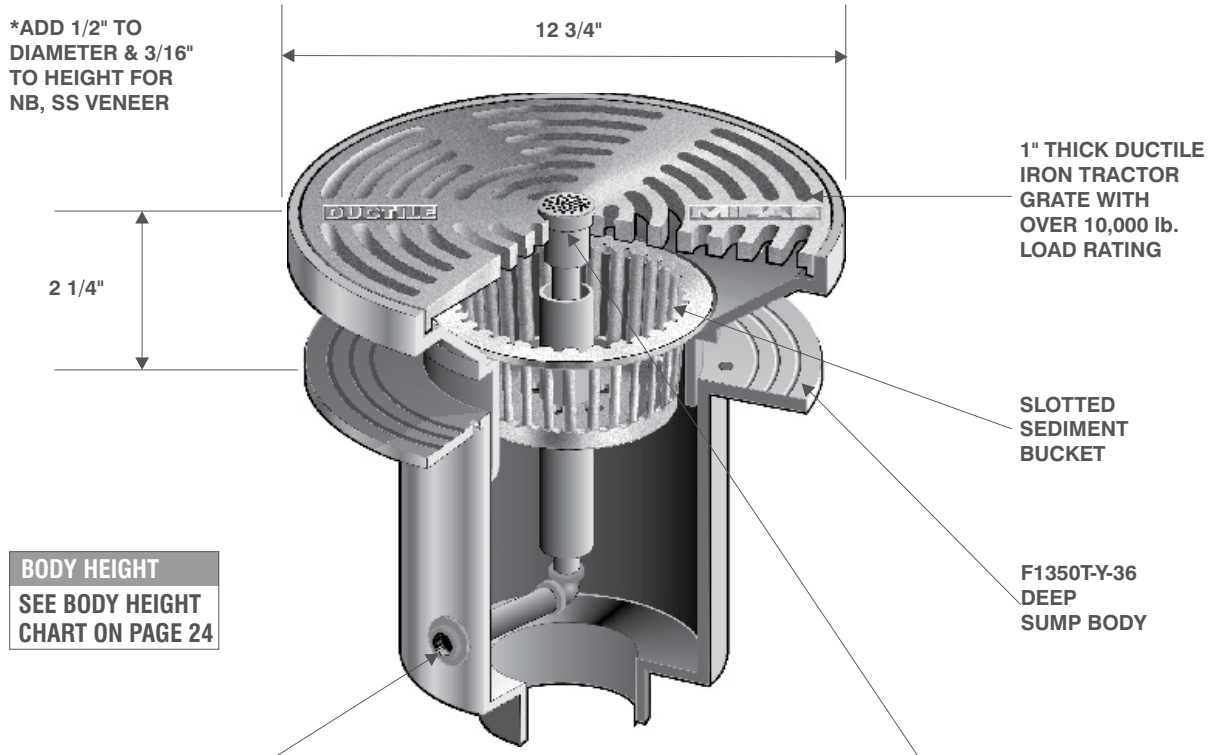

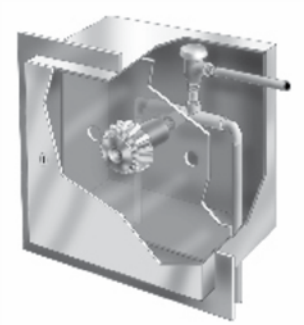

Typically installed with MIFAB's F1670 water supply control box. See page 80

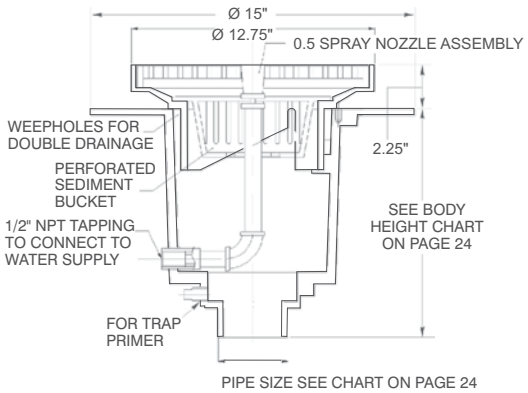

F1350-Y-36 GARBAGE CAN WASH DRAIN WITH 12" ROUND HEAVY DUTY TRACTOR GRATE AND EXTRA DEEP SUMP

MODEL NUMBER	WT. Lbs	STRAINER DESCRIPTION	LIST PRICE LACQUERED CAST IRON BODY WITH: DUCTILE IRON (-4)	NICKEL BRONZE (VENEER) (-1)	STAINLESS STEEL (VENEER) (-3)
F1352,3,4,6-Y-36	55.00	12 3/4" Dia. Adj. tractor grate	$ 3695.00	$ 4739.00	$ 4739.00

WHEN A MEMBRANE CLAMP IS REQUIRED, ADD SUFFIX (-C), NO ADD.

F1350-Y-36 OPTIONAL VARIATIONS:

SUFFIX	DESCRIPTION	LIST PRICE	SUFFIX	DESCRIPTION	LIST PRICE
-11	Acid resistant epoxy coating	$ 1591.00	T	Threaded outlet	$ 107.00
-13	All galvanized	$ 1591.00	X	Inside caulk	No Add
P	Push on outlet	No Add			

Design and dimensions are subject to modification. Prices do not include applicable taxes. Visit **www.mifab.com** for the most recent product information.
MIFAB®, Inc., 1321 West 119th Street, Chicago, Illinois 60643-5109, USA Toll Free: 1-800-465-2736 • Fax: 1-773-341-3049
All sales subject to MIFAB's® Terms & Warranties. Please refer to inside front cover. sales@mifab.com • Canada Toll Free: 1-800-387-3880

F1360 AREA DRAIN WITH 16" ROUND ADJUSTABLE HEAVY DUTY TRACTOR GRATE F1360

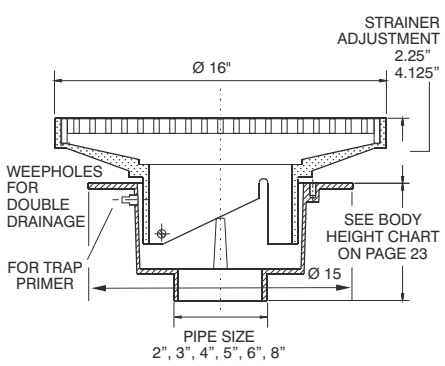

(*) DENOTES STRAINER FINISH (-1, -3 OR -4)

PARTS

A2 BODY

F1360-TA-(*)

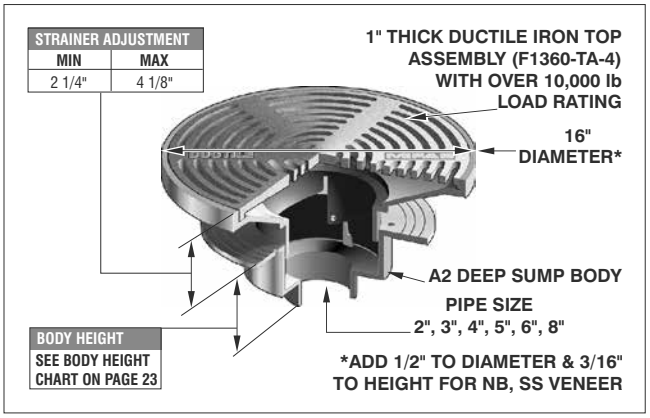

AREA DRAIN WITH 16" ROUND ADJUSTABLE HEAVY DUTY TRACTOR GRATE

MODEL NUMBER	WT. Lbs	STRAINER DESCRIPTION	LIST PRICE LACQUERED CAST IRON BODY WITH: DUCTILE IRON (-4)	NICKEL BRONZE (VENEER) (-1)	STAINLESS STEEL (VENEER) (-3)
F1362,3,4,6,8	53.00	16" Dia. Adj. tractor grate	$ 3736.00	$ 5538.00	$ 5538.00
F1362,3,4,6,8,8-Y	53.00	16" Dia. Non-Adj. tractor grate	$ 3736.00	$ 5538.00	$ 5538.00
F1362,3,4,6,8,-Y-14	53.00	16" Dia. Non-Adj. flat grate	$ 3289.00	$ 6930.00	$ 6930.00

WHEN A MEMBRANE CLAMP IS REQUIRED, ADD SUFFIX (-C), NO ADD

F1360 OPTIONAL VARIATIONS

SUFFIX	DESCRIPTION	LIST PRICE
-5	Sediment bucket (A2-MB)	$ 357.00
-6	Vandal proof secured grate (TR30 Torx & pin) (H-1072B)	$ 195.00
-7	Trap seal primer tapping	$ 196.00
-7MG	MI-GARD, Floor Drain Trap Seal	See TSP book
-8	Backwater valve (BV1250 Series)(2", 3", 4")	$ 497.00
-11	Acid resistant epoxy coating	$ 1201.00
-12	Galvanized top assembly	$ 646.00
-13	All galvanized	$ 1365.00
-15	Extension, Per 2" (A2-XY)	$ 429.00
-16	Square top	See F1460
-17	with trap and cleanout (MI-OS Series)	See MI-OS
-18	with trap and oil cone and cleanout (MI-OS Series)	See MI-OS
-20	Secondary dome strainer (FS1500-PD)	$ 192.00
-21	Secondary flat strainer (FD-9600 Series)	$ 78.00
-24	Solid secured cover	$ 631.00
-28	Stainless Steel Body (Type 304) (2", 3", 4" No Hub only)	$ 4702.00
-30	PVC Socket Connection Body* (2", 3", 4")	No Add
-31	ABS Socket Connection Body* (2", 3", 4")	No Add
-32	2", 3", 4" Integral deep seal trap (MI-950 Series)	See MI-950, pg. 289
-34	Closure plug (C1440 Series)	$ 477.00
-35	Stainless Steel mesh over bucket	$ 544.00
-40	Underdeck clamp (A2-C3)	$ 319.00
-41	Sump receiver (A2-BP)	$ 356.00
-90	Threaded side outlet (2", 3", 4") (N/A -30, -31) No Add for -NH	$ 481.00
-150	Half grate	$ 201.00
-175	Three quarter grate	$ 201.00
-C	Membrane clamp (A2-C3)	No Add
-F4-(1,3)	4" NB or SS round funnel	$ 583.00
-F4-50	4" cast iron round funnel	$ 247.00
-F6-(1,3)	6" NB or SS round funnel	$ 862.00
-F6-50	6" cast iron round funnel	$ 395.00
-G-(1,3)	4" x 9" NB or SS oval funnel	$ 1204.00
-G-50	4" x 9" C.I. oval funnel	$ 583.00
-J-(1,3)	3" x 1" NB or SS oval funnel	$ 607.00
-J-50	3" x 1" cast iron oval funnel	$ 276.00
P	Push on outlet (2", 3, 4" or 6")	No Add
T	Threaded outlet (2", 3", 4", 5" or 6")	$ 107.00
-Z	Extended wide elastomeric on top (F1550-TA)	$ 1724.00

*SPECIFY POG-6 FOR C.I. PIPE AND POG-6-PVC FOR PVC PIPE. 2", 3", 4" SIZES USE SAME GASKET. * ADD -NH TO -90 FOR NO HUB OUTLET - NO ADD .

F1370 AREA DRAIN WITH 16" ROUND ADJ. HEAVY DUTY TRACTOR GRATE & EXTRA DEEP SUMP F1370

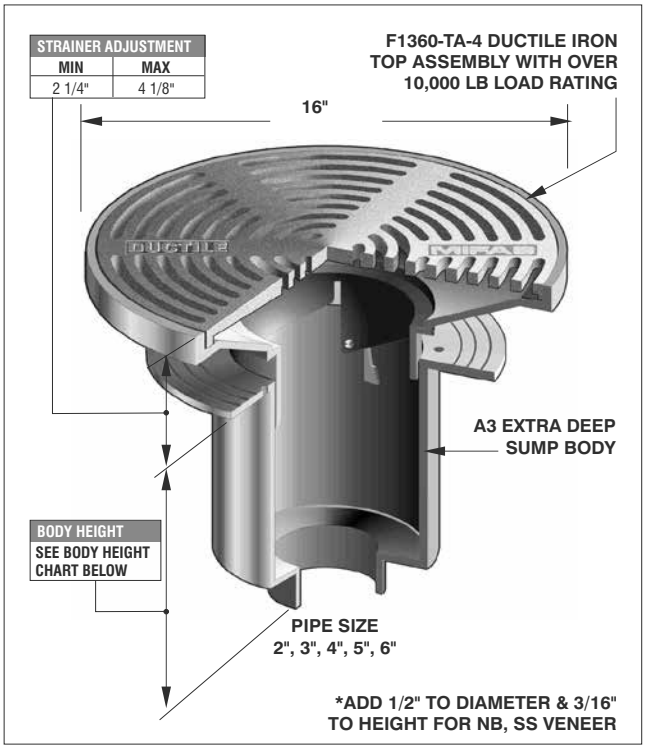

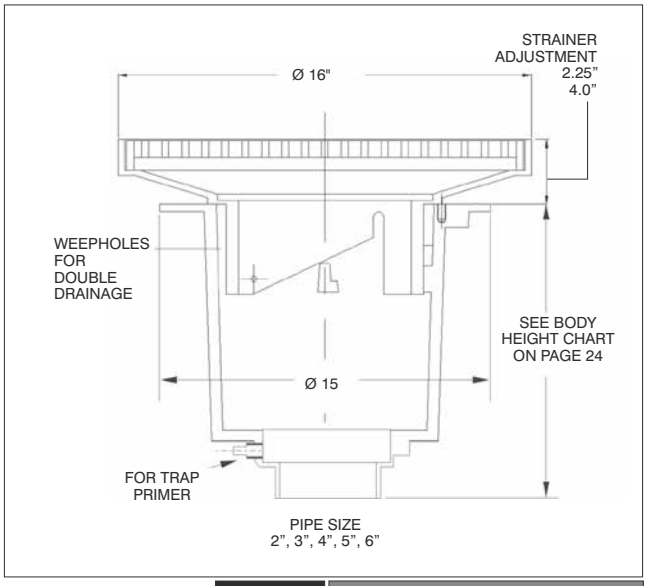

PARTS	A3 BODY	F1360-TA-(*)

(*) DENOTES STRAINER FINISH (-1, -3 OR -4)

AREA DRAIN WITH 16" ROUND ADJUSTABLE HEAVY DUTY TRACTOR GRATE & EXTRA DEEP SUMP

MODEL NUMBER	WT. Lbs	STRAINER DESCRIPTION	LIST PRICE LACQUERED CAST IRON BODY WITH: DUCTILE IRON (-4)	NICKEL BRONZE (VENEER) (-1)	STAINLESS STEEL (VENEER) (-3)
F1372,3,4,6	64.00	16" Dia. Adj. tractor grate	$ 4071.00	$ 7615.00	$ 7615.00
F1372,3,4,6-Y	64.00	16" Dia. Non-Adj. tractor grate	$ 4071.00	$ 7615.00	$ 7615.00
F1372,3,4,6-Y-14	64.00	16" Dia. Non-Adj. flat grate	$ 4071.00	$ 7615.00	$ 7615.00

WHEN A MEMBRANE CLAMP IS REQUIRED, ADD SUFFIX (-C), NO ADD.

F1370 OPTIONAL VARIATIONS:

SUFFIX	DESCRIPTION	LIST PRICE	SUFFIX	DESCRIPTION	LIST PRICE
-5	Sediment bucket (A2-MB)	$ 411.00	-35	SS mesh over bucket	$ 544.00
-6	Vandal proof secured grate (TR30 Torx and pin) (H-1072B)	$ 269.00	-40	Underdeck clamp (A2-C3)	$ 319.00
-7	Trap seal primer tapping	$ 214.00	-41	Sump receiver (A2-BP)	$ 356.00
-8	Backwater valve (BV1250 Series)(2", 3",4")	$ 497.00	-90	Threaded side outlet (N/A -30, -31) No Add for -NH	$ 481.00
-11	All acid resistant epoxy coated	$ 2576.00	-150	Half grate	$ 201.00
-12	Galvanized top assembly	$ 860.00	-175	Three quarter grate	$ 201.00
-13	All galvanized	$ 2576.00	-C	Membrane clamp (A2-C3)	No Add
-15	Extension (per 2") (A2-XY)	$ 429.00	-F4-(1,3)	4" NB or SS round funnel	$ 583.00
-16	Square Top	See F1470	-F4-50	4" cast iron round funnel	$ 247.00
-17	with trap and cleanout (see MI-OS Series)	See MI-OS	-F6-(1,3)	6" NB or SS round funnel	$ 862.00
-18	with trap and oil cone and cleanout (see MI-OS Series)	See MI-OS	-F6-50	6" cast iron round funnel	$ 395.00
-20	Secondary dome strainer (FS1500-PD)	$ 192.00	-G-(1,3)	4" x 9" NB or SS oval funnel	$ 1204.00
-21	Secondary flat strainer (FD-9600 Series)	$ 78.00	-G-50	4" x 9" Cast iron oval funnel	$ 583.00
-28	Stainless Steel Body (Type 304) (2". 2", 4" No Hub only)	$ 9403.00	-J-(1,3)	3" x 1" NB or SS oval funnel	$ 607.00
-30	PVC Socket Connection Body* (2", 3" or 4")	No Add	-J-50	3" x 1" cast iron oval funnel	$ 276.00
-31	ABS Socket Connection Body* (2", 3" or 4")	No Add	P	Push on outlet (2", 3" or 4")	No Add
-32	2", 3", 4" Integral deep seal trap (MI-950 Series)	See MI-950, pg 289	T	Threaded outlet (2", 3" or 4")	$ 107.00
-34	Closure plug (C1440 Series)	$ 477.00	X	Inside caulk outlet (2", 3" or 4")	No Add
			-Z	Extended wide elastomeric flange on top (F1550-TA)	$ 1724.00

*PVC/ABS SOCKET BODIES AVAILABLE FOR 2", 3" OR 4" CONNECTION SIZES

* ADD -NH TO -90 FOR NO HUB OUTLET - NO ADD.

THE A3 BODY

BODY HEIGHT A3 BODY BASED DRAINS

PIPE SIZE	NO HUB STANDARD	PUSH ON (P)	THREADED (T)	INSIDE CAULK (X)	PVC/ABS (-30/-31)
2"	12 1/4"	12 1/2"	11 1/2"	13"	11 3/4"
3"	12 1/4"	12 5/8"	11 7/8"	13"	12 1/2"
4"	12 3/8"	12 5/8"	11 7/8"	13"	12 5/8"
5"	12 3/8"	-	11 7/8"	16"	-
6"	12 5/8"	16"	-	-	-

THE A3 BODY IS MANUFACTURED AS A TRANSITION BODY AND REQUIRES AN A1 BODY ASSEMBLED TO IT TO FORM THE OUTLET CONNECTION.

Design and dimensions are subject to modification. Prices do not include applicable taxes. Visit **www.mifab.com** for the most recent product information.

MIFAB®, Inc., 1321 West 119th Street, Chicago, Illinois 60643-5109, USA
Toll Free: 1-800-465-2736 • Fax: 1-773-341-3049
sales@mifab.com • Canada Toll Free: 1-800-387-3880

All sales subject to MIFAB's® Terms & Warranties. Please refer to inside front cover.

F1420-C AREA DRAIN WITH 8" SQUARE ADJUSTABLE HEAVY DUTY TRACTOR GRATE F1420-C

Note: Flow through shank of top assembly is equal to 4" pipe.

(*) Denotes strainer finish (-1, -3, or -4)

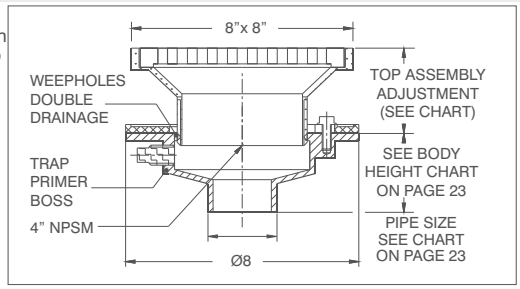

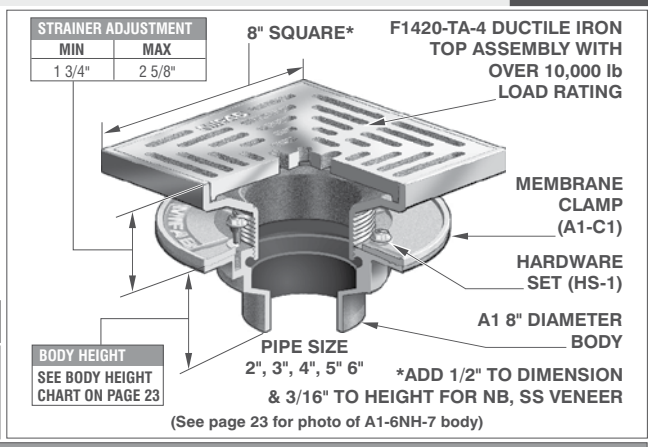

(See page 23 for photo of A1-6NH-7 body)

PARTS

A1 BODY	F1420-TA-(*)	A1-C1	HS-1

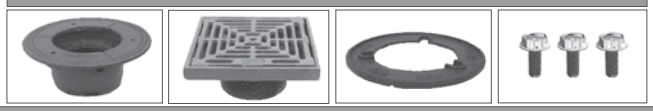

F1420-C AREA DRAIN WITH 8" SQUARE ADJUSTABLE HEAVY DUTY TRACTOR GRATE

MODEL NUMBER	WT. Lbs	STRAINER DESCRIPTION	LIST PRICE LACQUERED CAST IRON BODY WITH: DUCTILE IRON (-4)	NICKEL BRONZE (VENEER) (-1)	STAINLESS STEEL (VENEER) (-3)
F1422,3,4,6-C	17.00	8" x 8" Adj. tractor grate	$ 1503.00	$ 2259.00	$ 2259.00
F1422,3,4,6-C-Y-14	17.00	8" x 8" Non-Adj. flat grate	$ 1136.00	$ 1974.00	$ 1974.00
F1422,3,4,6-C-Y	17.00	8" x 8" Non-Adj. tractor grate	$ 1503.00	$ 2259.00	$ 2259.00

WHEN NO MEMBRANE CLAMP IS REQUIRED, DELETE SUFFIX (-C) & DEDUCT **$103.00**

F1420-C & F1430C OPTIONAL VARIATIONS:

SUFFIX	DESCRIPTION	F1420-C	F1430C	SUFFIX	DESCRIPTION	F1420-C	F1430C
-5	Sediment bucket (A1-MB)	$ 185.00	$ 185.00	-90	Threaded side outlet (2", 3") (N/A -30, -31) No Add for -NH	$ 287.00	$ 481.00
-6	Vandal proof secured grate (TR30 Torx and pin H-1072)	$ 195.00	$ 195.00	-90	Threaded side outlet (4") (N/A -30, -31) No Add for -NH	$ 535.00	$ 481.00
-7	Trap seal primer tapping	Standard	$ 196.00	-150	Half grate	$ 201.00	$ 201.00
-7MG	MI-GARD, Floor Drain Trap Seal	See TSP book		-175	Three quarter grate	$ 201.00	$ 201.00
-8	Backwater valve (BV1250 Series) (2", 3", 4")	$ 497.00	$ 497.00	-F4-(1,3)	4" NB or SS round funnel	$ 583.00	$ 583.00
-11	All acid resistant epoxy coated	$ 654.00	$ 956.00	-F4-50	4" cast iron round funnel	$ 247.00	$ 247.00
-12	Galvanized top assembly	$ 335.00	$ 375.00	-F6-(1,3)	6" NB or SS round funnel	$ 862.00	$ 862.00
-13	All galvanized	$ 565.00	$ 654.00	-F6-50	6" cast iron round funnel	$ 395.00	$ 395.00
-15	Extension (DD-50)	$ 185.00	$ 185.00	-G-(1,3)	4" x 9" NB or SS oval funnel	$ 1204.00	$ 1204.00
-21	Secondary flat strainer (FD-9600 Series)	$ 78.00	$ 78.00	-G-50	4" x 9" Cast iron oval funnel	$ 583.00	$ 583.00
-28	Stainless Steel body (Type 304) (2", 3", 4" No Hub only)	$ 1581.00	$ 4702.00	-J-(1,3)	3" x 1" NB or SS oval funnel	$ 607.00	$ 607.00
-30	PVC Socket Connection Body (2", 3", 4")	No Add	No Add	-J-50	3" x 1" cast iron oval funnel	$ 276.00	$ 276.00
-31	ABS Socket Connection Body (2", 3", 4")	No Add	No Add	P	Push on outlet (2", 3" or 4")	No Add	No Add
-32	2", 3", 4" Integral deep seal trap (MI-950 Series)	See MI-950, pg 289		T	Threaded outlet (2", 3" or 4")	$ 107.00	$ 107.00
-34	Closure plug (C1440 Series)	$ 477.00	$ 477.00	X	Inside caulk outlet (2", 3" or 4")	No Add	No Add
-40	Underdeck clamp (A1-C3)	$ 196.00	$ 319.00	-Z	Extended wide elastomeric flange on body (20" x 20" x 1/4" dia.)	$ 1724.00	$ 1724.00
-41	Sump receiver (A1-BP)	$ 337.00	$ 356.00				

*PVC/ABS SOCKET BODIES AVAILABLE FOR 2", 3" OR 4" CONNECTION SIZES

*SPECIFY POG-6 FOR C.I. PIPE AND POG-6-PVC FOR PVC PIPE. 2", 3", 4" SIZES USE SAME GASKET.
*ADD -NH TO -90 FOR NO HUB OUTLET - NO ADD .

F1430C AREA DRAIN 8" SQUARE ADJUSTABLE HEAVY DUTY TRACTOR GRATE AND DEEP SUMP F1430C

Note : Flow through shank of top assembly is equal to 4" pipe.

(*) Denotes strainer finish (-1, -3, or -4)

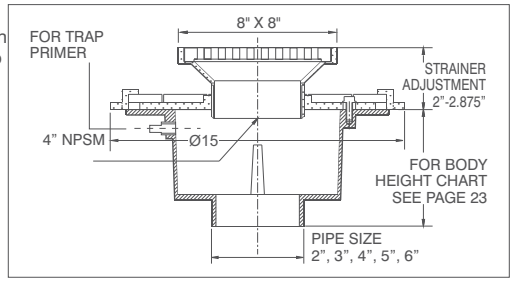

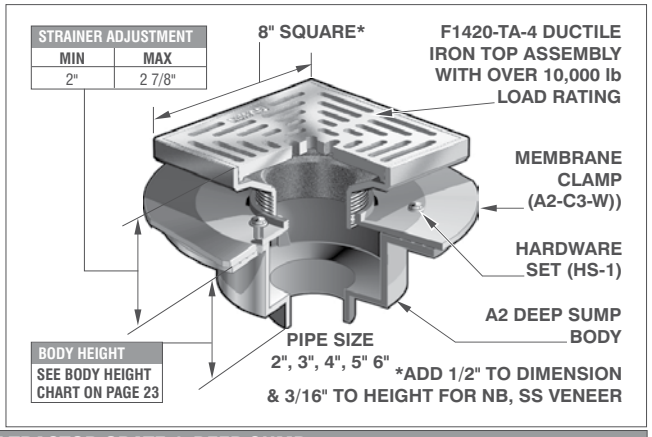

PARTS

A2 BODY	F1420-TA-(*)	A2-C3-W	HS-1

F1430C AREA DRAIN WITH 8"x 8" SQUARE ADJUSTABLE HEAVY DUTY TRACTOR GRATE & DEEP SUMP

MODEL NUMBER	WT. Lbs	STRAINER DESCRIPTION	LIST PRICE LACQUERED CAST IRON BODY WITH: DUCTILE IRON (-4)	NICKEL BRONZE (VENEER) (-1)	STAINLESS STEEL (VENEER) (-3)
F1432,3,4,-C	28.00	8" x 8" Adj. tractor grate	$ 2454.00	$ 3735.00	$ 3735.00
F1432,3,4,-C-Y	28.00	8" x 8" Non-Adj. tractor grate	$ 1136.00	$ 1988.00	$ 1988.00

F1440 AREA DRAIN WITH 12 3/4" x 12 3/4" ADJ. HEAVY DUTY HINGED TRACTOR GRATE F1440

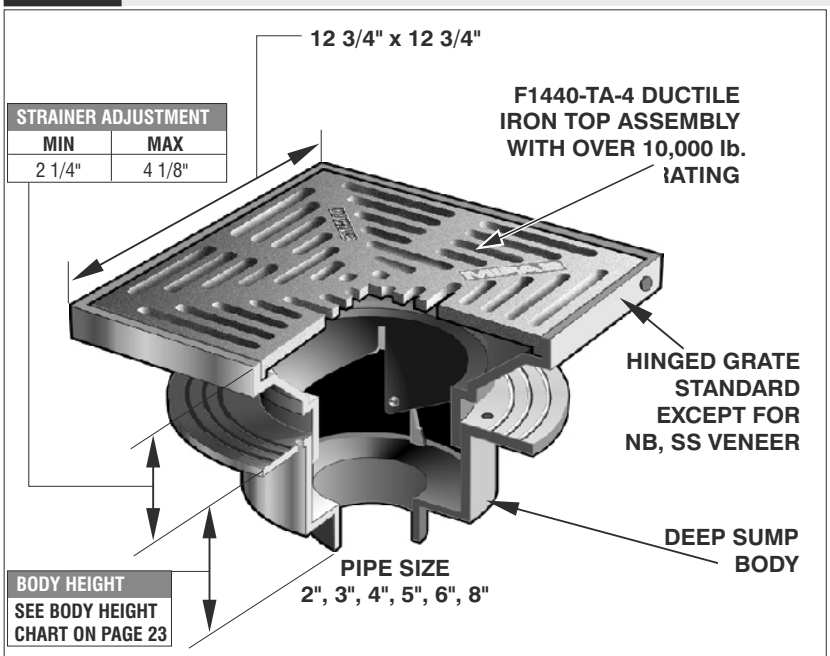

STRAINER ADJUSTMENT	
MIN	MAX
2 1/4"	4 1/8"

BODY HEIGHT
SEE BODY HEIGHT CHART ON PAGE 23

*ADD 5/8" TO DIMENSION & 3/16" TO HEIGHT FOR NB, SS VENEER

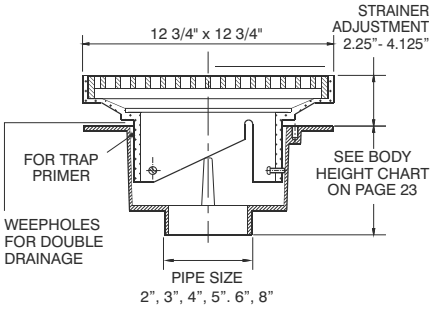

ANSI/ASME RATING		
STRAINER	FREE AREA	LOAD RATING
F1440-TA-1	40 IN²	OVER 10,000 lbs
F1440-TA-3	40 IN²	OVER 10,000 lbs
F1440-TA-4	40 IN²	OVER 10,000 lbs

(*) Denotes strainer finish (-1, -3, or -4)

PARTS	
A2 BODY	F1440-TA-(*)

AREA DRAIN WITH 12" SQUARE ADJUSTABLE HEAVY DUTY HINGED TRACTOR GRATE					
MODEL NUMBER	WT. Lbs	STRAINER DESCRIPTION	LIST PRICE LACQUERED CAST IRON BODY WITH: DUCTILE IRON (-4)	NICKEL BRONZE (VENEER) (-1)	STAINLESS STEEL (VENEER) (-3)
F1442,3,4,6	52.75	12" x 12" Adj. tractor grate	$ 3022.00	$ 4123.00	$ 4123.00
F1442,3,4,6-Y	52.75	12" x 12" Non-Adj. tractor grate	$ 1581.00	$ 3004.00	$ 3004.00
F1442,3,4,6-Y-14	52.75	12" x 12" Non-Adj. flat grate with shallow body	$ 1597.00	$ 2558.00	$ 2558.00

WHEN A MEMBRANE CLAMP IS REQUIRED, ADD SUFFIX (-C), NO ADD.

F1440 OPTIONAL VARIATIONS:					
SUFFIX	DESCRIPTION		SUFFIX	DESCRIPTION	LIST PRICE
-5	Sediment bucket (A2-MB)	$ 357.00	-41	Sump receiver (A2-BP)	$ 356.00
-6	Vandal proof secured grate (TR30 Torx and Pin) (H-1072)	$ 195.00	-90	Threaded side outlet (2", 3", 4") (N/A -30, -31) No Add for -NH	$ 481.00
-7	Trap seal primer tapping	$ 196.00	-150	Half grate	$ 201.00
-7MG	MI-GARD, Floor Drain Trap Seal	See TSP book	-175	Three quarter grate	$ 201.00
-8	Backwater valve (BV1250 Series) (2", 3", 4")	$ 497.00	-C	Membrane clamp (A2-C3)	No Add
-11	All acid resistant epoxy coated	$ 1195.00	-F4-(1,3)	4" NB or SS round funnel	$ 583.00
-12	Galvanized top assembly	$ 585.00	-F4-50	4" cast iron round funnel	$ 247.00
-13	All galvanized	$ 1158.00	-F6-(1,3)	6" NB or SS round funnel	$ 862.00
-15	Extension (per 2") (A2-XY)	$ 429.00	-F6-50	6" cast iron round funnel	$ 395.00
-20	Secondary dome strainer (FS1500-PD)	$ 192.00	-G-(1,3)	4" x 9" NB or SS oval funnel	$1204.00
-21	Secondary flat strainer (FD-9600 Series)	$ 78.00	-G-50	4" x 9" cast iron oval funnel	$ 583.00
-24	Solid secured cover	$ 759.00	-J-(1,3)	3" x 1" NB or SS oval funnel	$ 607.00
-28	Stainless steel body (Type 304) (2", 3", 4" No Hub only)	$ 4702.00	-J-50	3" x 1" cast iron oval funnel	$ 276.00
-30	PVC Socket Connection Body* (2", 3", 4")	No Add	P	Push on outlet (2", 3", 4" or 6")	No Add
-31	ABS Socket Connection Body* (2", 3", 4")	No Add	T	Threaded outlet (2", 3", 4", 5" or 6")	$ 107.00
-32	2", 3", or 4" integral deep seal trap (MI-950 Series)	See MI-950, pg 289	X	Inside caulk outlet (2", 3", 4", 5" or 6")	No Add
-34	Closure plug (C1440 Series)	$ 477.00	-Z	Extended wide elastomeric flange on body (20" x 20" x 1/4" thick)	$1724.00
-35	Stainless steel mesh over bucket	$ 544.00	8	8" No hub outlet	$ 395.00
-40	Underdeck clamp (A2-C3)	$ 319.00			

*PVC/ABS SOCKET BODIES AVAILABLE FOR 2", 3" OR 4" CONNECTION SIZES * SPECIFY POG-6 FOR C.I. PIPE AND POG-6-PVC FOR PVC PIPE. 2", 3", 4" SIZES USE SAME GASKET.

Design and dimensions are subject to modification. Prices do not include applicable taxes. Visit **www.mifab.com** for the most recent product information.

MIFAB®, Inc., 1321 West 119th Street, Chicago, Illinois 60643-5109, USA
Toll Free: 1-800-465-2736 • Fax: 1-773-341-3049
sales@mifab.com • Canada Toll Free: 1-800-387-3880

All sales subject to MIFAB's® Terms & Warranties. Please refer to inside front cover.

F1440-Y-Q SHALLOW BODY AREA DRAIN WITH 12 3/4" SQUARE, NON ADJUSTABLE HEAVY DUTY TRACTOR GRATE F1440-Y-Q

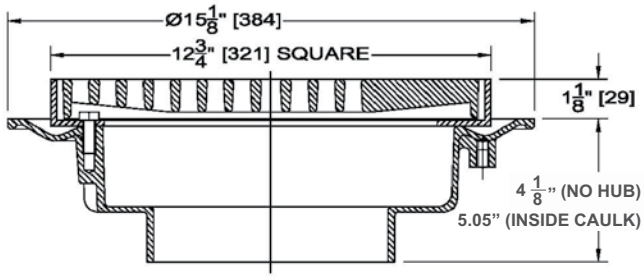

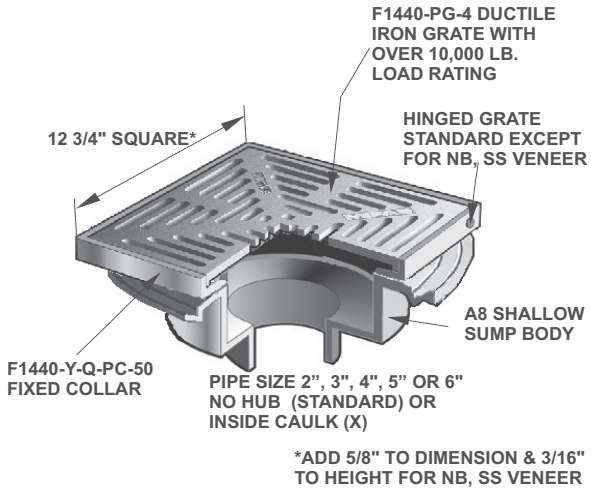

ANSI / ASME RATING		
STRAINER	FREE AREA	LOAD RATING
F1440-Y-Q-TA-1	40.0 IN²	OVER 10,000 lbs.
F1440-Y-Q-TA-3	40.0 IN²	OVER 10,000 lbs.
F1440-Y-Q-TA-4	40.0 IN²	OVER 10,000 lbs.

PARTS

H-1136	F1440-Y-Q-PC-50	A8 BODY	F1440-PG-(*)
	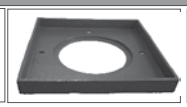		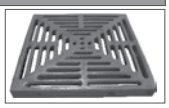

(*) Denotes Strainer Finish (-1,-3 or -4)

F1440-Y-Q SHALLOW BODY AREA DRAIN WITH 12" SQUARE, NON ADJUSTABLE HEAVY DUTY TRACTOR GRATE					
MODEL NUMBER	WT. Lbs	STRAINER DESCRIPTION	LIST PRICE LACQUERED CAST IRON SHALLOW BODY WITH: DUCTILE IRON (-4)	NICKEL BRONZE (VENEER)(-1)	STAINLESS STEEL (VENEER)(-3)
F1442,3,4,6-Y-Q-14	45.00	12" Sq. Non-Adj. flat grate	$ 1664.00	$ 2793.00	$ 2793.00
F1442,3,4,6-Y-Q	45.00	12" Sq. Non-Adj. tractor grate	$ 1664.00	$ 2793.00	$ 2793.00

When a membrane clamp is required add Suffix (-C), No Add

F1440-Y-Q OPTIONAL VARIATIONS:		
SUFFIX	DESCRIPTION	LIST PRICE
-5	Sediment bucket (A2-MBL)	$ 269.00
-6	Vandal proof secured grate (TR30 Torx and Pin) (H-1072)	$ 195.00
-7	Trap seal primer tapping	$ 196.00
-7MG	MI-GARD, Floor Drain Trap Seal	See TSP book
-8	Backwater valve (BV1250 Series) (2", 3", 4", 5" or 6")	$ 497.00
-11	All acid resistant epoxy coated	$ 1108.00
-12	Galvanized top assembly	$ 585.00
-13	All galvanized	$ 737.00
-15	Extension (per 2") (A8-V2)	$ 429.00
-21	Secondary flat strainer (FD-9600 Series)	$ 78.00
-24	Solid secured cover	$ 631.00
-28	Stainless steel body (Type 304) ((2", 3", 4", 5" or 6" No Hub only)	$ 4702.00
-32	2", 3", or 4" integral deep seal trap (MI-950 Series)	See MI-950, pg. 289
-34	Closure plug (C1440 Series)	$ 477.00
-35	Stainless steel mesh over bucket	$ 544.00
-40	Underdeck clamp (A8-UDC - Two half clamps and HS-14 hardware)	$ 319.00
-41	Sump receiver	$ 356.00
-150	Half grate	$ 201.00
-175	Three quarter grate	$ 201.00
-F4-(1,3)	4" NB or SS round funnel	$ 583.00
-F4-50	4" cast iron round funnel	$ 247.00
-F6-(1,3)	6" NB or SS round funnel	$ 862.00
-F6-50	6" cast iron round funnel	$ 395.00
-G-(1,3)	4" x 9" NB or SS oval funnel	$ 1204.00
-G-50	4" x 9" cast iron oval funnel	$ 583.00
-J-(1,3)	3" x 1" NB or SS oval funnel	$ 607.00
-J-50	3" x 1" cast iron oval funnel	$ 276.00
X	Inside caulk outlet (3", 4", 5" or 6")	No Add
-Z	Extended wide elastomeric flange on top (F1540-TA)	$ 1724.00

F1450 AREA DRAIN WITH 12"SQ. ADJ. HEAVY DUTY HINGED TRACTOR GRATE & EXTRA DEEP SUMP F1450

STRAINER ADJUSTMENT	
MIN	MAX
2 1/4"	4 1/8"

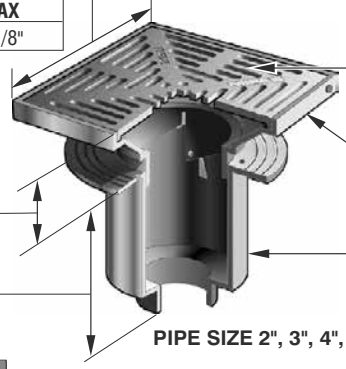

BODY HEIGHT
SEE BODY HEIGHT CHART ON PAGE 24

*ADD 5/8" TO DIMENSION & 3/16" TO HEIGHT FOR NB, SS VENEER

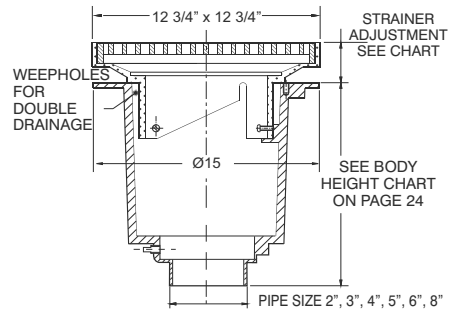

(*) Denotes strainer finish (-1, -3, or -4)

PARTS	A3 BODY	F1440-TA-(*)

AREA DRAIN WITH 12" SQUARE ADJUSTABLE HEAVY DUTY HINGED TRACTOR GRATE & EXTRA DEEP SUMP

MODEL NUMBER	WT. Lbs	STRAINER DESCRIPTION	LIST PRICE LACQUERED CAST IRON BODY WITH: DUCTILE IRON (-4)	NICKEL BRONZE (VENEER) (-1)	STAINLESS STEEL (VENEER) (-3)
F1452,3,4,6	61.00	12" x 12" Adj. tractor grate	$ 2544.00	$ 3804.00	$ 3804.00
F1452,3,4,6-14	61.00	12" x 12" Adj. flat grate	$ 2544.00	$ 3804.00	$ 3804.00
F1452,3,4,6-Y	61.00	12" x 12" Non-Adj. tractor grate	$ 2544.00	$ 3804.00	$ 3804.00
F1452,3,4,6-Y-14	61.00	12" x 12" Non-Adj. flat grate	$ 2544.00	$ 3804.00	$ 3804.00

WHEN A MEMBRANE CLAMP IS REQUIRED, ADD SUFFIX (-C), NO ADD.

F1450 OPTIONAL VARIATIONS:

SUFFIX	DESCRIPTION	LIST PRICE
-5	Sediment bucket (A2-MB)	$ 357.00
-6	Vandal proof secured grate (TR30 Torx and Pin) (H-1072)	$ 195.00
-7	Trap seal primer tapping	$ 196.00
-7MG	MI-GARD, Floor Drain Trap Seal	See TSP book
-8	Backwater valve (BV1250 Series) (2", 3", 4")	$ 497.00
-11	All acid resistant epoxy coated	$ 2576.00
-12	Galvanized top assembly	$ 585.00
-13	All galvanized	$ 2576.00
-15	Extension (per 2") (A2-XY)	$ 429.00
-20	Secondary dome strainer (FS-1500-PD)	$ 192.00
-21	Secondary flat strainer (FD-9600 Series)	$ 78.00
-24	Solid secured cover	$ 822.00
-28	Stainless steel body (Type 304) (2", 3", 4" No Hub only)	$ 9403.00
-30	PVC Socket Connection Body* (2", 3", 4")	No Add
-31	ABS Socket Connection Body* (2", 3", 4")	No Add
-32	2", 3", or 4" integral deep seal trap (MI-950 Series)	See MI-950, pg. 289
-34	Closure plug (C1440 Series)	$ 477.00
-35	Stainless steel mesh over bucket	$ 544.00
-40	Underdeck clamp (A2-C3)	$ 319.00
-41	Sump receiver (A2-BP)	$ 356.00
-90	Threaded side outlet (2", 3", 4") (N/A -30, -31) No Add for -NH	$ 481.00
-150	Half grate	$ 201.00
-175	Three quarter grate	$ 201.00
-C	Membrane clamp (A2-C3)	No Add
-F4-(1,3)	4" NB or SS round funnel	$ 583.00
-F4-50	4" cast iron round funnel	$ 247.00
-F6-(1,3)	6" NB or SS round funnel	$ 862.00
-F6-50	6" cast iron round funnel	$ 395.00
-G-(1,3)	4" x 9" NB or SS oval funnel	$ 1204.00
-G-50	4" x 9" cast iron oval funnel	$ 583.00
-J-(1,3)	3" x 1" NB or SS oval funnel	$ 607.00
-J-50	3" x 1" cast iron oval funnel	$ 276.00
P	Push on outlet (2", 3" or 4")	No Add
T	Threaded outlet (2", 3" or 4")	$ 107.00
X	Inside caulk outlet (2", 3" or 4")	No Add
-Z	Extended wide elastomeric flange on body (20" x 20" x 1/4" thick)	$ 1724.00
8	8" no hub outlet	$ 395.00

Design and dimensions are subject to modification. Prices do not include applicable taxes. Visit **www.mifab.com** for the most recent product information.
MIFAB®, Inc., 1321 West 119th Street, Chicago, Illinois 60643-5109, USA Toll Free: 1-800-465-2736 • Fax: 1-773-341-3049
All sales subject to MIFAB's® Terms & Warranties. Please refer to inside front cover. sales@mifab.com • Canada Toll Free: 1-800-387-3880

F1460 AREA DRAIN WITH 15 3/4" SQUARE ADJUSTABLE HEAVY DUTY TRACTOR GRATE F1460

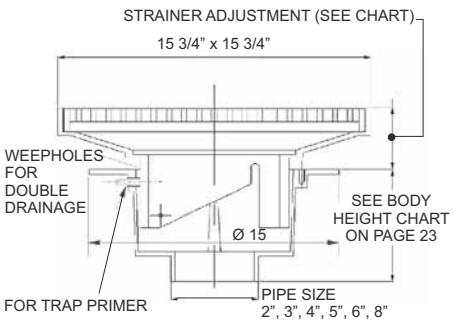

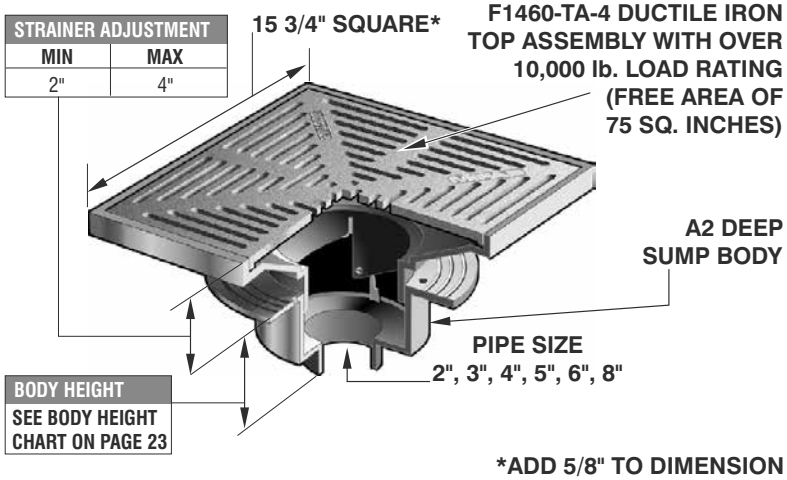

ANSI/ASME RATING		
STRAINER	FREE AREA	LOAD RATING
F1460-TA-1	75 IN²	OVER 10,000 lbs
T1460-TA-3	75 IN²	OVER 10,000 lbs
F1460-TA-4	75 IN²	OVER 10,000 lbs

PARTS

A2 BODY

F1460-TA-(*)

(*) DENOTES STRAINER FINISH (-1, -3 OR -4)

AREA DRAIN WITH 15 3/4" SQUARE ADJUSTABLE HEAVY DUTY TRACTOR GRATE					
MODEL NUMBER	WT. Lbs	STRAINER DESCRIPTION	LIST PRICE LACQUERED CAST IRON BODY WITH: DUCTILE IRON (-4)	NICKEL BRONZE (VENEER) (-1)	STAINLESS STEEL (VENEER) (-3)
F1462,3,4,6	69.00	15 3/4" x 15 3/4" Adj. tractor grate	$ 3115.00	$ 5474.00	$ 5474.00
F1462,3,4,6-Y	69.00	15 3/4" x 15 3/4" Non-Adj. flat grate	$ 3115.00	$ 5474.00	$ 5474.00

WHEN A MEMBRANE CLAMP IS REQUIRED, ADD SUFFIX (-C) NO ADD

F1460 OPTIONAL VARIATIONS:

SUFFIX	DESCRIPTION	LIST PRICE	SUFFIX	DESCRIPTION	LIST PRICE
-5	Sediment bucket (A2-MB)	$ 357.00	-41	Sump receiver (A2-BP)	$ 356.00
-6	Vandal proof secured grate (TR30 Torx and Pin) (H-1072B)	$ 195.00	-90	Threaded side outlet (2", 3", 4") (N/A -30, -31) No Add for -NH	$ 481.00
-7	Trap seal primer tapping	$ 196.00	-150	Half grate	$ 201.00
-7MG	MI-GARD, Floor Drain Trap Seal	See TSP book	-175	Three quarter grate	$ 201.00
-8	Backwater valve (BV1250 Series) (2", 3", 4")	$ 497.00	-C	Membrane clamp (A2-C3)	No Add
-11	All acid resistant epoxy coated	$ 1810.00	-F4-(1,3)	4" NB or SS round funnel	$ 583.00
-12	Galvanized top assembly	$ 920.00	-F4-50	4" cast iron round funnel	$ 247.00
-13	All galvanized	$ 1796.00	-F6-(1,3)	6" NB or SS round funnel	$ 862.00
-15	Extension (per 2") (A2-XY)	$ 429.00	-F6-50	6" cast iron round funnel	$ 395.00
-20	Secondary dome strainer (FS1500-PD)	$ 192.00	-G-(1,3)	4" x 9" NB or SS oval funnel	$ 1204.00
-21	Secondary flat strainer (FD-9600 Series)	$ 78.00	-G-50	4" x 9" cast iron oval funnel	$ 583.00
-24	Solid secured cover	$ 822.00	-J-(1,3)	3" x 1" NB or SS oval funnel	$ 607.00
-28	Stainless steel body (Type 304) (2", 3", 4" No Hub only)	$ 470.00	-J-50	3" x 1" cast iron oval funnel	$ 276.00
-30	PVC Socket Connection Body* (2", 3", 4")	No Add	P	Push on outlet (2", 3", 4" or 6")	No Add
-31	ABS Socket Connection Body* (2", 3", 4")	No Add	T	Threaded outlet (2", 3", 4", 5" or 6")	$ 107.00
-32	2", 3", or 4" integral deep seal trap (MI-950 Series)	See MI-950, pg. 289	X	Inside caulk outlet (2", 3", 4", 5" or 6")	No Add
-34	Closure plug (C1440 Series)	$ 477.00	-Z	Extended wide elastomeric flange on body (20" x 20" x 1/4" thick)	$ 1724.00
-35	Stainless steel mesh over bucket	$ 544.00	8	8" No hub outlet	$ 395.00
-40	Underdeck clamp (A2-C3)	$ 319.00			

*PVC/ABS SOCKET BODIES AVAILABLE FOR 2", 3" OR 4" CONNECTION SIZES
* SPECIFY POG-6 FOR C.I. PIPE AND POG-6-PVC FOR PVC PIPE. 2", 3", 4" SIZES USE SAME GASKET.

F1470 AREA DRAIN WITH 15 3/4" SQ. ADJ. HEAVY DUTY TRACTOR GRATE & EXTRA DEEP SUMP F1470

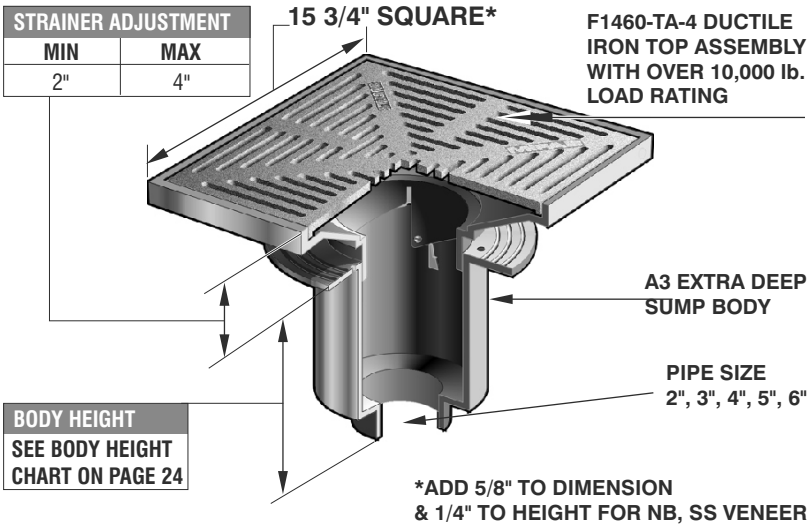

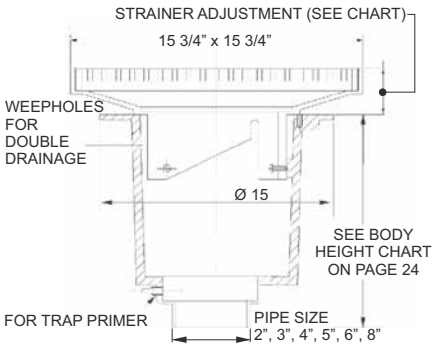

ANSI/ASME RATING		
STRAINER	FREE AREA	LOAD RATING
F1460-TA-1	75 IN²	OVER 10,000 lbs
T1460-TA-3	75 IN²	OVER 10,000 lbs
F1460-TA-4	75 IN²	OVER 10,000 lbs

PARTS

A3 BODY

F1460-TA-(*)

(*) Denotes strainer finish (-1, -3 or -4)

AREA DRAIN WITH 15 3/4" SQUARE ADJUSTABLE HEAVY DUTY TRACTOR GRATE & EXTRA DEEP SUMP					
MODEL NUMBER	WT. Lbs	STRAINER DESCRIPTION	LIST PRICE LACQUERED CAST IRON BODY WITH: DUCTILE IRON (-4)	NICKEL BRONZE (VENEER) (-1)	STAINLESS STEEL (VENEER) (-3)
F1472,3,4,6	75.00	15 3/4" x 15 3/4" Adj. tractor grate	$ 4595.00	$ 6957.00	$ 6957.00
F1472,3,4,6-Y	75.00	15 3/4" x 15 3/4" Non-Adj. tractor grate	$ 4595.00	$ 6957.00	$ 6957.00
F1472,3,4,6-Y-14	75.00	15 3/4" x 15 3/4" Non-Adj. flat grate	$ 4595.00	$ 6957.00	$ 6957.00

WHEN A MEMBRANE CLAMP IS REQUIRED, ADD SUFFIX (-C), NO ADD

F1470 OPTIONAL VARIATIONS:

SUFFIX	DESCRIPTION	LIST PRICE	SUFFIX	DESCRIPTION	LIST PRICE
-5	Sediment bucket (A2-MB)	$ 357.00	-41	Sump receiver (A2-BP)	$ 356.00
-6	Vandal proof secured grate (TR30 Torx and Pin) (H-1072B)	$ 195.00	-90	Threaded side outlet (2", 3", 4") (N/A -30, -31) No Add for -NH	$ 481.00
-7	Trap seal primer tapping	$ 196.00	-150	Half grate	$ 201.00
-7MG	MI-GARD, Floor Drain Trap Seal	See TSP book	-175	Three quarter grate	$ 201.00
-8	Backwater valve (BV1250 Series) (2", 3", 4")	$ 497.00	-C	Membrane clamp (A2-C3)	No Add
-11	All acid resistant epoxy coated	$ 2576.00	-F4-(1,3)	4" NB or SS round funnel	$ 583.00
-12	Galvanized top assembly	$ 920.00	-F4-50	4" cast iron round funnel	$ 247.00
-13	All galvanized	$ 2576.00	-F6-(1,3)	6" NB or SS round funnel	$ 862.00
-15	Extension (per 2") (A2-XY)	$ 429.00	-F6-50	6" cast iron round funnel	$ 395.00
-20	Secondary dome strainer (FS1500-PD)	$ 192.00	-G-(1,3)	4" x 9" NB or SS oval funnel	$ 1204.00
-21	Secondary flat strainer (FD-9600 Series)	$ 78.00	-G-50	4" x 9" cast iron oval funnel	$ 583.00
-24	Solid secured cover	$ 822.00	-J-(1,3)	3" x 1" NB or SS oval funnel	$ 607.00
-28	Stainless steel body (Type 304) (2", 3", 4" No Hub only)	$ 9403.00	-J-50	3" x 1" cast iron oval funnel	$ 276.00
-30	PVC Socket Connection Body* (2", 3", 4")	No Add	P	Push on outlet (2", 3", 4" or 6")	No Add
-31	ABS Socket Connection Body* (2", 3", 4")	No Add	T	Threaded outlet (2", 3", 4", 5" or 6")	$ 107.00
-32	2", 3", or 4" integral deep seal trap (MI-950 Series)	See MI-950, pg. 289	X	Inside caulk outlet (2", 3", 4", 5" or 6")	No Add
-34	Closure plug (C1440 Series)	$ 477.00	-Z	Extended wide elastomeric flange on body (20" x 20" x 1/4" thick)	$ 1724.00
-35	Stainless steel mesh over bucket	$ 544.00	8	8" No hub outlet	$ 395.00
-40	Underdeck clamp (A2-C3)	$ 319.00			

*PVC/ABS SOCKET BODIES AVAILABLE FOR 2", 3" OR 4" CONNECTION SIZES
* SPECIFY POG-6 FOR C.I. PIPE AND POG-6-PVC FOR PVC PIPE. 2", 3", 4" SIZES USE SAME GASKET.

Design and dimensions are subject to modification. Prices do not include applicable taxes. Visit **www.mifab.com** for the most recent product information.
MIFAB®, Inc., 1321 West 119th Street, Chicago, Illinois 60643-5109, USA Toll Free: 1-800-465-2736 • Fax: 1-773-341-3049
All sales subject to MIFAB's® Terms & Warranties. Please refer to inside front cover. sales@mifab.com • Canada Toll Free: 1-800-387-3880

F1480(-FL) AREA DRAIN WITH 12 3/4" x 12 3/4" HEAVY DUTY TRACTOR GRATE & DEEP SUMP F1480(-FL)

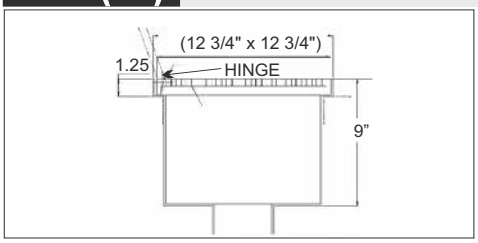

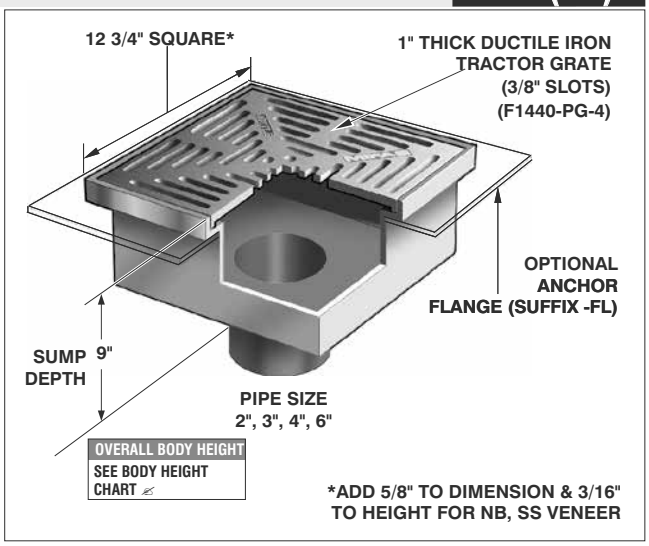

PARTS

A1 BODY	A3-PG	F1440-PG-(*)	F1480T-PB

(*) DENOTES STRAINER FINISH (-1, -3 OR -4)

F1480 BODY HEIGHT

PIPE SIZE	NO HUB STANDARD	PUSH ON (P)	THREADED (T)	INSIDE CAULK (X)
ALL	12" (305)	12 3/8" (314)	11 1/4" (286)	12 3/4" (324)

AREA DRAIN WITH 12 3/4" SQUARE HEAVY DUTY HINGED TRACTOR GRATE AND DEEP SUMP BODY

MODEL NUMBER	WT. Lbs	STRAINER DESCRIPTION	LIST PRICE LACQUERED CAST IRON BODY WITH: DUCTILE IRON (-4)	NICKEL BRONZE (VENEER) (-1)	STAINLESS STEEL (VENEER) (-3)
F1482,3,4,6	55.00	12 3/4" x 12 3/4" tractor grate	$ 1881.00	$ 3019.00	$ 3019.00
F1482,3,4,6-FL	55.00	12 3/4" x 12 3/4" tractor grate with anchor flange	$ 2275.00	$ 3411.00	$ 3411.00

F1480 AND F1490 OPTIONAL VARIATIONS:

SUFFIX	DESCRIPTION	F1480	F1490	SUFFIX	DESCRIPTION	F1480	F1490
-5	Sediment bucket (F1480-PB for F1480, F1490-PB for F1490)	$ 427.00	$ 427.00	-22	Less grate (-4) **Deduct**	-$ 266.00	-$ 740.00
-6	Vandal proof secured grate (TR30 Torx and pin) (H-1072B)	$ 195.00	$ 195.00	-22	Less grate (-1 or -3) **Deduct**	-$ 765.00	-$ 2316.00
-7	Trap seal primer tapping	$ 214.00	$ 214.00	-28	Stainless Steel body (Type 304)(2",3",4" NH)	$ 9403.00	$ 9403.00
-7MG	MI-GARD, Floor Drain Trap Seal	See TSP book		-150	Half grate	$ 201.00	$ 201.00
-8	Backwater valve (BV1250 Series) (2", 3", 4")	$ 497.00	$ 497.00	-175	Three quarter grate	$ 201.00	$ 201.00
-11	All Acid resistant epoxy coated	$ 1366.00	$1366.00	-C	Membrane clamp (-FL only)	$ 373.00	$ 568.00
-13	All galvanized	$ 1366.00	$1366.00	P	Push on outlet (2", 3" or 4")	No Add	No Add
-20	Secondary dome strainer (FS1500-PD)	$ 192.00	$ 192.00	T	Threaded outlet (2", 3" or 4")	$ 107.00	$ 107.00
-21	Secondary flat strainer (FD-9600 Series)	$ 78.00	$ 78.00	X	Inside caulk outlet (2", 3" or 4")	No Add	No Add

F1490(-FL) AREA DRAIN WITH 15 3/4" SQ. HEAVY DUTY TRACTOR GRATE & DEEP SUMP F1490(-FL)

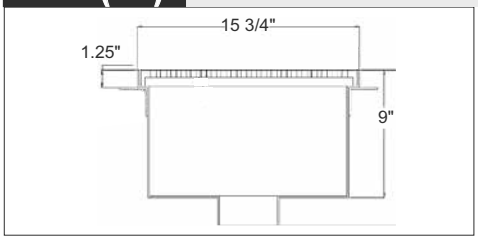

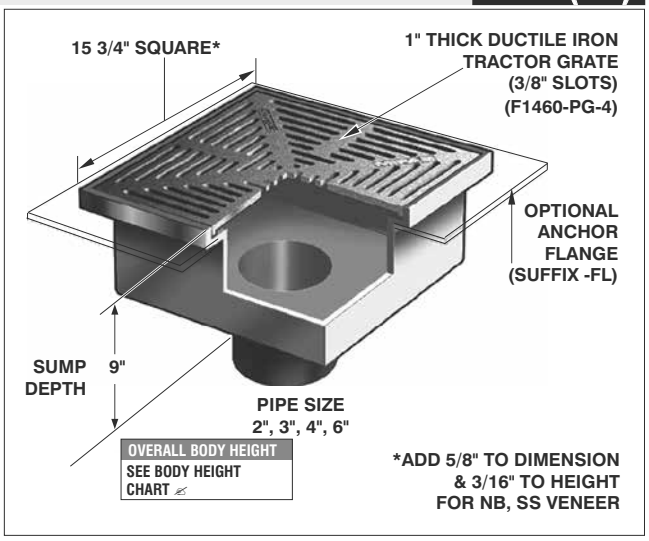

PARTS

A1 BODY	A3-PG	F1460-PG-(*)	F1490T-PB

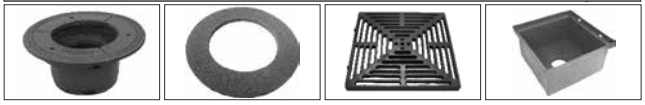

(*) DENOTES STRAINER FINISH (-1, -3 OR -4)

F1490 BODY HEIGHT

PIPE SIZE	NO HUB STANDARD	PUSH ON (P)	THREADED (T)	INSIDE CAULK (X)
ALL	12" (305)	12 3/8" (314)	11 1/4" (286)	12 3/4" (324)

AREA DRAIN WITH 15 3/4" SQUARE HEAVY DUTY TRACTOR GRATE & DEEP SUMP BODY

MODEL NUMBER	WT. Lbs	STRAINER DESCRIPTION	LIST PRICE LACQUERED CAST IRON BODY WITH: DUCTILE IRON (-4)	NICKEL BRONZE (VENEER) (-1)	STAINLESS STEEL (VENEER) (-3)
F1492,3,4,6	69.00	15 3/4" x 15 3/4" Tractor grate	$ 3763.00	$ 6465.00	$ 6465.00
F1492,3,4,6-FL	69.00	15 3/4" x 15 3/4" Tractor grate with anchor flange	$ 4550.00	$ 6944.00	$ 6944.00

F1510 12" x 12" EPOXY COATED PARKING AREA FLOOR DRAIN WITH HEAVY DUTY HINGED TRACTOR GRATE & SEDIMENT BUCKET (CONFORMS TO CSA STD. S413-94) F1510

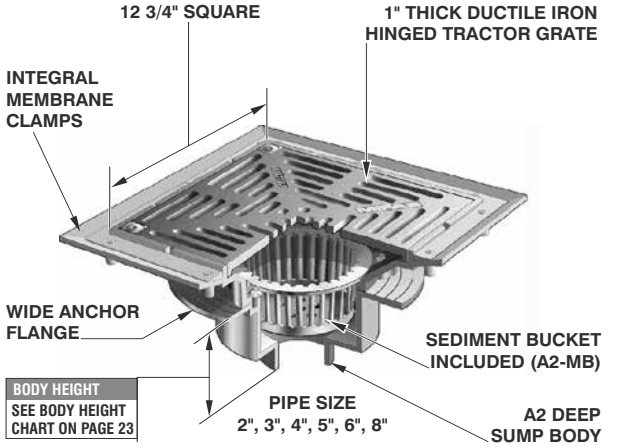

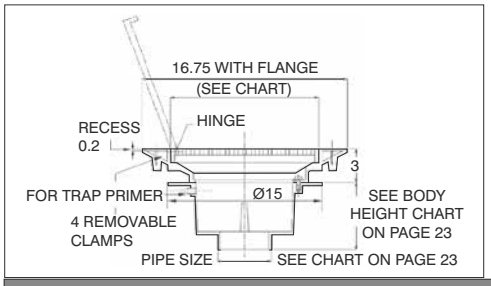

PARTS	A2 BODY	F1510-TA-4	A2-MB	HS-1

EPOXY COATED PARKING AREA FLOOR DRAIN		
MODEL NUMBER	WT. Lbs	LACQUERED CAST IRON BODY WITH DUCTILE IRON HINGED GRATE (-4)
F1512,3,4,6,8	55.00	$ 5288.00

F1510 OPTIONAL VARIATIONS:

SUFFIX	DESCRIPTION	LIST PRICE	SUFFIX	DESCRIPTION	LIST PRICE
-6	Vandal proof secured grate (TR30 Torx and pin)	$ 195.00	-80	Aluminum top assembly (Medium duty load rated)	No Add
-7	Trap seal primer tapping	$ 214.00	-C	Membrane clamp	$ 427.00
-7MG	MI-GARD, Floor Drain Trap Seal	See TSP book	-TE	2" Extension (F1510-TE)	$ 427.00
-8	Backwater valve (BV1250 Series) (2", 3", 4")	$ 497.00			

F1530 PARKING AREA DRAIN WITH 9" ROUND HEAVY DUTY TRACTOR GRATE W/DEEP SUMP & HEAVY DUTY MEMBRANE COLLAR W/SEEPAGE OPENINGS F1530

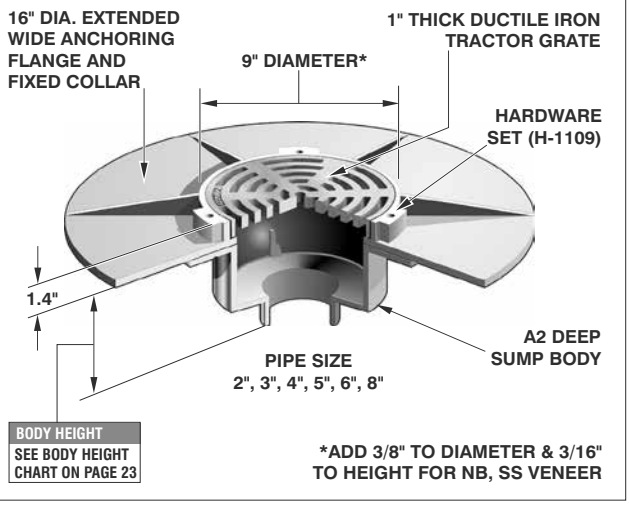

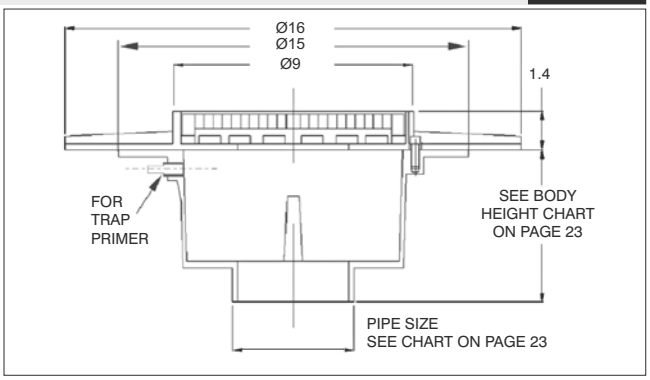

PARTS	A2 BODY	F1530-TA-(*)	H-1109
(*) DENOTES STRAINER FINISH (-1, -3 OR -4)			

PARKING AREA DRAIN WITH 9" ROUND HEAVY DUTY TRACTOR GRATE					
MODEL NUMBER	WT. Lbs	STRAINER DESCRIPTION	LIST PRICE LACQUERED CAST IRON BODY WITH: DUCTILE IRON (-4)	NICKEL BRONZE (VENEER) (-1)	STAINLESS STEEL (VENEER) (-3)
F1532,3,4,6,8	45.00	9" Dia. tractor grate	$ 1671.00	$ 2415.00	$ 2415.00

F1530 OPTIONAL VARIATIONS:

SUFFIX	DESCRIPTION	LIST PRICE	SUFFIX	DESCRIPTION	LIST PRICE
-5	Sediment bucket (A2-MB)	$ 185.00	-13	All galvanized	$ 966.00
-6	Vandal proof secured grate (TR30 Torx and pin) (H-1072)	$ 195.00	-30	PVC Socket Connection Body* (2", 3", 4")	No Add
-7	Trap seal primer tapping	$ 214.00	-31	ABS Socket Connection Body* (2", 3", 4")	No Add
-7MG	MI-GARD, Floor Drain Trap Seal	See TSP book	-90	Threaded side outlet (2", 3", or 4") (N/A -30, -31) No Add for -NH	$ 481.00
-8	Backwater valve (BV1250 Series) (2", 3", 4")	$ 497.00	P	Push on outlet (2", 3", 4" or 6")	No Add
-11	All Acid resistant epoxy coated	$ 973.00	T	Threaded outlet (2", 3", 4" or 6")	$ 107.00
-12	Galvanized grate	$ 490.00	X	Inside caulk outlet (2", 3", 4" or 6")	No Add

*PVC/ABS Socket bodies available for 2", 3" or 4" connection sizes

*ADD -NH TO -90 FOR NO HUB OUTLET - NO ADD .

Design and dimensions are subject to modification. Prices do not include applicable taxes. Visit **www.mifab.com** for the most recent product information.
MIFAB®, Inc., 1321 West 119th Street, Chicago, Illinois 60643-5109, USA Toll Free: 1-800-465-2736 • Fax: 1-773-341-3049
All sales subject to MIFAB's® Terms & Warranties. Please refer to inside front cover. sales@mifab.com • Canada Toll Free: 1-800-387-3880

F1540 PARKING AREA DRAIN WITH 12 3/4" ROUND HEAVY DUTY TRACTOR GRATE WITH DEEP SUMP AND HEAVY DUTY MEMBRANE COLLAR WITH SEEPAGE OPENINGS F1540

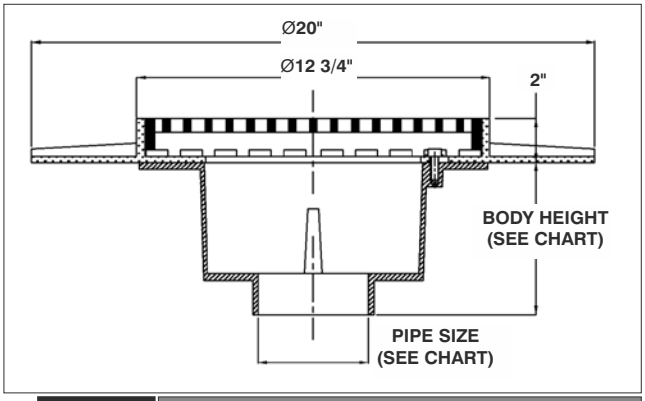

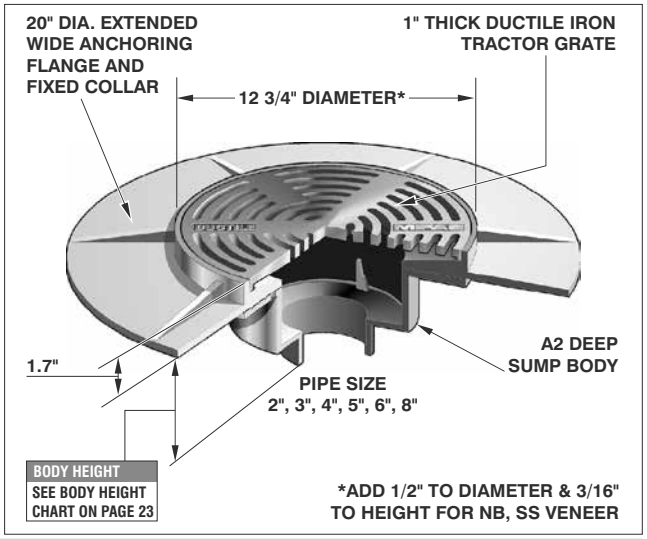

PARTS	A2 BODY	F1540-TA-(*)	HS-1
(*) Denotes Strainer finish (-1, -3 or -4)			

PARKING AREA DRAIN WITH 12 3/4" ROUND HEAVY DUTY TRACTOR GRATE

MODEL NUMBER	WT. Lbs	STRAINER DESCRIPTION	LIST PRICE LACQUERED CAST IRON BODY WITH: DUCTILE IRON (-4)	NICKEL BRONZE (VENEER) (-1)	STAINLESS STEEL (VENEER) (-3)
F1542,3,4,6	75.00	12 3/4" Dia. tractor grate	$ 3281.00	$ 4974.00	$ 4974.00
F1548	48.00	12 3/4" Dia. tractor grate	$ 3672.00	$ 5373.00	$ 5373.00

F1540 AND F1550 OPTIONAL VARIATIONS:

SUFFIX	DESCRIPTION	LIST PRICE	SUFFIX	DESCRIPTION	LIST PRICE
-5	Sediment bucket (A2-MB)	$ 357.00	-13	All galvanized	$ 1423.00
-6	Vandal proof secured grate (TR30 Torx and pin) (H-1072)	$ 195.00	-30	PVC Socket Connection Body* (2", 3", 4")	No Add
-7	Trap seal primer tapping	$ 214.00	-31	ABS Socket Connection Body* (2", 3", 4")	No Add
-7MG	MI-GARD, Floor Drain Trap Seal	See TSP book	-90	Threaded side outlet (2", 3" or 4") (N/A -30, -31) No Add for -NH	$ 481.00
-8	Backwater valve (BV1250 Series) (2", 3", 4")	$ 497.00	P	Push on outlet (2", 3", 4" or 6")	No Add
-11	All acid resistant epoxy coated	$ 1423.00	T	Threaded outlet (2", 3", 4", 5" or 6")	$ 107.00
-12	Galvanized grate	$ 722.00	X	Inside caulk outlet (2", 3", 4", 5" or 6")	No Add

*PVC/ABS SOCKET BODIES AVAILABLE FOR 2", 3" OR 4" CONNECTION SIZES

*ADD -NH TO -90 FOR NO HUB OUTLET - NO ADD.

F1550 PARKING AREA DRAIN WITH 16" ROUND HEAVY DUTY TRACTOR GRATE WITH DEEP SUMP AND HEAVY DUTY MEMBRANE COLLAR WITH SEEPAGE OPENINGS F1550

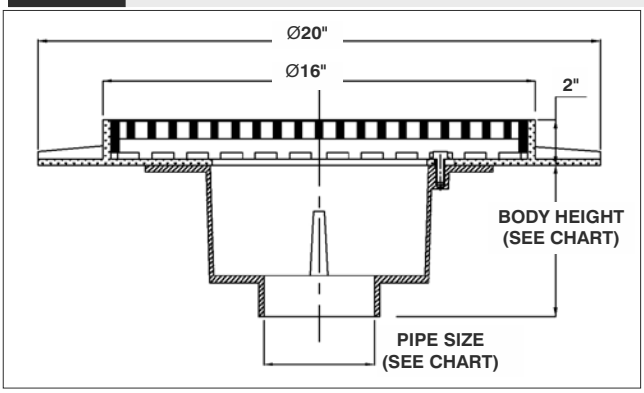

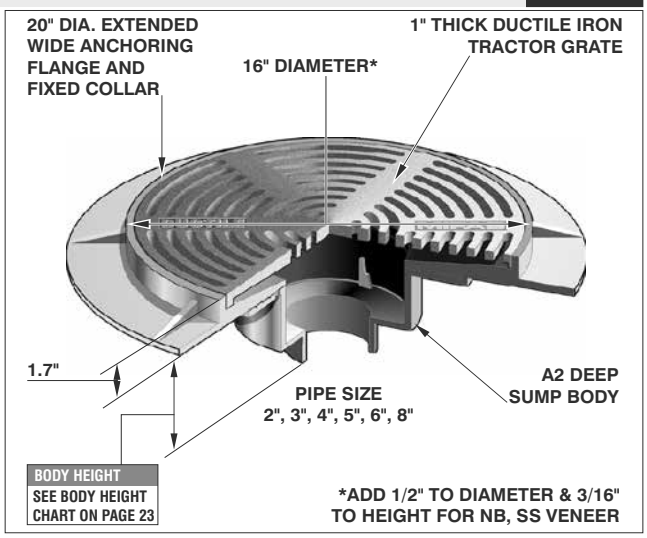

PARTS	A2 BODY	F1550-TA-(*)	HS-1
(*) DENOTES STRAINER FINISH (-1, -3 OR -4)			

PARKING AREA DRAIN WITH 16" ROUND HEAVY DUTY TRACTOR GRATE WITH DEEP SUMP

MODEL NUMBER	WT. Lbs	STRAINER DESCRIPTION	LIST PRICE LACQUERED CAST IRON BODY WITH: DUCTILE IRON (-4)	NICKEL BRONZE (VENEER) (-1)	STAINLESS STEEL (VENEER) (-3)
F1552,3,4,6	75.00	16" Dia. tractor grate	$ 4091.00	$ 5263.00	$ 5263.00
F1558	78.00	16" Dia. tractor grate	$ 4584.00	$ 5755.00	$ 5755.00

F1560 12 3/4" x 12 3/4" HEAVY DUTY AREA DRAIN WITH INTERNAL TRAP & SEDIMENT BUCKET F1560

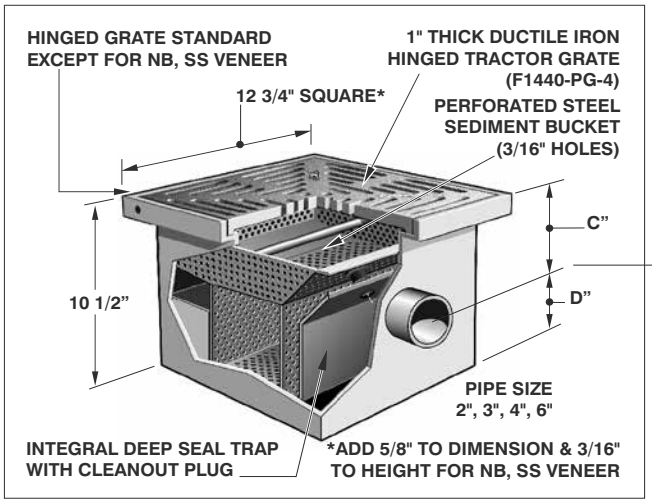

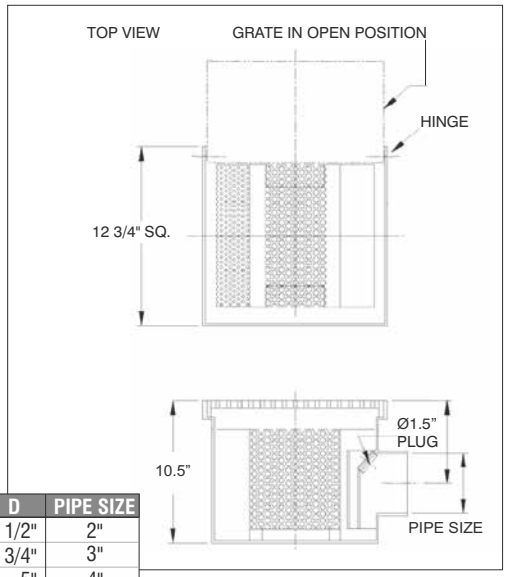

12 3/4" x 12 3/4" HEAVY DUTY AREA DRAIN WITH INTERNAL TRAP			
MODEL NUMBER	WT. Lbs	LACQUERED CAST IRON BODY WITH DUCTILE IRON (-4)	STAINLESS STEEL (VENEER)(-3)
F1562,3,4,6	50.00	$ 3532.00	$ 5032.00

	C	D	PIPE SIZE
F1562	6"	4 1/2"	2"
F1563	5 3/4"	4 3/4"	3"
F1564	5 1/2"	5"	4"
F1566	5 1/4"	5 1/4"	6"

F1560 OPTIONAL VARIATIONS:

SUFFIX	DESCRIPTION	LIST PRICE	SUFFIX	DESCRIPTION	LIST PRICE
-6	Vandal proof secured grate (TR30 Torx and pin) (H-1072B)	$ 195.00	-13	Galvanized body and grate	$ 1898.00
-7	Trap Seal primer tapping	$ 196.00	-28	Stainless Steel body (Type 304)	$ 9403.00
-11	Acid resistant epoxy coated body and grate	$ 2161.00	-C	Membrane clamp	$ 431.00
-12	Galvanized grate	$ 805.00	-FL	Anchor flange	$ 594.00
			-GS	Grounding strap	$ 927.00

F1570 24 1/2" x 24 1/2" HEAVY DUTY PARKING AREA CATCH BASIN F1570

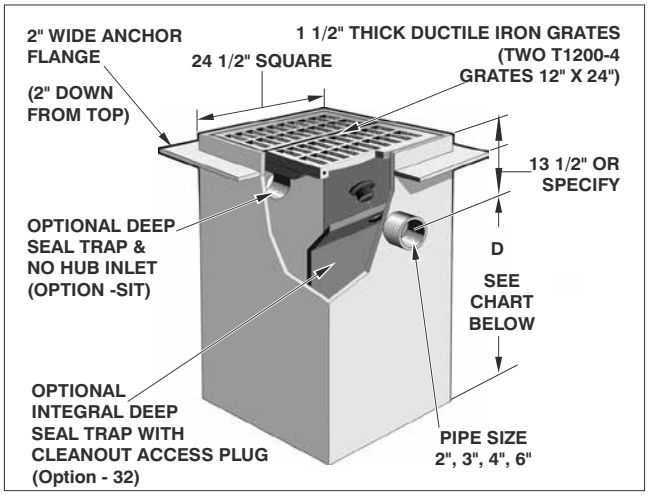

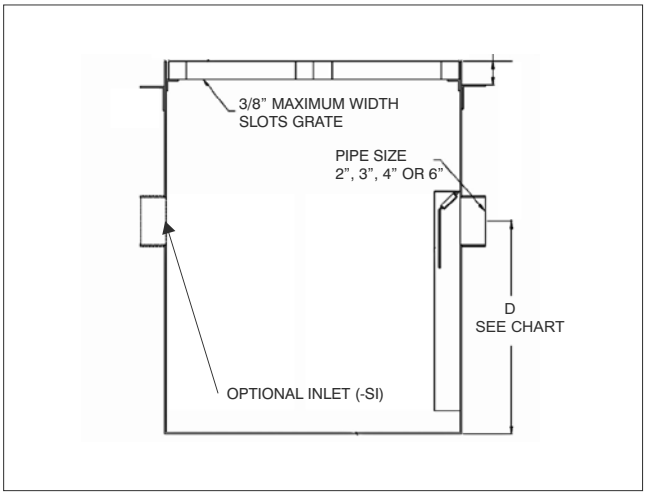

24 1/2" x 24 1/2" HEAVY DUTY PARKING AREA CATCH BASIN			
MODEL NUMBER	WT. Lbs	LIST PRICE BAKED EPOXY COATED STEEL BODY WITH: DUCTILE IRON (-4)	STAINLESS STEEL (VENEER) (-3)
F1572,3,4,6A	650.00	$ 12,935.00	$ 27,033.00
F1572,3,4,6B	872.00	$ 13,706.00	$ 27,803.00
F1572,3,4,6C	1100.00	$ 14,379.00	$ 28,476.00
F1572,3,4,6D	1300.00	$ 16,246.00	$ 30,344.00

BODY DEPTH		
MODEL NO.	"D"	OVERALL DEPTH
F1570A	18"	31.5"
F1570B	24"	37.5"
F1570C	30"	43.5"
F1570D	36"	49.5"

F1570 OPTIONAL VARIATIONS:

SUFFIX	DESCRIPTION	LIST PRICE	SUFFIX	DESCRIPTION	LIST PRICE
-6	Vandal proof secured grate (TR30 Torx and pin) (H-1072B)	$ 432.00	-C	Membrane Clamp	$ 775.00
-13	All galvanized	$ 2478.00	-SI	No hub side inlet	$ 384.00
-28	Stainless Steel body (Type 304)	$ 14,098.00	-SIT	Side inlet with trap	$ 775.00
-32	Integral deep seal trap with clean out access plug	$ 740.00			

Design and dimensions are subject to modification. Prices do not include applicable taxes. Visit **www.mifab.com** for the most recent product information.
MIFAB®, Inc., 1321 West 119th Street, Chicago, Illinois 60643-5109, USA Toll Free: 1-800-465-2736 • Fax: 1-773-341-3049
All sales subject to MIFAB's® Terms & Warranties. Please refer to inside front cover. sales@mifab.com • Canada Toll Free: 1-800-387-3880

F1580 24 1/2" x 24 1/2" HEAVY DUTY DEEP SUMP AREA DRAIN WITH BOTTOM OUTLET F1580

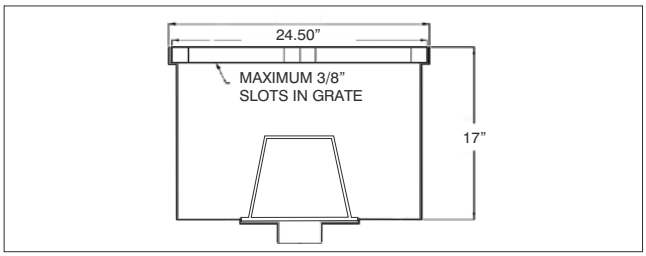

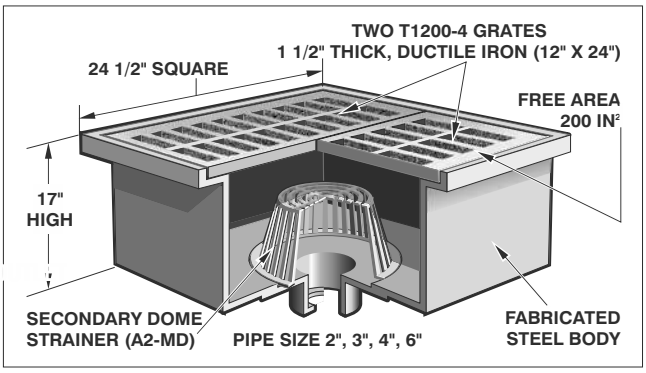

24 1/2" x 24 1/2" HEAVY DUTY DEEP SUMP AREA DRAIN W/BOTTO			
MODEL NUMBER	WT. Lbs	BAKED EPOXY COATED STEEL BODY WITH: DUCTILE IRON (-4)	STAINLESS STEEL (VENEER) (-3)
F1582,3,4,6	400.00	$ 17,047.00	$ 21,227.00

F1580 OPTIONAL VARIATIONS:

SUFFIX	DESCRIPTION	LIST PRICE	SUFFIX	DESCRIPTION	LIST PRICE
-5	Sediment bucket (F1580-SB)	$ 582.00	-13	All galvanized	$ 2478.00
-6	Vandal proof secured grates (TR30 Torx and pin) (H-1072B)	$ 595.00	-28	Stainless Steel Body (Type 304)	$ 9403.00
-8	Backwater valve (BV1250 Series)(2", 3", 4")	$ 497.00	-FL	Anchor flange	$ 967.00
-12	Galvanized grates	$ 1264.00	-FLC	Anchor flange and membrane clamp	$ 2399.00

F1590 24 1/2" x 24 1/2" HEAVY DUTY AREA DRAIN WITH OFFSET BOTTOM OUTLET F1590

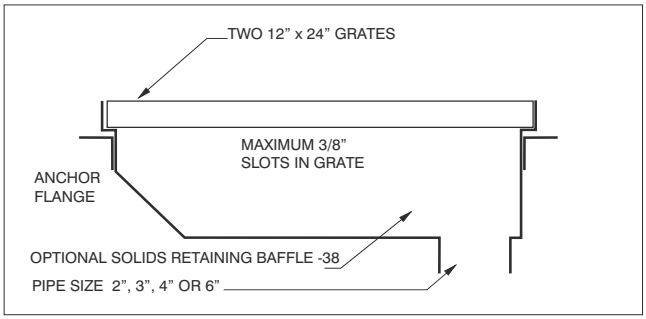

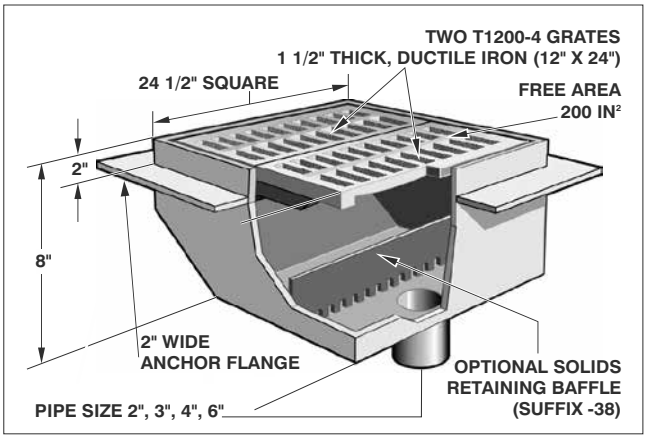

24 1/2" x 24 1/2" HEAVY DUTY AREA DRAIN WITH OFFSET BOTTOM OUTLET			
MODEL NUMBER	WT. Lbs	BAKED EPOXY COATED STEEL BODY WITH: DUCTILE IRON (-4)	STAINLESS STEEL (VENEER) (-3)
F1592,3,4,6	400.00	$ 17,047.00	$ 21,227.00

F1590 OPTIONAL VARIATIONS:

SUFFIX	DESCRIPTION	LIST PRICE	SUFFIX	DESCRIPTION	LIST PRICE
-5	Sediment bucket (F1590-SB)	$ 582.00	-13	All galvanized	$ 2478.00
-6	Vandal proof secured grates (TR30 Torx and pin) (H-1072B)	$ 595.00	-28	Stainless Steel Body (Type 304)	$ 9403.00
-8	Backwater valve (BV1250 Series) (2", 3", 4")	$ 497.00	-38	Solids retaining baffle	$ 967.00
-12	Galvanized grates	$ 1264.00	-C	Membrane clamp	$ 2399.00

F1590-90 24 1/2" x 24 1/2" HEAVY DUTY PARKING AREA DRAIN WITH SIDE OUTLET F1590-90

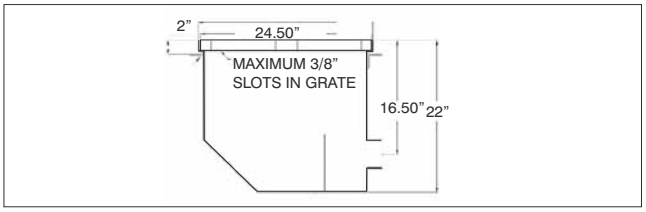

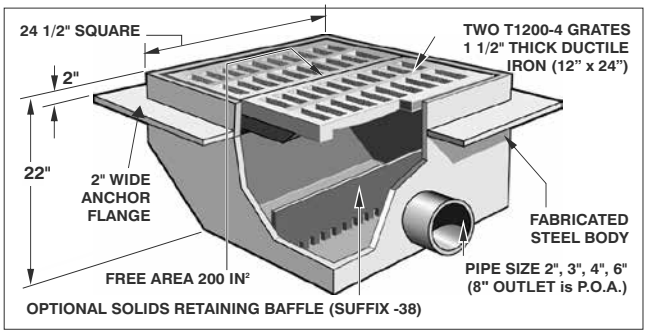

24 1/2" x 24 1/2" HEAVY DUTY PARKING AREA DRAIN WITH SIDE OUTLET			
MODEL NUMBER	WT. Lbs	BAKED EPOXY COATED STEEL BODY WITH: DUCTILE IRON (-4)	STAINLESS STEEL (VENEER) (-3)
F1592,3,4,6-90	400.00	$ 17,047.00	$ 21,227.00

F1590-90 OPTIONAL VARIATIONS:

SUFFIX	DESCRIPTION	LIST PRICE	SUFFIX	DESCRIPTION	LIST PRICE
-5	Sediment bucket (F1590-SB)	$ 582.00	-28	Stainless Steel Body (Type 304)	$ 9403.00
-6	Vandal proof secured grates (TR30 Torx and pin) (H-1072B)	$ 595.00	-38	Solids retaining baffle	$ 967.00
-12	Galvanized grates	$ 1264.00	-C	Membrane clamp	$ 1430.00
-13	All galvanized	$ 2478.00			

F1600-C ISOLATION FLOOR DRAIN WITH ROUND REINFORCED ADJ. STRAINER F1600-C

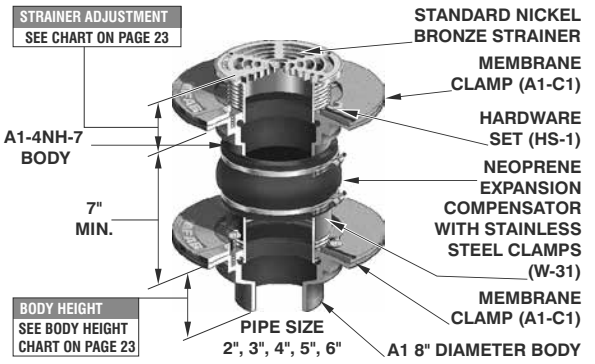

(See page 23 for photo of A1-6NH-7 body)

Note: Flow through shank of top assembly is equal to 4" pipe.

PARTS

(*) DENOTES STRAINER SIZE (5", 6", 7" OR 8")
(**) DENOTES STRAINER FINISH (-1, -3 OR -4)

F1600-C ISOLATION DRAIN WITH ROUND REINFORCED ADJUSTABLE STRAINER

MODEL NUMBER	WT. Lbs	STRAINER DESCRIPTION	LIST PRICE LACQUERED CAST IRON BODY WITH: DUCTILE IRON (-4)	NICKEL BRONZE (-1)	STAINLESS STEEL (-3)
F1602,3,4-C-5	15.00	5" Diameter	$ 1756.00	$ 1833.00	$ 1833.00
F1602,3,4-C-6	17.00	6" Diameter	-	$ 1972.00	$ 1972.00
F1602,3,4-C-7	17.50	7" Diameter	-	$ 2088.00	$ 2088.00
F1602,3,4-C-8	19.00	8" Diameter	$ 2117.00	$ 2311.00	$ 2311.00

F1620-C ISOLATION AREA DRAIN WITH 9" ROUND ADJ. TRACTOR GRATE F1620-C

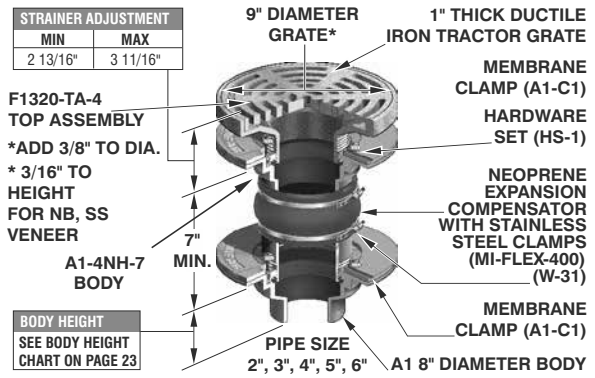

(See page 23 for photo of A1-6NH-7 body)

Note: Flow through shank of top assembly is equal to 4" pipe.

PARTS

(*) Denotes strainer finish (-1, -3 or -4)

F1620-C ISOLATION FLOOR DRAIN WITH 9" ROUND ADJUSTABLE TRACTOR GRATE

MODEL NUMBER	WT. Lbs	STRAINER DESCRIPTION	LACQUERED CAST IRON BODY WITH: DUCTILE IRON (-4)	NICKEL BRONZE (VENEER)(-1)	STAINLESS STEEL (VENEER) (-3)
F1622,3,4-C	24.00	9" Diameter	$ 2321.00	$ 2786.00	$ 2786.00

ANSI/ASME RATING

STRAINER	FREE AREA	LOAD RATING
F1320-TA-4	18.0 IN²	OVER 10,000 lbs

F1600-C AND F1620-C OPTIONAL VARIATIONS:

SUFFIX	DESCRIPTION	F1600-C	F1620-C	SUFFIX	DESCRIPTION	F1600-C	F1620-C
-5	Sediment bucket (A1-PB)	$ 144.00	$ 185.00	-41	Sump receiver (A1-BP)	$ 337.00	$ 337.00
-6	Vandal proof (TR25 (F1600), TR30 (F1620) Torx and pin)	$ 79.00	$ 195.00	-49	Chr. Pl. strainer assembly (-1 only)	$ 59.00	N/A
-7	Trap seal primer tapping	No Add	No Add	-90	Threaded side outlet (N/A -30, -31) No Add for -NH	$ 287.00	$ 287.00
-7MG	MI-GARD, Floor Drain Trap Seal	See TSP book		-95	Client logo	$ 1175.00	1175.00
-8	Backwater valve (BV1250 Series) (2",3", 4")	$ 497.00	$ 497.00	-C2	High rough in membrane clamp (A1-C2)	$ 103.00	$ 103.00
-10	Decorative polished top	$ 221.00	N/A	-F4-(1,3)	4" NB or SS round funnel	$ 583.00	$ 583.00
-11	Acid resistant epoxy coated body (& clamp if needed)	$ 1488.00	$ 1560.00	-F4-50	4" cast iron round funnel	$ 247.00	$ 247.00
-13	Galvanized body (& clamp if needed)	$ 1488.00	$ 1560.00	-F6-(1,3)	6" NB or SS round funnel	$ 862.00	$ 862.00
-15	Extension (DD-50)	$ 185.00	$ 185.00	-F6-50	6" cast iron round funnel	$ 395.00	$ 395.00
-16	Square top	-	$ 308.00	-G-(1,3)	4" x 9" NB or SS oval funnel	$ 1204.00	$ 1204.00
-20	Secondary dome strainer	-	$ 192.00	-G-50	4" x 9" C.I. oval funnel	$ 583.00	$ 583.00
-21	Secondary flat strainer (FD-9600 Series)	$ 78.00	$ 78.00	-J-(1,3)	3" x 1" NB or SS oval funnel	$ 607.00	$ 607.00
-24	Solid secured cover	-	$ 759.00	-J-50	3" x 1" cast iron oval funnel	$ 276.00	$ 276.00
-28	Stainless Steel Body (Type 304) (2", 3", 4" No Hub only)	$ 3162.00	$ 3162.00	P	Push on outlet (2", 3" or 4")	No Add	No Add
-30	PVC Socket Connection Body* (2", 3", 4")	No Add	No Add	T	Threaded outlet (2", 3" or 4")	$ 107.00	$ 107.00
-31	ABS Socket Connection Body* (2", 3", 4")	No Add	No Add	-Z	Extended wide elastomeric flange on body	$ 1724.00	$ 1724.00
-32	Integral 2,3,4" Deep Seal Trap (MI-950 Series)	See MI-950, pg.289		X	Inside caulk outlet (2", 3" or 4")	No Add	No Add
-34	Closure plug (C1440 Series)	$ 477.00	$ 477.00	6	6" no hub outlet	$ 707.00	$ 707.00
-40	Underdeck clamp (A1-C3)	$ 196.00	$ 196.00				

Design and dimensions are subject to modification. Prices do not include applicable taxes. Visit **www.mifab.com** for the most recent product information.
MIFAB®, Inc., 1321 West 119th Street, Chicago, Illinois 60643-5109, USA Toll Free: 1-800-465-2736 • Fax: 1-773-341-3049
All sales subject to MIFAB's® Terms & Warranties. Please refer to inside front cover. sales@mifab.com • Canada Toll Free: 1-800-387-3880

F1640 DUAL 9" ADJUSTABLE DRAIN SET F1640

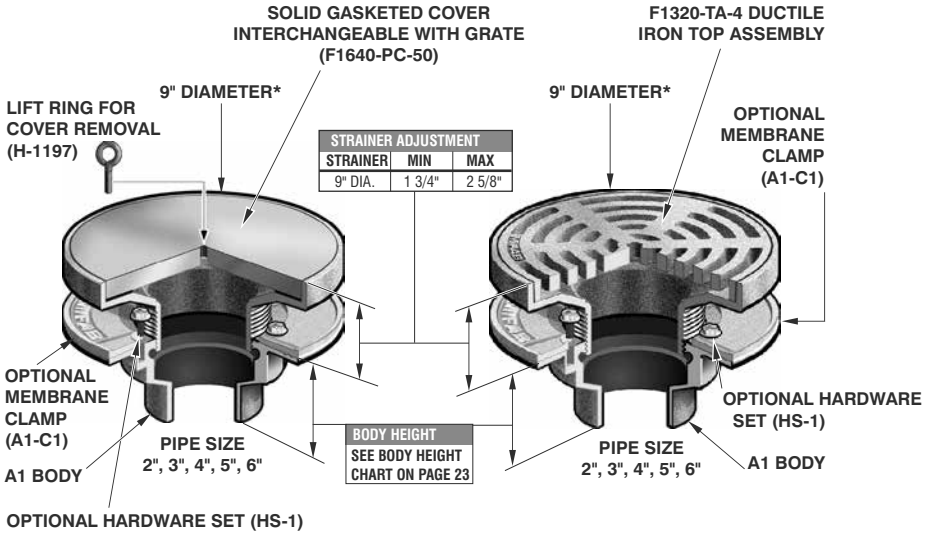

STRAINER ADJUSTMENT		
STRAINER	MIN	MAX
9" DIA.	1 3/4"	2 5/8"

BODY HEIGHT
SEE BODY HEIGHT CHART ON PAGE 23

***ADD 3/8" TO DIAMETER AND 3/16" TO HEIGHT FOR NB, SS VENEER**

(See page 23 for photo of A1-6NH-7 body)

LACQUERED CAST IRON FLOOR DRAINS (2) WITH ONE TRACTOR GRATE & ONE GASKETED SOLID COVER				
MODEL NUMBER	WT. Lbs	GRATE & PLUG DIAMETER	DUCTILE IRON (-4)	STAINLESS STEEL (VENEER) (-3)
F1642,3,4	35.00	9"	$ 1969.00	$ 5594.00
ONE DRAIN WITH SOLID COVER ONLY (SUFFIX -SC)			$ 1484.00	$ 4198.00

PARTS

A1 BODY	F1320-TA-(*)	F1640-PC-(*)
X2		

(*) DENOTES STRAINER FINISH (-3 OR -4)

NOTE: FLOW THROUGH SHANK OF TOP ASSEMBLY IS EQUAL TO 4" PIPE.

F1640 OPTIONAL VARIATIONS:		
SUFFIX	DESCRIPTION	LIST PRICE
-5	Sediment bucket (A1-MB, 2 pieces)	$ 185.00
-11	All acid resistant epoxy coated	$ 1261.00
-13	All galvanized	$ 1261.00
-15	Extension (DD-50, 2 pieces)	$ 370.00
-21	Secondary flat strainer (FD-9600, 2 pieces)	$ 156.00
-30	PVC Socket Connection Body (2", 3", 4")	No Add
-31	ABS Socket Connection Body (2",3",4")	No Add
P	Push on outlet (2", 3" or 4")	No Add
T	Threaded outlet (2", 3" or 4")	$ 214.00
X	Inside caulk outlet (2", 3", or 4")	No Add
6	6" no hub outlet	$ 1414.00

F1650 FLUSHING RIM FLOOR DRAIN

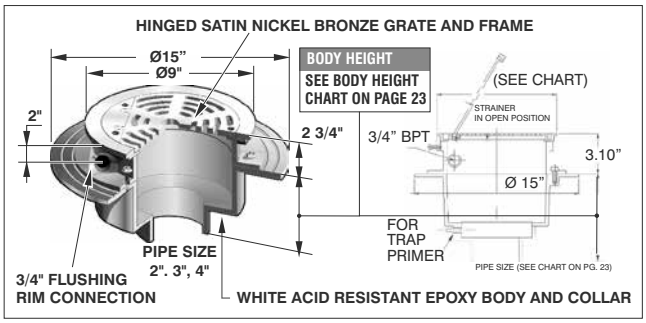

PARTS (*) Denotes outlet size (2", 3" or 4")

A2-11 BODY	HS-1	F1650-PC-50	F1650-TA-1

A.R.E. COATED CAST IRON BODY WITH HINGED GRATE & FLUSHING RIM CONNECTION

MODEL NUMBER	WT. Lbs	STAINLESS STEEL (-3)	NICKEL BRONZE (-1)
F1652,3,4	33.00	$ 3584.00	$ 3584.00

ANSI/ASME RATING

STRAINER	FREE AREA	LOAD RATING	STRAINER	FREE AREA	LOAD RATING
9" DIA NB	18.0 IN²	2000-4000 lbs	9" DIA SS	18.0 IN²	5000-7499 lbs

F1650 AND F1650-G OPTIONAL VARIATIONS:

SUFFIX	DESCRIPTION	LIST PRICE
-6	Vandal proof fixed grate (TR25 Torx and pin)	$ 196.00
-30	PVC socket connection body (F1650 only) (2", 3", 4")	No Add
-31	ABS socket connection body (F1650 only) (2", 3", 4")	No Add
-A	Loose set grate	$ 382.00
P	Push on outlet (2", 3", 4")	No Add
T	Threaded outlet (2", 3", 4")	$ 107.00
X	Inside caulk outlet (2", 3", 4")	No Add
-Z	Extended wide flange on body (20"dia. X 1/4" thick)	$ 1724.00

F1650-G FLUSHING RIM FLOOR DRAIN WITH DEEP SEAL TRAP & FLUSHING CONNECTION

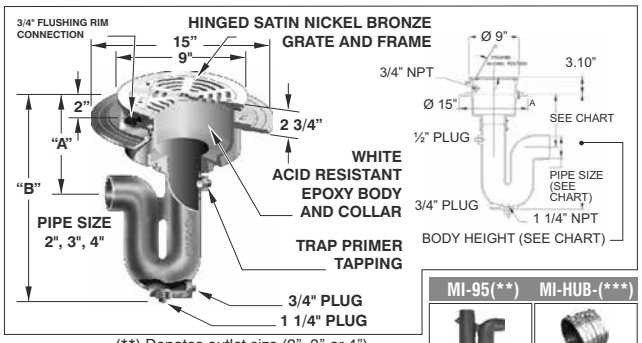

MI-95(**)	MI-HUB-(***)

PARTS (**) Denotes outlet size (2", 3" or 4")
(***) Denotes connection size (2", 3" or 4")

A2-11 BODY	HS-1	F1650-PC-50	F1650-TA-1

F1650-G BODY HEIGHT

PIPE SIZE	"B" BODY HEIGHT	"A" DIMENSION THREADED OUTLET	"A" DIMENSION NO HUB OUTLET
2" (51)	20 3/4"	12 5/16"	12 5/16"
3" (76)	24 1/4"	13 1/2"	13 1/2"
4" (102)	25 7/8"	14"	14"

ANSI/ASME RATING

STRAINER	FREE AREA	LOAD RATING	STRAINER	FREE AREA	LOAD RATING
9" DIA NB	18.0 IN²	2000-4000 lbs	9" DIA SS	18.0 IN²	5000-7499 lbs

A.R.E. COATED CAST IRON BODY W/HINGED GRATE, INTEGRAL TRAP & FLUSHING RIM CONNECTION

MODEL NUMBER	WT. Lbs	NICKEL BRONZE (-1)	STAINLESS STEEL (-3)
F1652-G	50.00	$ 3430.00	$ 3430.00
F1653,4-G	50.00	$ 3561.00	$ 3561.00
Trap with flushing connection			

F1660 24" LARGE CAPACITY FLUSHING RIM FLOOR DRAIN

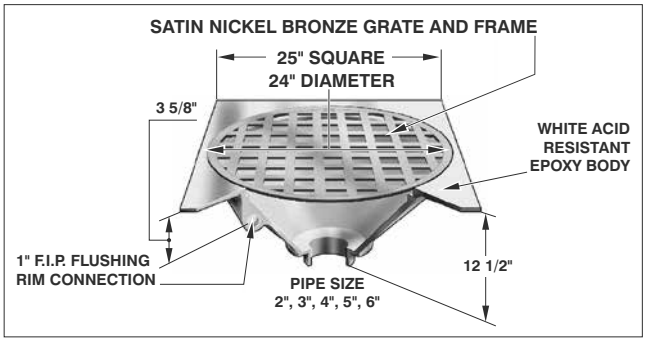

ANSI/ASME RATING

STRAINER	FREE AREA	LOAD RATING
24" DIA.	232.0 IN²	UP TO 2000 lbs

LACQUERED CAST IRON BODY WITH NICKEL BRONZE GRATE & FRAME & FLUSHING RIM CONNECTION

MODEL NUMBER	WT. Lbs	NICKEL BRONZE (-1)
F1662,3,4,6	118.00	$ 22,790.00

F1660 OPTIONAL VARIATIONS:

SUFFIX	DESCRIPTION	LIST PRICE
-5	Sediment bucket	$ 1524.00
-6	Vandal proof fixed grate (TR30 Torx and pin) (H-1072)	$ 271.00
-8	Backwater valve (BV1250 Series) (2", 3", 4")	$ 497.00
-13	Galvanized body	$ 2086.00
-30	PVC socket connection body (2". 3", 4")	No Add
-31	ABS socket connection body (2", 3", 4")	No Add
-G	Trap with flushing connection	$ 967.00
P	Push on outlet (2", 3", 4")	No Add
T	Threaded outlet (2", 3", 4")	$ 107.00
X	Inside caulk outlet (2", 3", 4")	No Add

F1670 WATER SUPPLY CONTROL BOX

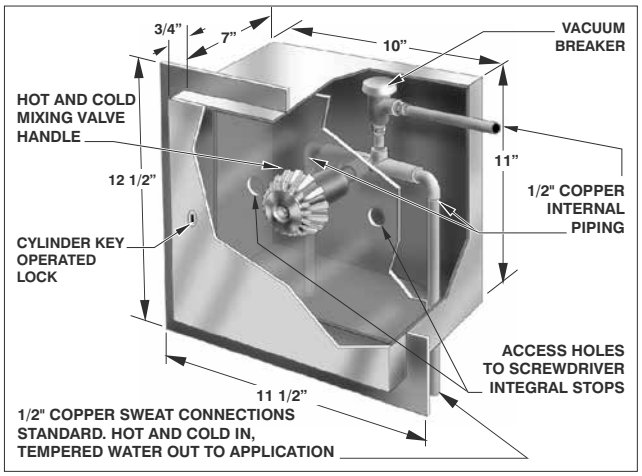

MIFAB Series F1670 water supply control box manufactured from Type 304 stainless steel. Box complete with cylinder key lock. Features single hot and cold mixing valve handle and atmospheric type vacuum breaker with integral screwdriver stops.
Recommended for installation with flushing rim & garbage can wash drains (F1650 and F1350-Y-36)

WATER SUPPLY CONTROL BOX

MODEL NUMBER	WT. Lbs	STAINLESS STEEL (-3)
F1670	18.00	$ 7332.00

WATER SUPPLY CONTROL BOX OPTIONAL VARIATIONS:

SUFFIX	DESCRIPTION	LIST PRICE
-LM	Less Internal Mixing Valve Assembly **(Deduct)**	-$ 2051.00
-RK	Repair kit	$ 2625.00
-S	Surface mounted	No Add

Design and dimensions are subject to modification. Prices do not include applicable taxes. Visit **www.mifab.com** for the most recent product information.
MIFAB®, Inc., 1321 West 119th Street, Chicago, Illinois 60643-5109, USA Toll Free: 1-800-465-2736 • Fax: 1-773-341-3049
All sales subject to MIFAB's® Terms & Warranties. Please refer to inside front cover. sales@mifab.com • Canada Toll Free: 1-800-387-3880

F1760-FL 7" x 15" HEAVY DUTY GUTTER DRAIN WITH ANCHOR FLANGE F1760-FL

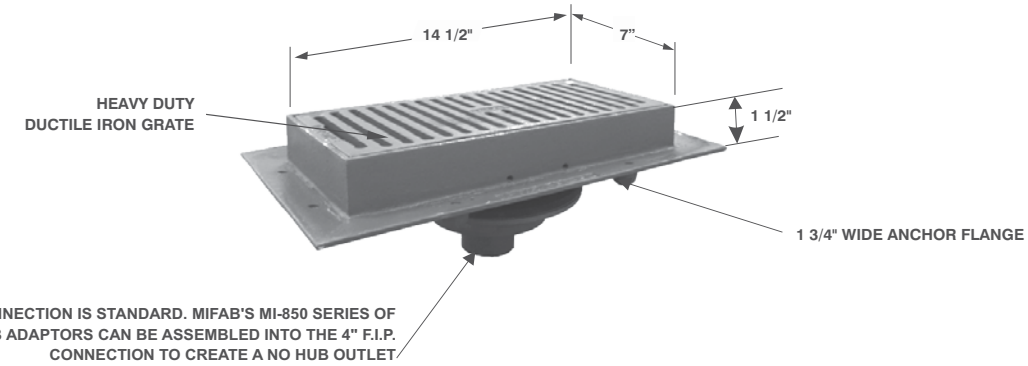

ANSI/ASME RATING		
STRAINER	FREE AREA	LOAD RATING
F1760-PG-4	39.0 IN^2	OVER 10,000 lbs

F1760-FL 7" x 15" HEAVY DUTY GUTTER DRAIN WITH ANCHOR FLANGE			
MODEL NUMBER	WT. Lbs	LACQUERED CAST IRON BODY WITH DUCTILE IRON (-4)	STAINLESS STEEL (VENEER) (-3)
F1762,3,4-FL	30.00	$ 944.00	$ 1768.00

F1760-FL OPTIONAL VARIATIONS:		
SUFFIX	DESCRIPTION	LIST PRICE
-6	Vandal proof secured grate (TR30 Torx & pin)	$ 195.00
-8	Backwater valve (BV1250 Series) (2". 3". 4")	$ 497.00
-11	All acid resistant epoxy coated	$ 645.00
-13	All galvanized	$ 645.00
-22	Less flange (deduct)	-$ 271.00
-C	Membrane clamp	$ 226.00
-NH	No hub outlet connection (use MI-850 Series)	No Add

F1780 INDIRECT WASTE FUNNEL

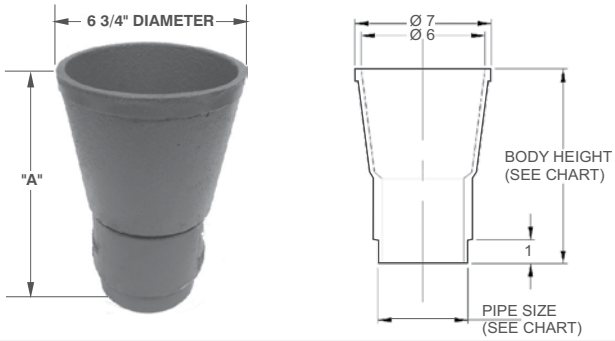

F1780 INDIRECT WASTE FUNNEL			
MODEL NUMBER	WT. Lbs	DESCRIPTION	CAST IRON (-50)
F1782	11.25	2" OUTLET	$ 524.00
F1783	11.75	3" OUTLET	$ 610.00
F1784	12.25	4" OUTLET	$ 1041.00
F1786	12.50	6" OUTLET	$ 1080.00

BODY HEIGHT			
PIPE SIZE	NO HUB (STANDARD)	PUSH ON (P)	PVC (-30) ABS (-31)
2" (51)	10" (254)	10 3/8" (263)	10 3/8" (263)
3" (76)	10" (254)	10 3/8" (263)	10 3/8" (263)
4" (102)	10" (254)	10 3/8" (263)	10 3/8" (263)
6" (152)	8 3/4" (222)	-	-

F1780 OPTIONAL VARIATIONS:		
SUFFIX	DESCRIPTION	LIST PRICE
-11	All acid resistant epoxy coated	$ 411.00
-13	All galvanized	$ 469.00
-20	Secondary dome strainer (FS1500-PD)	$ 192.00
-21	Secondary flat strainer (FD-9600 Series)	$ 78.00
-30	PVC socket connection body* (2", 3", 4")	No Add
-31	ABS socket connection body* (2", 3", 4")	No Add
P	Push on connection (2", 3", 4")	No Add

INDIRECT WASTE FUNNEL WITH BACKWATER VALVE F1790

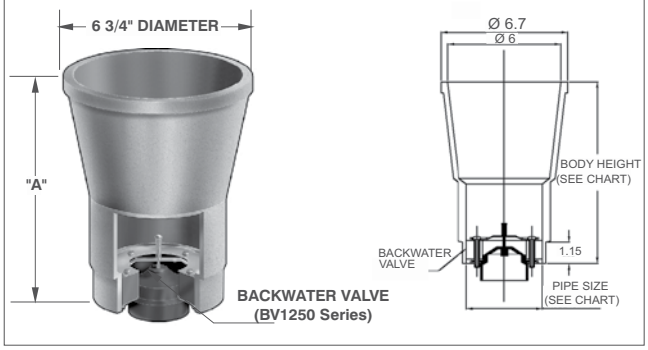

F1790 INDIRECT WASTE FUNNEL			
MODEL NUMBER	WT. Lbs	DESCRIPTION	CAST IRON (-50)
F1792	11.75	2" OUTLET	$ 1400.00
F1793	12.25	3" OUTLET	$ 1485.00
F1794	12.75	4" OUTLET	$ 1915.00
F1796	13.00	6" OUTLET	$ 1974.00

BODY HEIGHT			
PIPE SIZE	NO HUB (STANDARD)	PUSH ON (P)	PVC (-30) ABS (-31)
2" (51)	10" (254)	10 3/8" (263)	10 3/8" (263)
3" (76)	10" (254)	10 3/8" (263)	10 3/8" (263)
4" (102)	10" (254)	10 3/8" (263)	10 3/8" (263)
6" (152)	8 3/4" (222)	-	-

F1790 OPTIONAL VARIATIONS:		
SUFFIX	DESCRIPTION	LIST PRICE
-11	All acid resistant epoxy coated	$ 812.00
-13	All galvanized	$ 812.00
-20	Secondary dome strainer (FS1500-PD)	$ 192.00
-21	Secondary flat strainer (FD-9600 Series)	$ 78.00
-30	PVC socket connection body* (2", 3", 4")	No Add
-31	ABS socket connection body* (2", 3", 4")	No Add
P	Push on connection (2", 3", 4")	

F1810 PLANTING AREA DRAIN

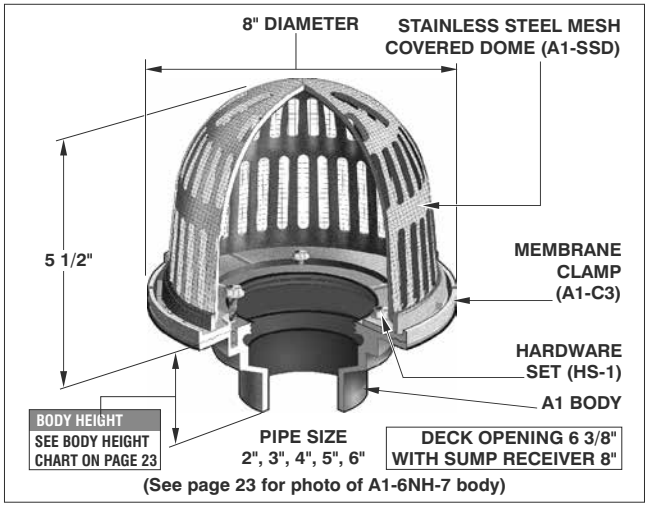

(See page 23 for photo of A1-6NH-7 body)

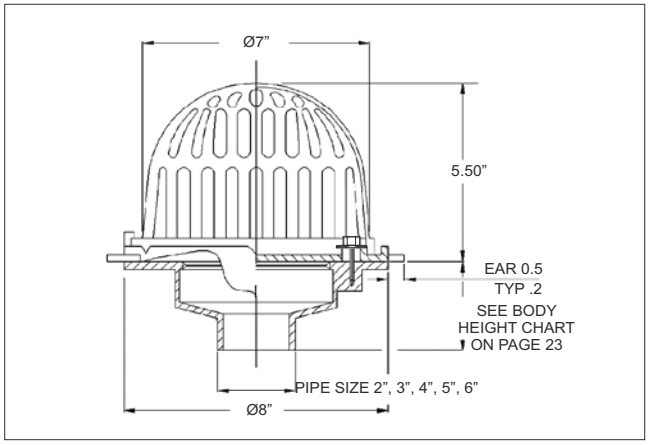

PARTS

A1 BODY	A1-C3	A1-SSD	HS-1

F1810 PLANTING AREA DRAIN

MODEL NUMBER	WT. Lbs	LACQUERED CAST IRON BODY WITH METAL DOME WITH SS MESH SCREEN (-50)
F1812,3,4,6	7.00	$ 1465.00

F1810 OPTIONAL VARIATIONS:

SUFFIX	DESCRIPTION	LIST PRICE	SUFFIX	DESCRIPTION	LIST PRICE
-6	Vandal proof	$ 153.00	-41	Sump receiver (A1-BP)	$ 337.00
-11	All acid resistant epoxy coated	$ 995.00	-81	Rough bronze dome with mesh	$ 459.00
-13	All Galvanized	$ 448.00	-90	Threaded side outlet (2", 3") (4" - **$534.00**) (N/A -30, -31) No Add for -NH	$ 287.00
-30	PVC socket connection body (2", 3", 4")	No Add	P	Push on outlet (2", 3", 4")	No Add
-31	ABS socket connection body (2", 3", 4")	No Add	T	Threaded outlet (2", 3", 4")	$ 107.00
-40	Deck clamp (A1-C3)	$ 196.00	X	Inside caulk outlet (2", 3", 4")	No Add

*** ADD -NH TO -90 FOR NO HUB OUTLET - NO ADD**

F1820 LARGE FREE AREA PLANTING AREA DRAIN

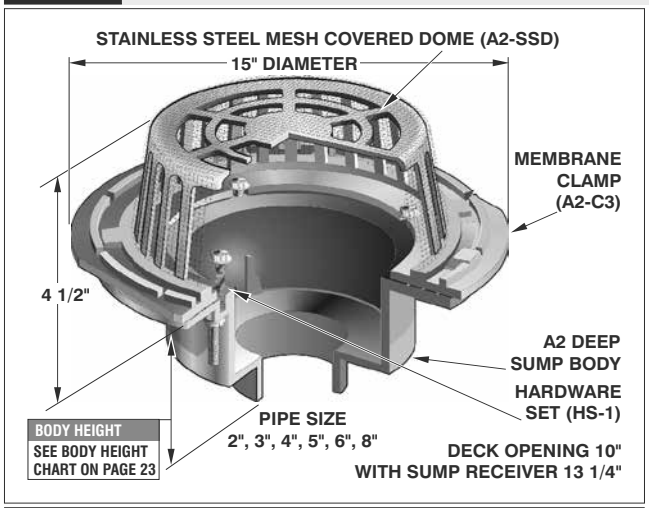

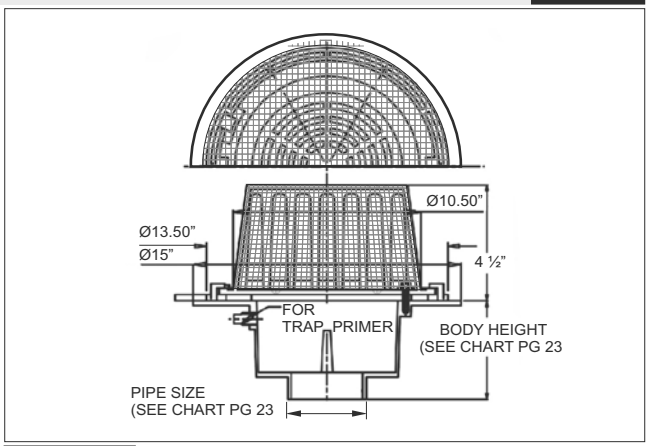

PARTS

A2 BODY	A2-C3	A2-SSD	HS-1

F1820 LARGE FREE AREA PLANTING AREA DRAIN

MODEL NUMBER	WT. Lbs	LACQUERED CAST IRON BODY WITH ALUMINUM DOME WITH SS MESH SCREEN (-4)
F1822,3,4,6,8	31.50	$ 1706.00

F1820 OPTIONAL VARIATIONS:

SUFFIX	DESCRIPTION	LIST PRICE	SUFFIX	DESCRIPTION	LIST PRICE
-6	Vandal proof	$ 164.00	-41	Sump receiver (A2-BP)	$ 356.00
-11	All acid resistant epoxy coated	$ 1764.00	-81	Rough bronze dome with mesh	$ 1722.00
-13	All galvanized	$ 1770.00	-90	Threaded side outlet (2", 3", 4") (N/A -30, -31) No Add for -NH	$ 481.00
-30	PVC socket connection body (2", 3", 4")	No Add	P	Push on outlet (2", 3", 4" or 6")	No Add
-31	ABS socket connection body (2", 3", 4")	No Add	T	Threaded outlet (2", 3", 4", 5" or 6")	$ 107.00
-40	Deck clamp (A2-C3)	$ 319.00	X	Inside caulk outlet (2", 3", 4", 5" or 6")	No Add

*** ADD -NH TO -90 FOR NO HUB OUTLET - NO ADD**

Design and dimensions are subject to modification. Prices do not include applicable taxes. Visit **www.mifab.com** for the most recent product information.
MIFAB®, Inc., 1321 West 119th Street, Chicago, Illinois 60643-5109, USA Toll Free: 1-800-465-2736 • Fax: 1-773-341-3049
All sales subject to MIFAB's® Terms & Warranties. Please refer to inside front cover. sales@mifab.com • Canada Toll Free: 1-800-387-3880

F1830-P PLANTING AREA DRAIN WITH 8" HIGH PERFORATED STANDPIPE & DOME F1830-P

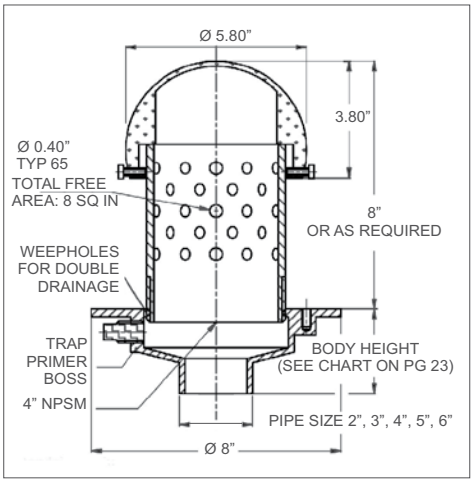

PARTS

F1830-PD-3

W-31-PERF

HS-1

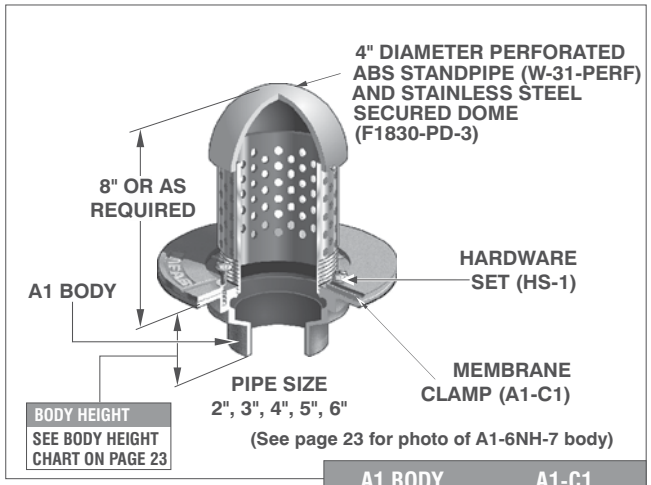

(See page 23 for photo of A1-6NH-7 body)

A1 BODY **A1-C1**

F1830-P PLANTING AREA DRAIN WITH 8" HIGH PERFORATED STANDPIPE AND DOME

MODEL NUMBER	WT. Lbs	STANDPIPE SIZE	LACQUERED CAST IRON BODY & ABS STANDPIPE WITH: STAINLESS STEEL DOME (-3)
F1832,3,4-P	8.50	4" DIA x 6" HIGH	$ 2985.00

F1830-P OPTIONAL VARIATIONS:

SUFFIX	DESCRIPTION	LIST PRICE	SUFFIX	DESCRIPTION	LIST PRICE
-13	All galvanized	$ 259.00	-79	Standpipe over 8", per inch	$ 129.00
-30	PVC socket connection body (2", 3", 4")	No Add	-83	Stainless steel mesh screen around pipe	$ 288.00
-31	ABS socket connection body (2", 3", 4")	No Add	-90	Threaded side outlet (2", 3") (4" - **$534.00**) (N/A -30, -31) No Add for -NH	$ 287.00
-40	Underdeck clamp (A1-C3)	$ 196.00	-92	Stainless steel perforated stand pipe	No Add
-41	Sump receiver (A1-BP)	$ 337.00	P	Push on outlet (2", 3", 4")	No Add
-43	Solid standpipe (W-31)	No Add	T	Threaded outlet (2", 3", 4")	$ 107.00
			X	Inside caulk outlet (2", 3", 4")	No Add

F1830-PL LARGE PLANTING AREA DRAIN WITH 8" HIGH PERFORATED STANDPIPE & DOME F1830-PL

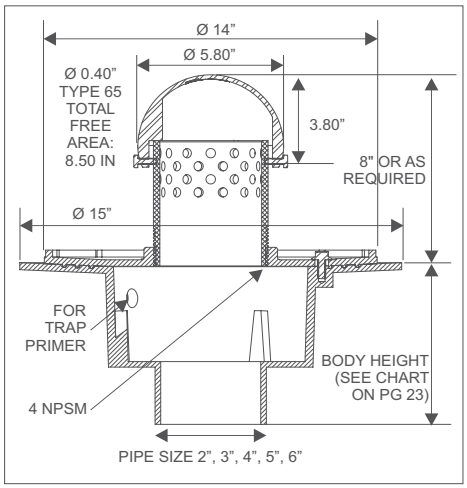

PARTS

F1830-PD-3

W-31-PERF

HS-1

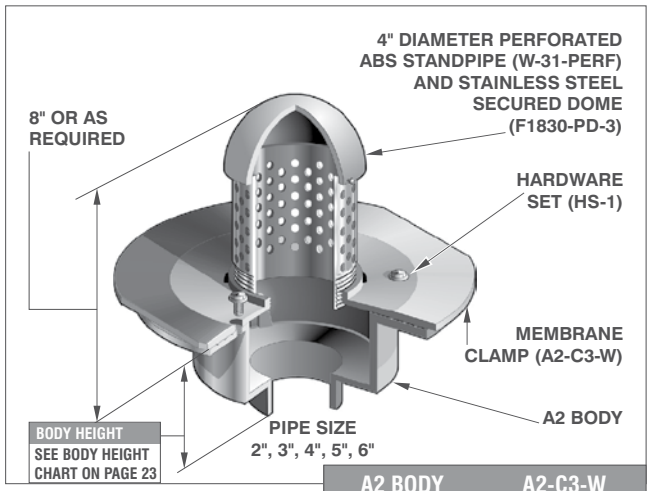

A2 BODY **A2-C3-W**

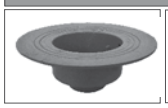

F1830-PL LARGE PLANTING AREA DRAIN WITH 8" HIGH PERFORATED STANDPIPE & DOME

MODEL NUMBER	WT. Lbs	STANDPIPE SIZE	LACQUERED CAST IRON BODY WITH ABS STANDPIPE WITH: STAINLESS STEEL DOME (-3)
F1832,3,4-PL	18.00	4" DIA x 6" HIGH	$ 3561.00

F1830-PL OPTIONAL VARIATIONS:

SUFFIX	DESCRIPTION	LIST PRICE	SUFFIX	DESCRIPTION	LIST PRICE
-13	All galvanized	$ 836.00	-79	Standpipe over 8", per inch	$ 298.00
-30	PVC socket connection body (2", 3", 4")	No Add	-83	Stainless steel mesh screen around pipe	$ 479.00
-31	ABS socket connection body (2", 3", 4")	No Add	-90	Threaded side outlet (2", 3", 4") (N/A -30, -31) No Add for -NH	$ 481.00
-40	Deck clamp (A2-C3)	$ 319.00	-92	Stainless steel perforated stand pipe	No Add
-41	Sump receiver (A2-BP)	$ 356.00	P	Push on outlet (2", 3", 4" or 6")	No Add
-43	Solid standpipe (W-31)	No Add	T	Threaded outlet (2", 3", 4", 5" or 6")	$ 107.00
			X	Inside caulk outlet (2", 3", 4", 5" or 6")	No Add

F1840 PLANTING AREA DRAIN W/9" ADJUSTABLE TRACTOR GRATE W/STAINLESS STEEL BALLAST GUARD F1840

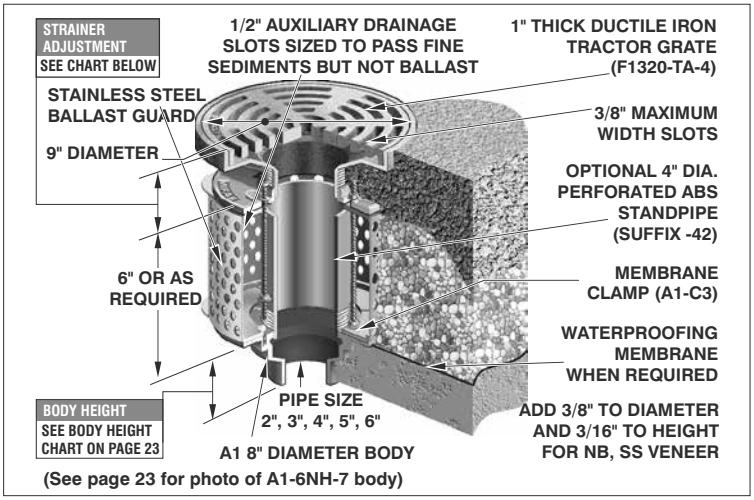

(See page 23 for photo of A1-6NH-7 body)

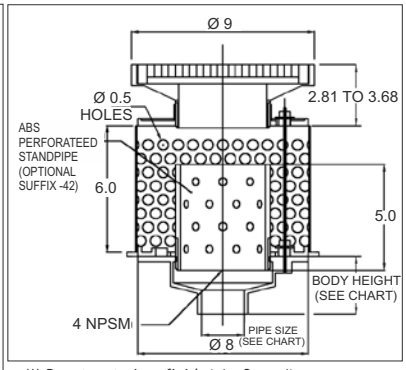

(*) Denotes strainer finish (-1, -3 or -4)

F1320-TA(*)

A1-C2

HS-3

PARTS

A1 BODY	A1-C3	W-31	A1-BG

F1840 PLANTING AREA DRAIN WITH 9" ADJUSTABLE TRACTOR GRATE WITH STAINLESS STEEL BALLAST GUARD					
MODEL NUMBER	WT. Lbs	STANDPIPE DIAMETER	LACQUERED CAST IRON BODY WITH: DUCTILE IRON (-4)	NICKEL BRONZE (-1)	STAINLESS STEEL (VENEER) (-3)
F1842,3,4,6	25.00	4"	$ 5185.00	$ 5502.00	$ 5502.00

STRAINER ADJUSTMENT		
STRAINER	MIN	MAX
9" DIA.	1 3/4"	2 5/8"

ANSI/ASME RATING		
STRAINER	FREE AREA	LOAD RATING
F1320-TA-4	18.0 IN²	OVER 10,000 lbs

F1840 OPTIONAL VARIATIONS:		
SUFFIX	DESCRIPTION	LIST PRICE
-42	Perforated standpipe(W-31-PERF)	No Add
-AR	Ballast guard other than 6"	$ 1175.00

F1860 F1870 12" and 16" SQUARE OPEN HOPPER DRAIN W/LOOSE SET BOTTOM GRATE

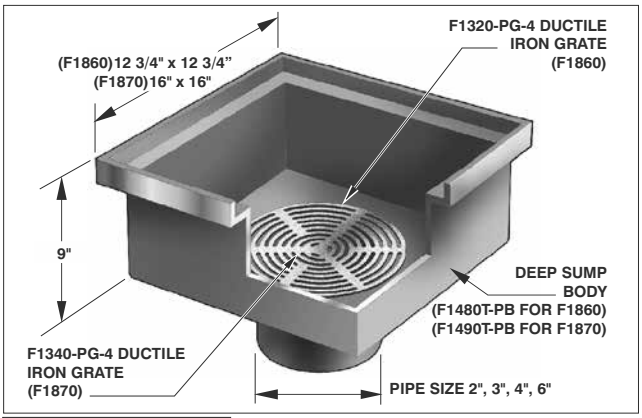

F1860+F1870 PARTS (*) DENOTES STRAINER FINISH (-1, -3 OR -4)

A3-PG	A1 BODY	F1480T-PB BODY (F1860) F1490T-PB BODY (F1870)	F1320-PG-(*) (F1860) F1340-PG-(*) (F1870)

F1860 12"/F1870 16" SQUARE OPEN HOPPER DRAIN WITH LOOSE SET BOTTOM GRATE				
MODEL NUMBER	WT. Lbs	LACQUERED CAST IRON BODY WITH: DUCTILE IRON (-4)	STAINLESS STEEL (VENEER) (-3)	NICKEL BRONZE (-1)
F1862,3,4	25.00	$ 1098.00	$ 2144.00	$ 2144.00
F1872,3,4,6	30.00	$ 2103.00	$ 4133.00	$ 4133.00

F1860 and F1870 OPTIONAL VARIATIONS:			
SUFFIX	DESCRIPTION	F1860	F1870
-5	Sediment bucket	$ 317.00	$ 765.00
-11	All acid resistant epoxy coated	$ 969.00	$ 1381.00
-13	All galvanized	$ 741.00	$ 1381.00
-16-4	DI floor level square grate	$ 255.00	$ 733.00
-16-1	NB floor level square grate (veneer)	$ 759.00	$ 2308.00
-16-3	SS floor level square grate (veneer)	$ 759.00	$ 2308.00
-21	Secondary flat strainer (FD-9600 Series)	$ 78.00	$ 78.00
-FL	Anchor flange	$ 481.00	$ 481.00
-FLC	Anchor flange & membrane clamp	$ 927.00	$ 1214.00

F1880 / F1890 4" x 8" AND F1890 6" x 12" OPEN SIGHT DRIP DRAINS

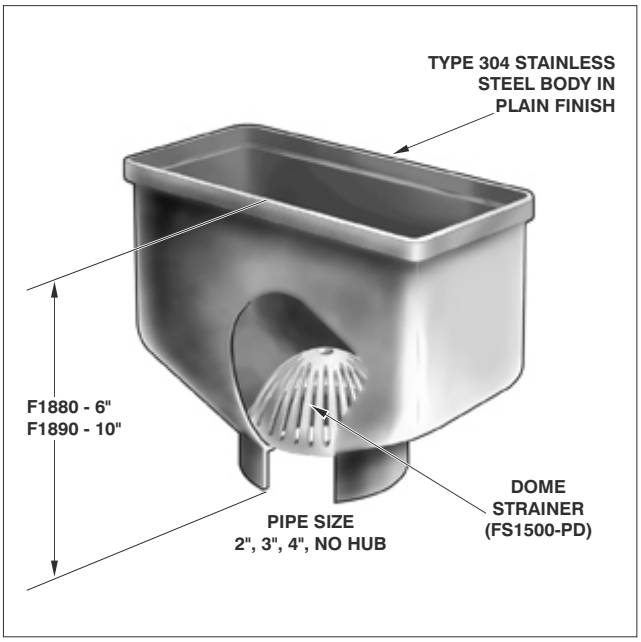

F1880 4" x 8" & F1890 6" X 12" OPEN SIGHT DRAINS			
MODEL NUMBER	WT. Lbs	DESCRIPTION	STAINLESS STEEL (-3)
F1882,3,4,6	13.00	4" x 8"	$ 7052.00
F1892,3,4,6	30.00	6" x 12"	$ 9401.00

F1880, F1890 OPTIONAL VARIATIONS:			
SUFFIX	DESCRIPTION	F1880	F1890
-21	Secondary flat strainer (FD-9600 Series)	$ 78.00	$ 78.00
-34	Closure plug (C1440 Series)	$ 477.00	$ 477.00
-34B	Bronze closure plug	$ 942.00	$ 942.00
-FL	Anchor flange	$ 942.00	$ 1529.00
-FLC	Anchor flange & membrane clamp	$1175.00	$ 1646.00
T	Threaded connection (2", 3" 4")	$ 107.00	$ 107.00
X	Inside caulk outlet (2", 3" 4")	No Add	No Add

Design and dimensions are subject to modification. Prices do not include applicable taxes. Visit **www.mifab.com** for the most recent product information.
MIFAB®, Inc., 1321 West 119th Street, Chicago, Illinois 60643-5109, USA Toll Free: 1-800-465-2736 • Fax: 1-773-341-3049
All sales subject to MIFAB's® Terms & Warranties. Please refer to inside front cover. sales@mifab.com • Canada Toll Free: 1-800-387-3880

F1900 FLOOR DRAIN INSTALLATION STABILIZING PLATE - FOR A1 BODIES F1900

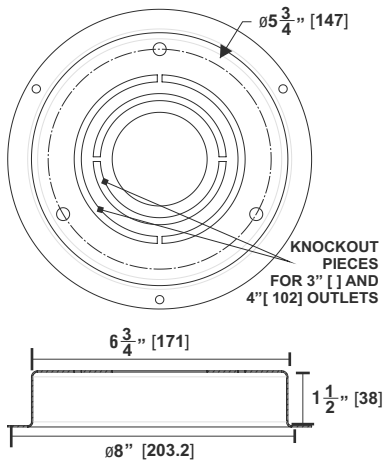

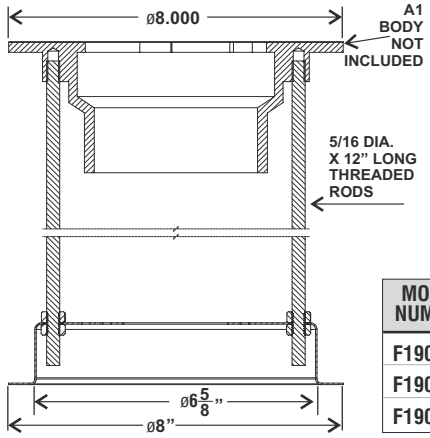

MODEL NUMBER	PIPE SIZE	PIPE OPENING DIAMETER	LIST PRICE
F1902	2"	2 9/16"	$ 201.00
F1903	3"	3 11/16"	$ 201.00
F1904	4"	4 11/16"	$ 201.00

Description: MIFAB F1900 Series of drain installation stabilization plate. They are manufactured from 16 gauge galvanized steel and painted with an acid resistant red epoxy coating. The plates are made with a variable pipe opening, three support stud holes and three nail holes. They can be used with MIFAB's 2", 3" or 4" A1 bodies.

F1910 FLOOR DRAIN INSTALLATION STABILIZING PLATE WITH FLANGE - FOR A1 BODIES F1910

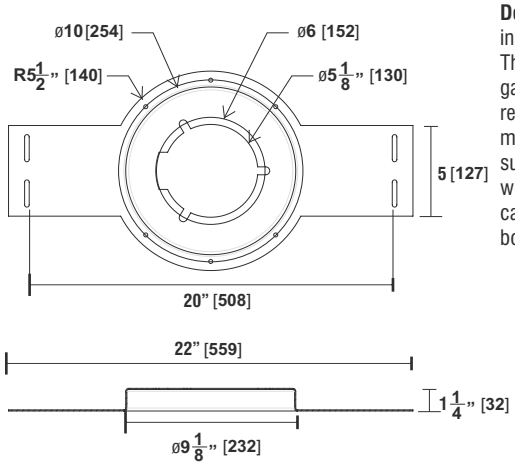

Description: MIFAB F1910 Series of drain installation stabilization plate with flange. They are manufactured from 16 gauge galvanized steel and painted with an acid resistant red epoxy coating. The plates are made with a variable pipe opening, four support stud holes, six nail holes and a wide flange for securing to decks. They can be used with MIFAB's 2", 3" or 4" A1 bodies.

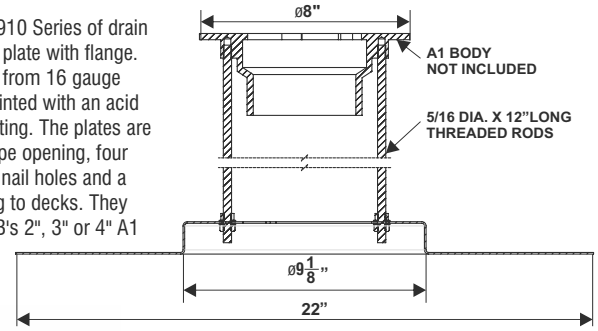

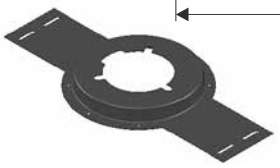

MODEL NUMBER	PIPE SIZE	PIPE OPENING DIAMETER	LIST PRICE
F1912	2"	2 9/16"	$ 267.00
F1913	3"	3 11/16"	$ 267.00
F1914	4"	4 11/16"	$ 267.00

F1920 FLOOR DRAIN INSTALLATION STABILIZING PLATE - FOR A2 BODIES F1920

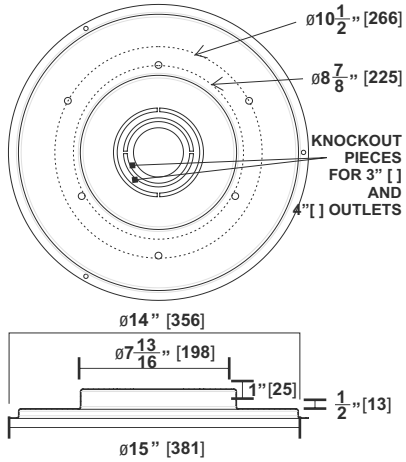

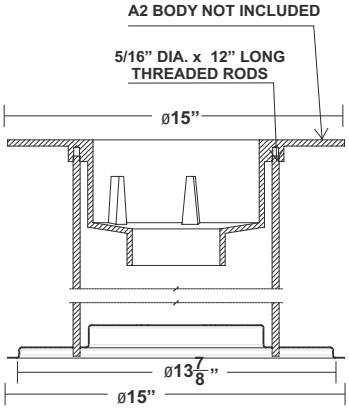

MODEL NUMBER	PIPE SIZE	PIPE OPENING DIAMETER	LIST PRICE
F1922	2"	2 9/16"	$ 215.00
F1923	3"	3 11/16"	$ 215.00
F1924	4"	4 11/16"	$ 215.00

Description: MIFAB F1920 Series of drain installation stabilization plate. They are manufactured from 16 gauge galvanized steel and painted with an acid resistant red epoxy coating. The plates are made with a variable pipe opening, six support stud holes and three nail holes. They can be used with MIFAB's 2", 3" or 4" A2 bodies.

F1100-C-4POD PLANTER PODIUM DRAIN

Specification: MIFAB® Series F1100-C-4POD (* specify strainer diameter) lacquered cast iron floor drain with anchor flange, high rough in membrane clamp, extension body, drain body clamp and strainer (specify -1 for nickel bronze, -3 for stainless steel) with vandal resistant stainless steel allen key screws.

Function: Typically used in planters which are integrated into various locations across the podium. Planters require a secondary concrete pour - over the podium's primary drainage membrane. MIFAB's system allows the use of a second drain body to properly drain and waterproof the interior of the planter.

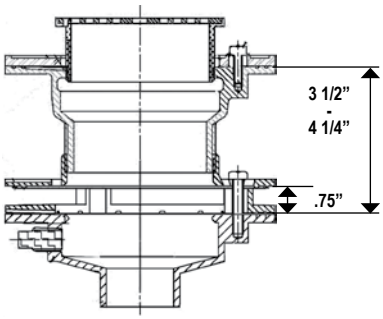

F1100 Series meets ANSI/ASME Floor Drain Standard A112.6.3-2001

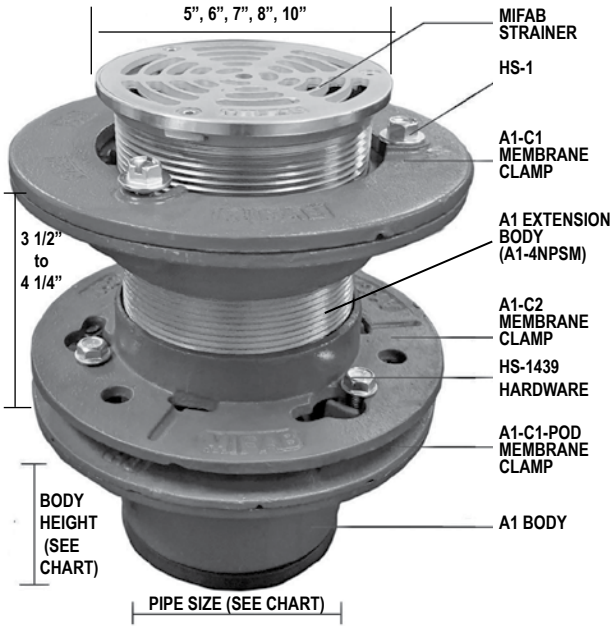

STRAINER SIZE	ANSI/ASME RATING			PIPE SIZE	BODY HEIGHT					LIST PRICE (-1 or -3)
	FREE AREA	LOAD RATING			NO HUB (STANDARD)	PUSH ON (P)	THREADED (T)	INSIDE CAULK (X)	PVC/ABS (-30)/(-31)	
		N.B. (-1) Lbs.	S.S. (-3) Lbs.							
5" (127)	8 in² (5200²)	Up To 2000	5000 to 7499	2" (51)	3" (76)	3 3/8" (86)	2 1/4" (57)	3 3/4" (95)	2 15/16" (75)	**$1,430.00**
6" (152)	9 in² (5800²)	Up To 2000	-	3" (76)	3" (76)	3 3/8" (86)	2 5/8" (67)	3 3/4" (95)	3 3/4" (95)	**$1,570.00**
7"(177)	12 in² (7700²)	Up To 2000	-	4" (102)	3" (76)	3 3/8" (86)	2 5/8" (67)	3 3/4" (95)	3 3/4" (95)	**$1,685.00**
8"(203)	18 in² (16000²)	Up To 2000	-	5" (127)	3" (76)	-	2 5/8" (67)	3 3/4" (95)	-	**$1,909.00**
10"(254)	26 in² (17170²)	Up To 2000	-	6" (152)	3 1/4" (83)	6 1/2" (165)	-	-	-	**$2,306.00**

F1100-C-4POD and F1100-C-PLA OPTIONAL VARIATIONS:

SUFFIX	DESCRIPTION	LIST PRICE
-1	Nickel Bronze Strainer	**No Add**
-3	Type 304 Stainless Steel Strainer	**No Add**
-4	Ductile Iron Strainer	**No Add**
-5	Sediment bucket (A1-PB)	**$ 144.00**
-6	Security screws (TR25 Torx and pin) (H-1039A)	**$ 79.00**
-7	Trap seal primer tapping	**Standard**
-7MG	MI-GARD, Floor Drain Trap Seal	**See TSP book**
-8	Backwater valve (BV1250 Series) (2", 3", 4")	**$ 497.00**
-10	Decorative polished top	**$ 221.00**
-11	Acid resistant epoxy coated body (and clamp if needed)	**$ 343.00**
-13	Galvanized body (and clamp if needed)	**$ 259.00**
-15	Extension (DD-50)	**$ 185.00**
-21	Secondary flat strainer (FD-9600 Series)	**$ 78.00**
-28	Stainless Steel Body (Type 304) (2", 3", 4" No Hub only)	**$ 1581.00**
-30	PVC Socket Connection Body* (2", 3", 4")	**No Add**
-31	ABS Socket Connection Body* (2", 3", 4")	**No Add**
-34	Closure plug (C1440 Series)	**$ 477.00**
-40	Underdeck clamp (A2-C3)	**$ 196.00**
-41	Sump receiver (A2-BP)	**$ 337.00**
-49	Chrome plated strainer assembly (add to -1 only)	**$ 59.00**
-69	Stainless steel sediment bucket (A1-SSB)	**$ 279.00**
-84	Stainless Steel mesh screen around standpipe	**$ 534.00**
-90	Threaded side outlet (2", 3") (N/A -30, -31) No Add for -NH	**$ 287.00**
-90	Threaded side outlet (4") (N/A -30, -31) No Add for -NH	**$ 535.00**
-95	Client logo (-3 only)	**$ 1175.00**
-C2	High rough-in membrane clamp (A1-C2)	**$ 103.00**
-F4-(1,3)	4" NB or SS round funnel	**$ 583.00**
-F4-50	4" cast iron round funnel	**$ 247.00**
-F6-(1,3)	6" NB or SS round funnel	**$ 862.00**
-F6-50	6" cast iron round funnel	**$ 395.00**
-G-(1,3)	4" x 9" NB or SS oval funnel	**$ 1204.00**
-G-50	4" x 9" C.I. oval funnel	**$ 583.00**
-G(*)H	(*) indicates height of S.S. ballast guard required.	**$ 150.00/inch**
-HP	Heel Proof grate 1/4" wide slots	**No Add**
-J-(1,3)	3" x 1" NB or SS oval funnel	**$ 607.00**
-J-50	3" x 1" cast iron oval funnel	**$ 276.00**
P	Push on outlet (2", 3" or 4")	**No Add**
-P(*)L	(*) Indicates length of PVC standpipe required	**$ 101.00**
T	Threaded outlet (2", 3" or 4")	**$ 107.00**
-Z	Extended wide elastomeric flange on top (use Z5 or ZS top)	**$ 1724.00**
X	Inside caulk outlet (2", 3", or 4")	**No Add**
5	5" no hub outlet	**$ 707.00**
5T	5" threaded outlet	**$ 707.00**
5X	5" inside caulk outlet	**$ 707.00**
6	6" no hub outlet	**$ 707.00**
6P	6" push on outlet*	**$ 707.00**

Design and dimensions are subject to modification. Prices do not include applicable taxes. Visit **www.mifab.com** for the most recent product information.

MIFAB®, Inc., 1321 West 119th Street, Chicago, Illinois 60643-5109, USA
Toll Free: 1-800-465-2736 • Fax: 1-773-341-3049
sales@mifab.com • Canada Toll Free: 1-800-387-3880

All sales subject to MIFAB's® Terms & Warranties. Please refer to inside front cover.

MIFAB's podium drains are ideal for two pour concrete installations in podium decks, terraces and balconies.

MIFAB offers a number of podium drain solutions for different types of applications. Contractors have told us that installing floor drains within a podium system is not easy because of the need to properly accommodate the 3/4" drain board that is typically installed underneath the pavers in podiums. The unique MIFAB podium drain solution allows for full flow of water off the drain board into the sump of the drain body. It also properly secures the water-proofing membrane around the entire body - providing 100% clamping around the drain opening. MIFAB offers podium drain solutions for the following applications:

1) drain installed at grade level or underneath the podium pavers (F1100-C-4POD),
2) drain installed at grade level or underneath the pavers in a secondary pour installation (F1100-C-4POD),
3) drain installed at grade level in a planter area - with an adjustable standpipe to accommodate depth of the planter (F1100-C-PLA),

The bottom drain in the assembly has a modified clamping collar which has extra weep holes; in addition to protruding prongs on the top to create a ¾" gap. The drain board is inserted into this ¾" gap and eliminates the drain board butting up to the standpipe; blocking water drainage. Ponding and mildew can result when the water is not able to drain due to the drain board blocking the weepholes.

The second drain body has a 4" NPSM thread on the outlet to allow vertical adjustment of the second drain body relative to the height of the concrete pour. The strainer can also be adjusted to meet the finished floor height. A second water proofing membrane clamp is provided on top of the second drain body to secure the membrane during the second pour.

The threads machined into the top of the drain bodies are 4" NPSM. These industry standard threads enable one to easily screw a piece of 4" male threaded PVC (or other material) standpipe into the top of either the first or second drain body to accommodate installation requirements.

If there isn't a standpipe used, the below illustration is another possible installation method (F1100-C-POD).

The second drain body with the 4" male NPSM threads is not used. The elevated A1-C1-POD water proofing membrane clamp with the ¾" vertical gap receives the drain board for efficient drainage.

F1100-C-POD

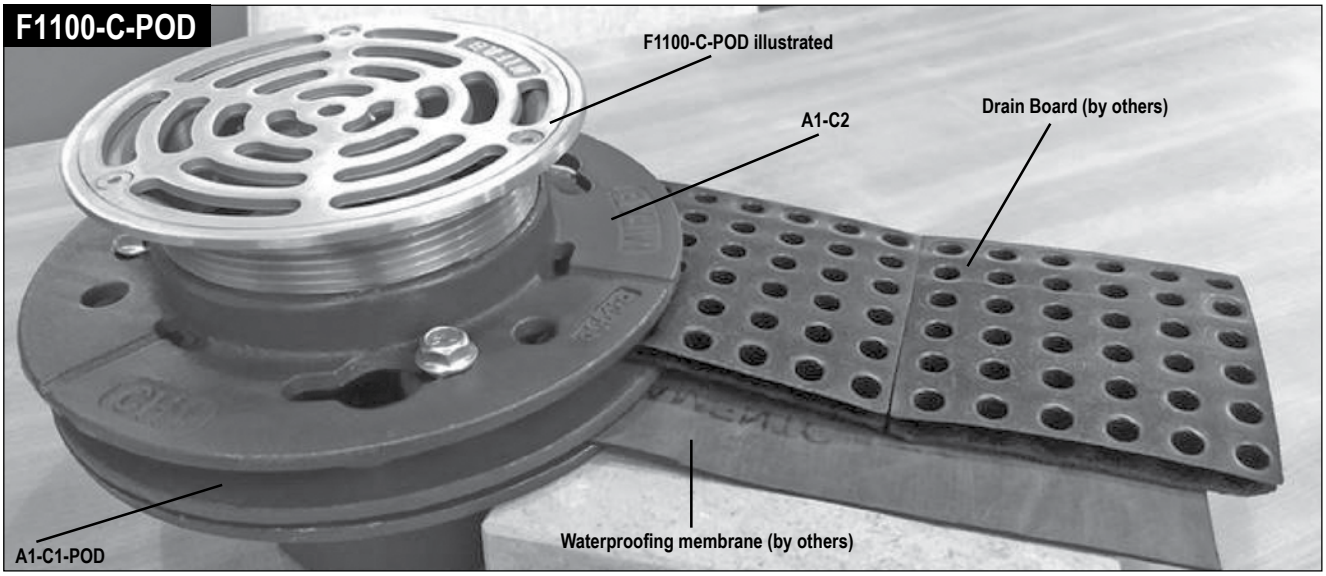

STRAINER SIZE	LIST PRICE (-1, -3)
5"	$864.00
6"	$1005.00
7"	$1120.00
8"	$1343.00
10"	$1740.00

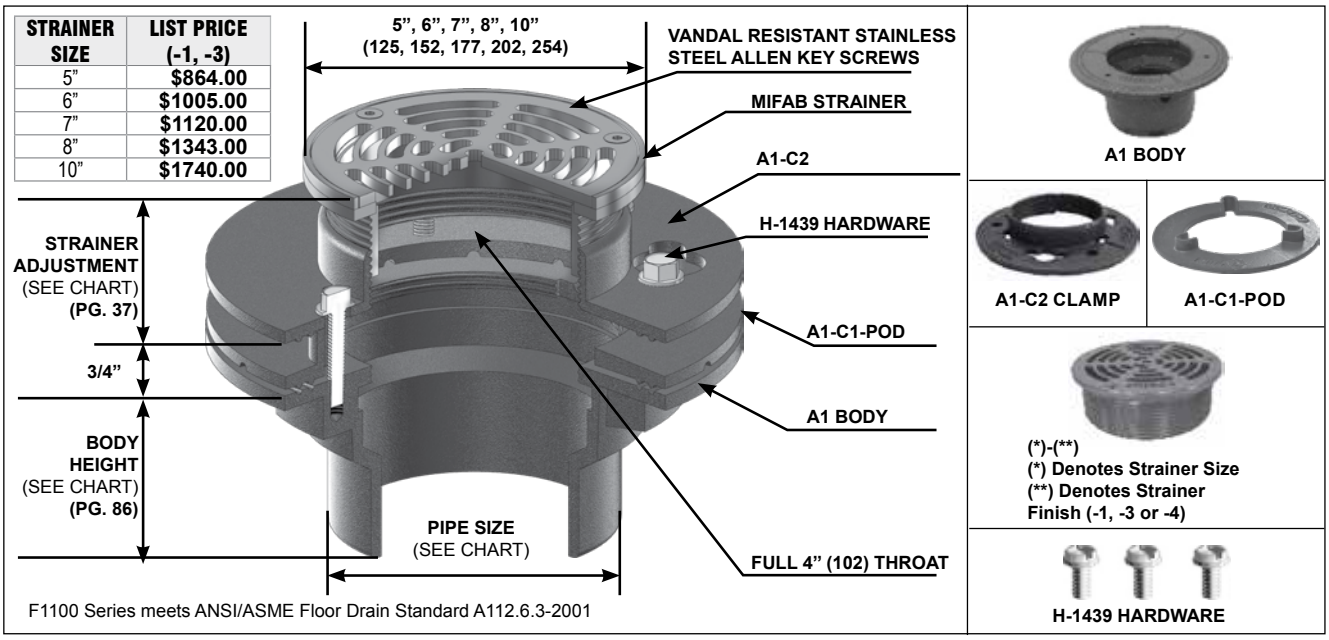

F1100 Series meets ANSI/ASME Floor Drain Standard A112.6.3-2001

F1100-C-PLA

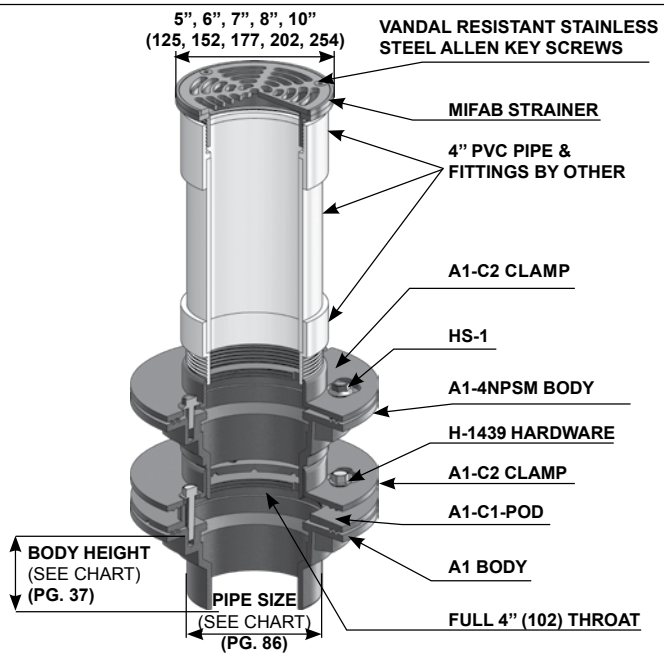

F1100-C-PLA (PLANTER PODIUM SYSTEM)

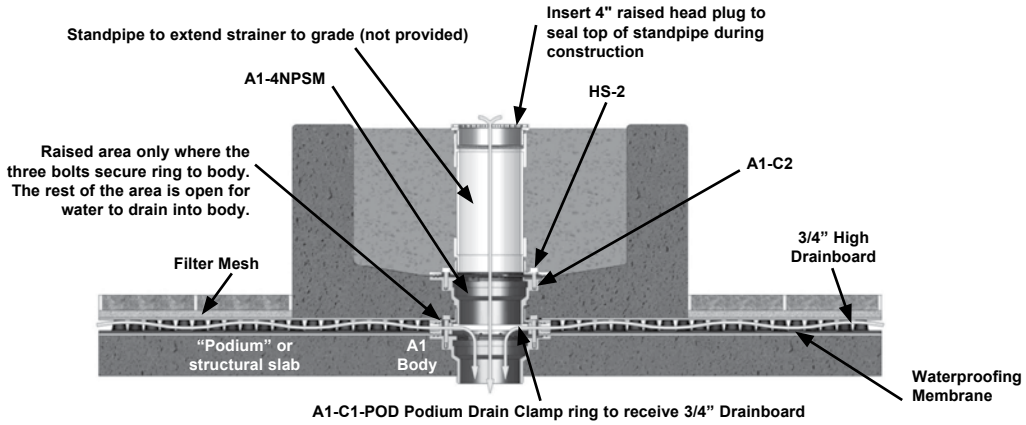

MIFAB's podium system allows full unrestricted drain flow of water off the drain board into the sump of the drain body while properly securing the membrane around the entire body (not just at some anchor points) – providing 100% clamping of the membrane around the drain opening. The installer typically has the option of trimming out the strainer to fnish grade or below the pavers per the illustration below.

F1100-C-POD (PAVER PODIUM SYSTEM)

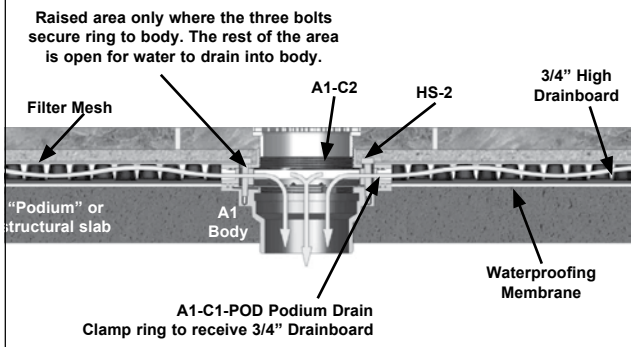

F1100-C-POD (BELOW PAVER PODIUM SYSTEM)

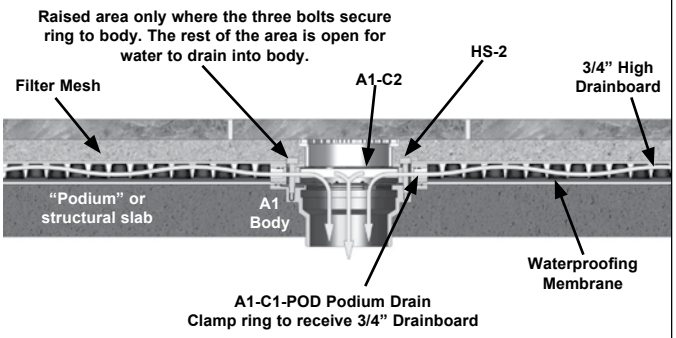

Note: This is the typical installation for the below paver podium system. Check with contractor for installation required for each jobsite.

Design and dimensions are subject to modification. Prices do not include applicable taxes. Visit **www.mifab.com** for the most recent product information.
MIFAB®, Inc., 1321 West 119th Street, Chicago, Illinois 60643-5109, USA
Toll Free: 1-800-465-2736 • Fax: 1-773-341-3049
sales@mifab.com • Canada Toll Free: 1-800-387-3880
All sales subject to MIFAB's® Terms & Warranties. Please refer to inside front cover.

F1000-C-LR FLOOR DRAIN WITH HEAVY DUTY STAINLESS STEEL LIGATURE RESISTANT STRAINER

Function: Used in security areas that have water proof membrane application. Unique strainer design limits the ability for picking, tying-off and hiding contraband. Round, adjustable stainless steel strainer is used for all types of finished floors.

STRAINER DIAMETER	BODY HEIGHT				
	NO HUB (STANDARD	PUSH ON (P)	THREADED (T)	INSIDE CAULK (X)	PVC/ABS (-30)/(-31)
2" (51)	3" (76)	3 3/8" (86)	2 1/4" (57)	3 3/4" (95)	2 15/16" (75)
3" (76)	3" (76)	3 3/8" (86)	2 5/8" (67)	3 3/4" (95)	3 3/4" (95)
4" (102)	3" (76)	3 3/8" (86)	2 5/8" (67)	3 3/4" (95)	3 3/4" (95)
5" (127)	3" (76)	--	2 5/8" (67)	3 3/4" (95)	--
6" (152)	3 1/4" (83)	6 1/2" (165)	--	--	--

(DIMENSION) DENOTES MILLIMETRES

STRAINER DIAMETER	STRAINER ADJUSTMENT		ANSI/ASME RATING		List Price (-3)
	MIN	MAX	FREE AREA	LOAD RATING LBS. S.S. (-3)	
5" (127)	1/2" (38)	1 1/2" (38)	1.80 in²	5000 To 7499	**$803.00**
6" (152)	11/16" (17)	1 1/2" (38)	2.50 in²	5000 To 7499	**$933.00**

PARTS

A1 BODY

(*) -3
(*) Denotes Strainer Size

A1-C1

HS-1

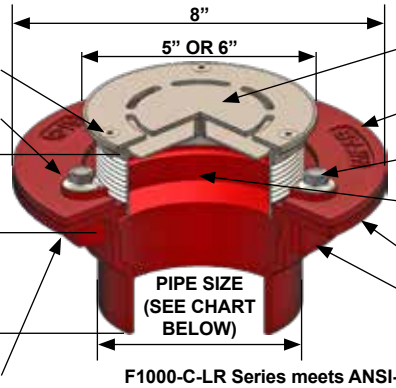

F1000-C-LR Series meets ANSI-ASME floor drain standard A112.6.3-2001

F1000-C-LR and F1000-C-S-LR OPTIONAL VARIATIONS:

SUFFIX	DESCRIPTION	LIST PRICE
-5	Sediment bucket	$ 144.00
-6	Security screws (T-20 Torx & pin)	$ 79.00
-7	1/2" trap seal primer connection	Standard
-7MG	MI-GARD, Floor Drain Trap Seal	See TSP book
-8	Backwater valve (2", 3", 4")	497.00
-11	Acid resistant epoxy coated body	$ 343.00
-13	Galvanized body	$ 259.00
-15	Extension	$ 185.00
-21	Secondary flat stainless steel strainer (2", 3", 4")	$ 78.00
-28	Stainless steel body (Type 304)	$ 1581.00
-30	PVC socket connection body	No Add
-31	ABS socket connection body	No Add
-34	Closure plug	$ 477.00
-40	Sump receiver	$ 196.00
-41	Underdeck clamp	$ 337.00
-90	Threaded side outlet (2", 3", 4")	$ 287.00
-90NH	No hub side outlet (2", 3", 4")	$ 535.00
-95	Client logo	$ 1175.00
-C2	High rough-in membrane clamp (min. 1 9/16" (40)	$ 103.00
-F4-3	4" Round funnel	$ 583.00
-F6-3	6" Round funnel	$ 862.00
-G-3	Oval 4" x 9" funnel	$ 1204.00
-J-3	6" x 3" x 1" funnel	$ 607.00
P	Push on outlet	No Add
T	Threaded outlet (2", 3", 4")	$ 107.00
X	Inside caulk outlet	No Add
-Z	Extended wide elastomeric flange	$1724.00

F1000-C-S-LR FLOOR DRAIN WITH HEAVY DUTY SQUARE STAINLESS STEEL LIGATURE RESISTANT STRAINER

Function: Used in security areas that have water proof membrane application. Unique strainer design limits the ability for picking, tying-off and hiding contraband. Square, adjustable stainless steel strainer is used for all types of finished floors.

STRAINER DIAMETER	STRAINER ADJUSTMENT		ANSI/ASME RATING		List Price (-3)
	MIN	MAX	FREE AREA	LOAD RATING LBS. S.S. (-3)	
5"x5" (127)	5/8" (15)	1 9/16" (40)	1.80 in²	5000-7499	**$ 998.00**
6"x6" (152)	7/8" (22)	1 9/16" (40)	2.50 in²	5000-7499	**$ 1086.00**

(DIMENSION) DENOTES MILLIMETRES

PARTS

A1 BODY

(*) -3
(*) Denotes Strainer Size

A1-C1

HS-1

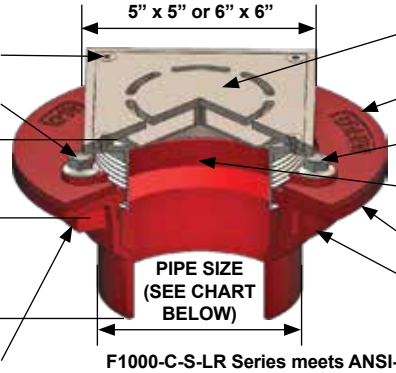

F1000-C-S-LR Series meets ANSI-ASME floor drain standard A112.6.3-2001

T1000-3
4.92" x 20" x 5/8" Grate

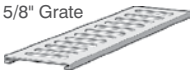

T1000-F-3
5 1/2" x 20" x 3/4" Section

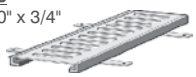

1" x 3/4" x 1/8" Stainless Steel Angle Frame (Suffix -F)

Free area 20 in² per running foot 16 gauge slotted Stainless Steel Grate

T1100-4
4.92" x 20" x 5/8" Grate

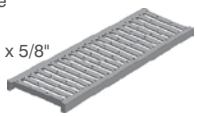

T1100-F-4
5 7/8" x 20" x 3/4" Section

1" x 3/4" x 1/8" Mild Steel Angle Frame (Suffix -F) or S.S. Frame (Suffix -F-3)

Free area 20 in²per running foot Ductile Iron Grate (S.S. Veneer, add (-3)

T1150-4
12" x 12" Grate

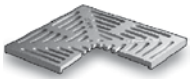

Ductile Iron Grate (-4) Free area 51 in²

T1150-F-4
12 3/8" x 12 3/8" Section

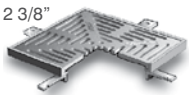

Ductile Iron Grate (-4)
Free area 51 in² 1" x 1" x 1/8" Angle Iron Frame (Suffix -F)

T1150-F2-4
12 1/4" x 24 1/4" Section

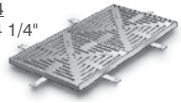

T1200-F2-4
24 3/8" x 24 3/8" Section

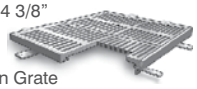

Ductile Iron Grate (Standard) Free area 200 in

T1200-F-4
12 3/8" x 48 3/4"

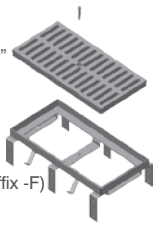

1 3/4" x 1 3/4" x 1/4" Angle Iron Frame (Suffix -F)

T1000 5" x 20" STAINLESS STEEL TRENCH DRAIN GRATE WITH OPTIONAL "F" ANGLE FRAME

MODEL NUMBER	SIZE	GRATE MATERIAL	FRAME MATERIAL	LIST PRICE
T1000-3	5" x 20" grate	Stainless Steel	None	$ 1594.00
T1000-F-3	5 1/2" x 20" section	Stainless Steel	Stainless Steel	$ 2879.00

T1100 5" x 20" TRENCH DRAIN GRATE WITH OPTIONAL "F" ANGLE FRAME

MODEL NUMBER	SIZE	GRATE MATERIAL	FRAME MATERIAL	LIST PRICE
T1100-4	5" x 20" grate	Ductile Iron	None	$ 477.00
T1100-4-3	5" x 20" grate	Ductile Iron, Stainless Steel veneer	None	$ 2022.00
T1100-F-4	5 7/8" x 20" section	Ductile Iron	Steel	$ 1072.00
T1100-F-4-3	6" x 20" section	Ductile Iron, Stainless Steel veneer	Stainless Steel	$ 3390.00

T1000 AND T1100 OPTIONAL VARIATIONS

SUFFIX	DESCRIPTION	LIST PRICE
-6	Vandal proof - per grate (H-1110)	$ 399.00
-11	All acid resistant epoxy coated- per section	$ 815.00
-13	All galvanized - per section	$ 815.00

T1150-(F) 12" x 12" TRENCH DRAIN GRATE WITH OPTIONAL "F" ANGLE FRAME

MODEL NUMBER	SIZE	GRATE MATERIAL	FRAME MATERIAL	LIST PRICE
T1150-4	12" x 12" grate	Ductile Iron	None	$ 477.00
T1150-4-3	12" x 12" grate	Ductile Iron, Stainless Steel veneer	None	$ 1773.00
T1150-F-4	12 1/4" x 12 1/4" section	Ductile Iron	Steel	$ 1283.00
T1150-F2-4	12 1/4" x 24 1/4" section	Ductile Iron	Steel	$ 1981.00
T1150-F-4-3	12 1/4" x 12 1/4" section	Ductile Iron, Stainless Steel veneer	Stainless Steel	$ 3064.00
T1150-F2-4-3	12 1/4" x 24 1/4" section	Ductile Iron, Stainless Steel veneer	Stainless Steel	$ 5540.00

T1150-(F) OPTIONAL VARIATIONS

SUFFIX	DESCRIPTION	LIST PRICE
-6	Vandal proof - per grate (H-1072)	$ 621.00
-11	All acid resistant epoxy coated- per section	$ 756.00
-12	Galvanized grate - per grate	$ 212.00
-13	All galvanized - per section	$ 756.00

T1200-(F) 12" x 24" TRENCH DRAIN GRATE WITH OPTIONAL "F" ANGLE FRAME

MODEL NUMBER	SIZE	GRATE MATERIAL	FRAME MATERIAL	LIST PRICE	ADD FOR 24" EXTENSION
T1200-4	12" x 24" grate	Ductile Iron	None	$ 1164.00	$ 1164.00
T1200-4-3	12" x 24" grate	DI grate W/SS veneer	None	$ 4507.00	$ 4507.00
T1200-F-4	12 1/2" x 24 1/2" section	Ductile Iron	Steel	$ 2578.00	$ 2578.00
T1200-F-4-3	12 3/8" x 24 3/8" section	Ductile Iron, SS veneer	Stainless Steel	$ 7686.00	$ 7686.00

T1200-(F) OPTIONAL VARIATIONS

SUFFIX	DESCRIPTION	LIST PRICE
-6	Vandal proof - per grate (H-1072)	$ 621.00
-11	All acid resistant epoxy coated- per section	$ 1531.00
-13	All galvanized - per section	$ 1531.00
-95	Client logo (-3 SS veneer only) per grate	$ 1175.00

T1200-F2 24 1/2" x 24 1/2" TRENCH DRAIN GRATE AND FRAME ASSEMBLY

MODEL NUMBER	SIZE	GRATE MATERIAL	FRAME MATERIAL	LIST PRICE	ADD FOR 24" EXTENSION
T1200-F2-4	24 1/2" x 24 1/2" section	Ductile Iron	Steel	$ 3632.00	$ 3632.00
T1200-F2-4-3	24 1/2" x 24 1/2" section	DI grate W/SS veneer	Stainless Steel	$ 11,033.00	$ 11,033.00

T1200-F2 OPTIONAL VARIATIONS

SUFFIX	DESCRIPTION	LIST PRICE
-6	Vandal proof - per grate (H-1072)	$ 621.00
-11	All acid resistant epoxy coated - per grate	$ 1369.00
-13	All galvanized - per grate	$ 1802.00
-95	Client logo (-3 SS veneer only) per grate	$ 1175.00

Design and dimensions are subject to modification. Prices do not include applicable taxes. Visit **www.mifab.com** for the most recent product information.

MIFAB®, Inc., 1321 West 119th Street, Chicago, Illinois 60643-5109, USA Toll Free: 1-800-465-2736 • Fax: 1-773-341-3049
All sales subject to MIFAB's® Terms & Warranties. Please refer to inside front cover. sales@mifab.com • Canada Toll Free: 1-800-387-3880

T1320-FL 6 1/8" x 20" CAST IRON TRENCH DRAIN WITH ANCHOR FLANGE T1320-FL

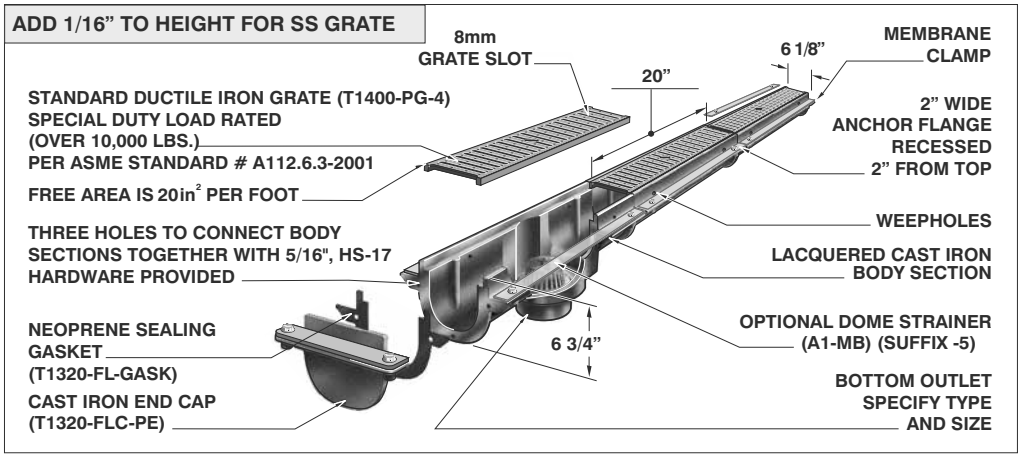

Custom fabricated trench drains are our specialty. Any custom configuration is possible.
See page 92 for order instruction guide.

T1320-FL 6 1/8" x 20" CAST IRON TRENCH DRAIN WITH ANCHOR FLANGE

MODEL NUMBER	SIZE	MATERIAL	FRAME MATERIAL	LIST PRICE PER 20" SECTION
T1322,3,4-FL-4	6 1/8" x 20" section	Cast iron body, DI grate	Cast iron	$ 1744.00 20"/section
T1322,3,4-FL-4-3	6 1/8" x 20" section	Cast iron body, DI grate W/SS veneer	SS veneer	$ 3903.00 20"/section

T1320-FL OPTIONAL VARIATIONS:

SUFFIX	DESCRIPTION	LIST PRICE	SUFFIX	DESCRIPTION	LIST PRICE
-5	Sediment bucket (per piece) (A1-MB)	$ 382.00	-C	Membrane clamp (per 20" section)	$ 208.00
-6	Vandal proof grate (per grate)(TR30 Torx and pin) (H-1109A)	$ 317.00	P	Push on bottom outlet (2", 3" or 4")	No Add
-8	Backwater valve (per piece) (BV1254)	$ 497.00	S	End outlet (4" No hub only)	$ 380.00
-11	All acid resistant epoxy coated (per 20" section)	$ 710.00	T	Threaded bottom outlet (2", 3" or 4")	$ 107.00
-12	Galvanized grate (per 20" section)	$ 704.00	X	Inside caulk bottom outlet (2" or 3")	No Add
-13	All galvanized (per 20" section)	$ 537.00			

ALL TRENCH DRAIN ORDERS REQUIRE A FACTORY DRAWING APPROVED BY THE CUSTOMER PRIOR TO PRODUCTION

T1350-FL 12 1/4" x 12" CAST IRON TRENCH DRAIN WITH ANCHOR FLANGE T1350-FL

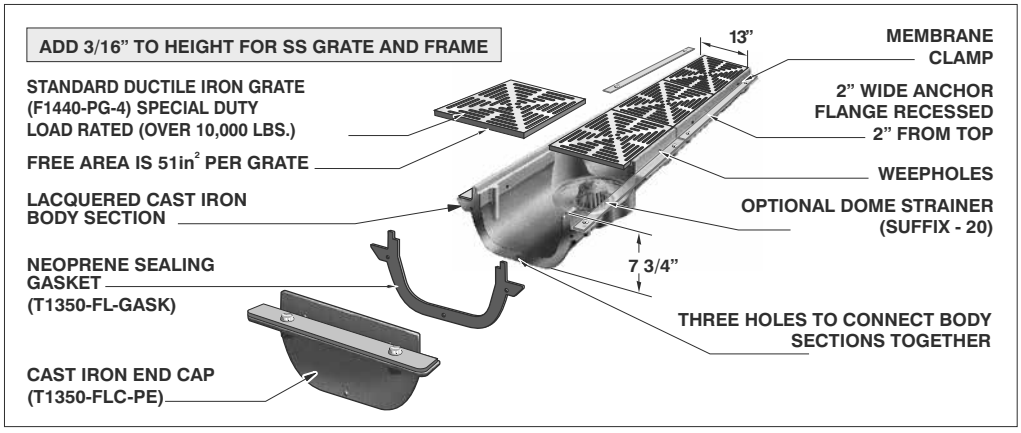

Custom fabricated trench drains are our specialty. Any custom configuration is possible.
See page 92 for order instruction guide.

T1350-FL 12 1/4" x 12" CAST IRON TRENCH DRAIN WITH ANCHOR FLANGE

MODEL NUMBER	SIZE	MATERIAL	FRAME MATERIAL	LIST PRICE PER 12" SECTION
T1352,3,4,6-FL-4	12 1/4" x 12" section	Cast iron body, DI grate	Cast iron	$ 2536.00 /12"section
T1352,3,4,6-FL-4-3	12 1/4" x 12" section	Cast iron body, DI grate W/SS veneer	SS veneer	$ 3969.00 /12"section

T1350-FL OPTIONAL VARIATIONS:

SUFFIX	DESCRIPTION	LIST PRICE	SUFFIX	DESCRIPTION	LIST PRICE
-5	Sediment bucket (per outlet section)	$ 733.00	-20	Dome bottom outlet strainer (per piece)	$ 372.00
-6	Vandal proof grate (per grate) (H-1072B) (lockdown grate to body)	$ 317.00	-95	Client logo (-3 SS veneer only)	$1175.00
			-C	Membrane clamp (per foot)	$ 208.00
-8	Backwater valve (per piece)(BV1254)	$ 497.00	P	Push on bottom outlet (2", 3" or 4")	No Add
-11	All acid resistant epoxy coated (per 12" section)	$ 995.00	S	End outlet (No Hub only, 4")	$ 499.00
-12	Galvanized grate	$ 929.00	T	Threaded bottom outlet (2", 3" or 4")	$ 107.00
-13	All galvanized (per 12" section)	$ 831.00	X	Inside caulk bottom outlet (2" or 3")	No Add

ALL TRENCH DRAIN ORDERS REQUIRE A FACTORY DRAWING APPROVED BY THE CUSTOMER PRIOR TO PRODUCTION

T1320-FL T1320-FL ORDER GUIDE

STEP 1: Determine the total length required. Once total length is known, divide by 20" (each cast iron bod section with grate is 20" long) to determine the total number of cast iron body sections required. Specify the total number of T1320-FLC-PB body sections required.

STEP 2: Determine how many outlet and connection type are required. Are they bottom outlet, (most common) or end outlet? If bottom outlet, specify the total number of T1320T-FLC-PB body sections required. Reduce the total number of body sections required in STEP 1 by the total number of bottom outlet sections required. Remember to add the A3-PG sealing gasket and appropriate A1 body for each bottom outlet required. Remember to add one piece of the T1320-FLC-GASK for every body section and also for every end piece. Remember to add one piece of the HS-17 hardware pack with every body section required.

STEP 3: Specify the total number of end pieces required (Part No: T1320-FLC-PE).

STEP 4: Determine the type and number of grates required.

The number of grates required will equal the total number of body sections required.

ORDER EXAMPLE:

Twenty feet of T1324-FL-4-12SEC trench is required by the customer with one bottom outlet (4", no hub connection) and standard ductile iron grates. Number of body sections required is twelve. One of these body sections will be the outlet body section.

PARTS REQUIRED:

T1320-FLC-PB (T1320-FL-GASK Incl.).....11 pieces
T1320T-FLC-PB (T1320-FL-GASK Incl.) .....1 piece
A1-4NH-7.....1 piece
A3-PG.....1 piece
HS-17 .....13 pieces
T1320-FLC-PE .....2 pieces
T1400-PG-4.....12 pieces
T1400-PGL-STL .....12 pieces
Enter the order into the system by part number and quantity for each.

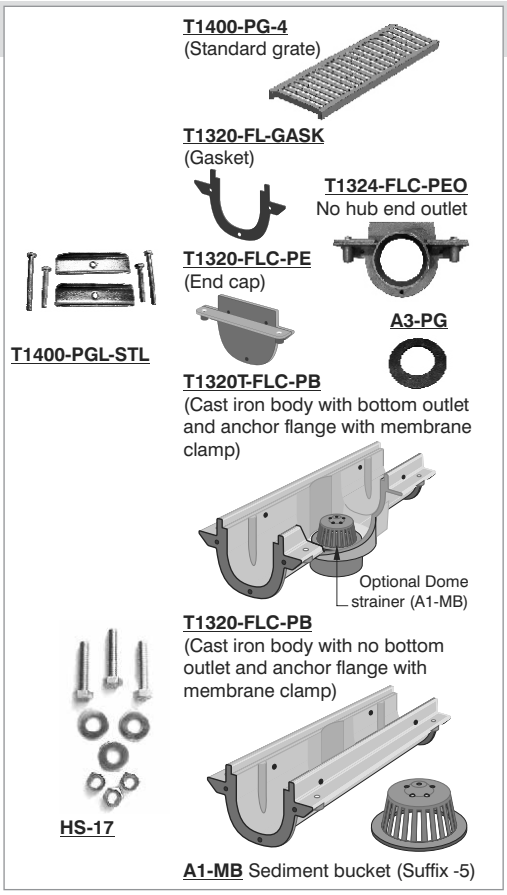

T1350-FL T1350-FL ORDER GUIDE

STEP 1: Determine the total length required. Once total length is known, divide by 12" (each cast iron body section with grate is 12" long) to determine the total number of cast iron body sections required. Specify the total number of T1350-FLC-PB body sections required.

STEP 2: Determine how many outlets and connection types are required. Are they bottom outlet, (most common) or end outlet? If bottom outlet, specify the total number of T1350T-FLC-PB body sections required. Reduce the total number of body sections required in STEP 1 by the total number of bottom outlet sections required. Remember to add the A3-PG sealing gasket and appropriate A1 body for each bottom outlet required.

Remember to add one piece of the T1350-FLC-GASK for every body section and also for every end piece. Remember to add one piece of the HS-17 hardware pack with every body section required.

STEP 3: Specify the total number of end pieces required (Part No: T1350-FLC-PE).

STEP 4: Determine the type and number of grates required.

The number of grates required will equal the total number of body sections required.

ORDER EXAMPLE:

Ten feet of T1354-FL-4-10SEC trench is required by the customer with one bottom outlet (4", no hub connection) and standard ductile iron grates. Number of body sections required is ten. One of these body sections will be the outlet body section.

PARTS REQUIRED:

T1350-FLC-PB (T1350-FL-GASK incl.).....9 pieces
T1350T-FLC-PB(T1350-FL-GASK incl.).....1 piece
A1-4NH-7.....1 piece
A3-PG.....1 piece
HS-17 .....11 pieces
T1350-FLC-PE .....2 pieces
F1440-PG-4.....10 pieces
Enter the order into the system by part number and quantity for each.

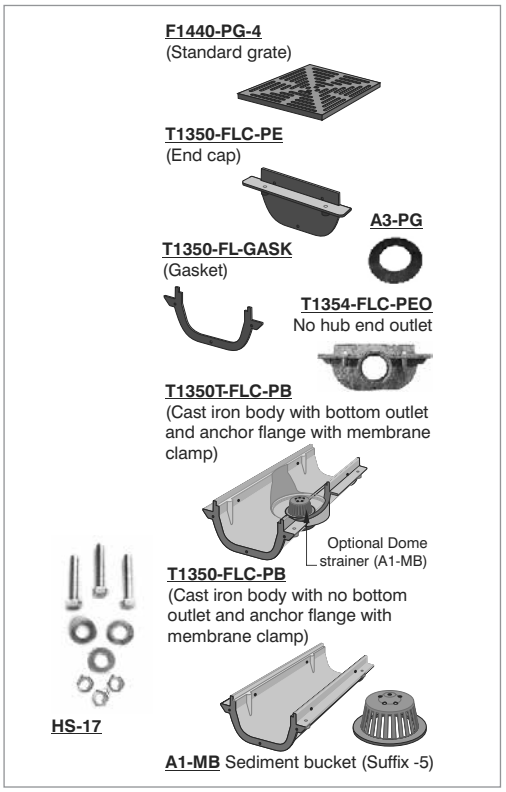

Design and dimensions are subject to modification. Prices do not include applicable taxes. Visit **www.mifab.com** for the most recent product information.
MIFAB®, Inc., 1321 West 119th Street, Chicago, Illinois 60643-5109, USA Toll Free: 1-800-465-2736 • Fax: 1-773-341-3049
All sales subject to MIFAB's® Terms & Warranties. Please refer to inside front cover. sales@mifab.com • Canada Toll Free: 1-800-387-3880

GRATE
Furnished A.R.E.-coated cast iron, stainless steel or nickel bronze. Each is ultimately designed for smooth flow into the drain body. Regularly furnished with a full grate, also available are half grate and three-quarter grates. (See page 98 bottom right corner for MIFAB's unique 3 in 1 nickel bronze and stainless steel floor sink design).

TOP
Available in round or square in a variety of sizes and materials, each of which allows maximum flow, sanitation and serviceability. See individual series for proper selection.

MEMBRANE CLAMP
Provided for applications in finished floors which incorporate a waterproofing membrane. Used to secure the membrane to the drain body, the flashing clamp provides a watertight seal at the drain.

WEEPHOLES
Provided when the body is specified with a flange. Weepholes allow for the drainage of entrapped water which seeps down the outside of the body.

DOME STRAINER
Minimizes splashing as well as preventing debris from entering the drainage lines. The dome also allows for maximum water flow.

BODY
Cast iron with A.R.E. coating inside giving a smooth finish which allows for easy drainage as well as increased sanitation. Easily cleaned because of the smooth finish, the drains are highly functional as well as aesthetically pleasing.

PATENTED 3 IN 1 NICKEL BRONZE (-1) AND STAINLESS STEEL (-3) FLOOR SINK FRAME AND GRATE DESIGN:

Four removable allen keys screws in each quarter section so that one sku can be converted from a full grate to either a half (-150) or three quarter grate (-175)

MIFAB's patented (U.S. patent # 9,458,616) -1 and -3 floor sink frame and grate design is always shipped as a full grate. The installer has the option to remove either one quarter of the grate (to achieve a three quarter grate) or two quarters of the grate (to achieve a half grate). This provides maximum flexibility and choice during the installation process. This frame and grate design is available for the 8" x 8", 12" x 12", 8" round and 12" round floor sinks.

MIFAB® SANITARY FLOOR AREA AND INDIRECT WASTE DRAIN SELECTION GUIDE

Sanitary floor sinks are used to receive surface drainage in areas where sanitation is a priority, such as institutional kitchens and hospitals and to drain indirect waste from various sinks, lavatories, condensate drains and other equipment. In order to specify the correct drain, the specifier must be aware of the floor sink's location and the type of equipment in the area to be served. While the round top will be compatible with most floors, a square top design is available for floor coverings with a square or straight -line pattern. Top sizes are 8" inches for normal usage and 12 inches for larger flow or where a greater free area is required. Stainless steel rims and grates are an excellent choice for traffic areas because of their corrosion-resistant qualities. Drop-in A.R.E. coated cast iron grates are available for non traffic areas.

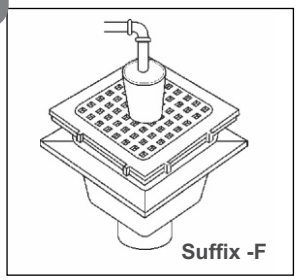
Suffix -F

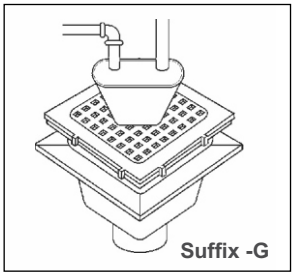
Suffix -G

FUNNELS

Funnels are used to prevent splashing of wastewater while the remaining free area receives surface drainage. A four inch round funnel is used for single drain lines. A six inch round funnel and nine inch oval funnel are used for multiple drain line discharge points. **Specify suffix -F4 for 4" round funnel. Specify suffix -F6 for 6" round funnel. Specify suffix -G for 9" oval funnel.**

BUCKETS

Sediment buckets are used when debris such as peelings, vegetable cuttings, bones, pits and other solid waste kitchen material is to be intercepted and retained. Specify **suffix -5.**

DOME AND INSIDE STRAINER

The regularly furnished dome not only minimizes splashing; it also prevents debris from entering drain lines. The dome also allows maximum water flow. If added protection is needed for the drain, an inside strainer can be specified along with a sediment bucket. **Specify suffix -21.**

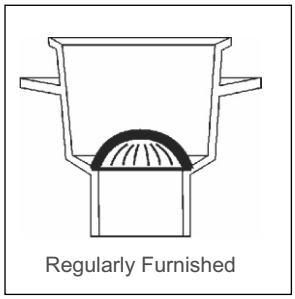
Regularly Furnished

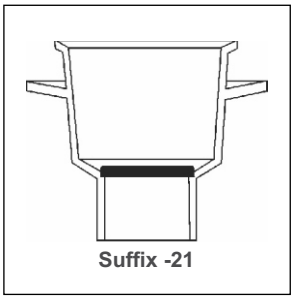
Suffix -21

GRATES AND COVERS

MIFAB sanitary floor sinks are regularly furnished with white A.R.E. coated cast iron grates. For high use areas it is advisable to consider the use of a Nickel Bronze or Stainless Steel frame and grate.

Specify suffix -1 for Nickel Bronze or -3 for Stainless Steel. Note that the -1 and / or -3 frame must be installed on top of the floor sink body before installation because the frame is mounted on top of the floor sink body and cannot be installed on top of the body after the body is installed flush to the floor.

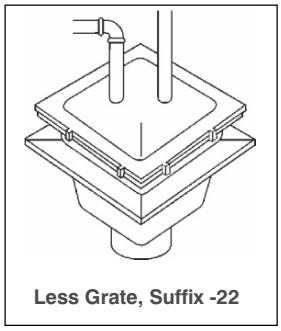
Less Grate, Suffix -22

A grate is not required for floor sinks installed in non traffic areas where indirect waste applications are usually applied. Specify suffix -22 for Less Grate. In areas such as frozen food cases or vegetable or meat cases; part of the floor sink may be covered and part left open to receive waste. Specify suffix -150 for half grate or suffix -175 for three-quarter grate.

MIFAB's patented (U.S. patent # 9,458,616) -1 and -3 floor sink frame and grate design is always shipped as a full grate. The installer has the option to remove either one quarter of the grate (to achieve a three quarter grate) or two quarters of the grate (to achieve a half grate). This provides maximum flexibility and choice during the installation process.

Full Grate

Suffix -150

Suffix -175

Design and dimensions are subject to modification. Prices do not include applicable taxes. Visit **www.mifab.com** for the most recent product information.
MIFAB®, Inc., 1321 West 119th Street, Chicago, Illinois 60643-5109, USA
Toll Free: 1-800-465-2736 • Fax: 1-773-341-3049
sales@mifab.com • Canada Toll Free: 1-800-387-3880
All sales subject to MIFAB's® Terms & Warranties. Please refer to inside front cover.

MIFAB® SANITARY FLOOR AREA AND INDIRECT WASTE DRAIN SELECTION GUIDE

FS1520-175

Sanitary Floor Sink with three quarter grate and dome strainer. Illustrated as installed in finished concrete floor slab on grade.

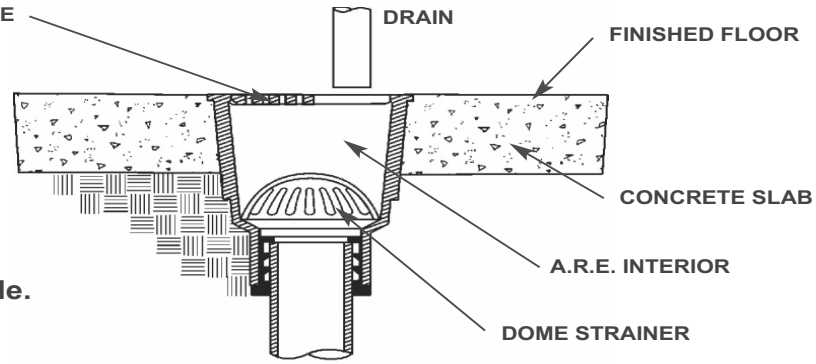

concrete floor slab on grade.

FS1730-FL-C-1

Sanitary Floor Sink with nickel bronze rim and grate, integral flange and dome strainer. Illustrated as installed flush with floor in concrete deck.

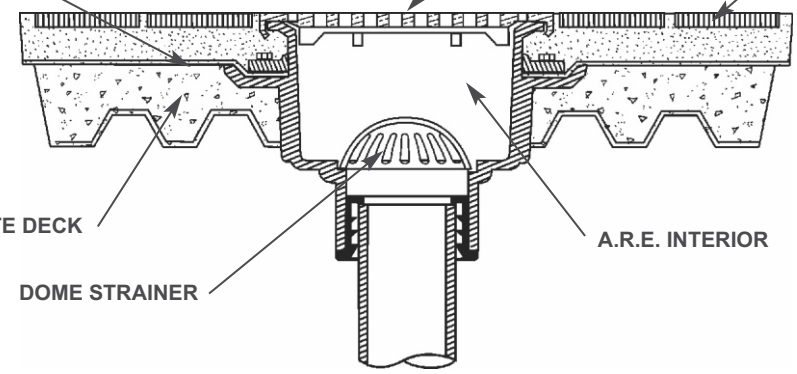

FS1750-22

Sanitary Floor Sink less grate with dome strainer. Illustrated as installed in finished concrete floor slab on grade.

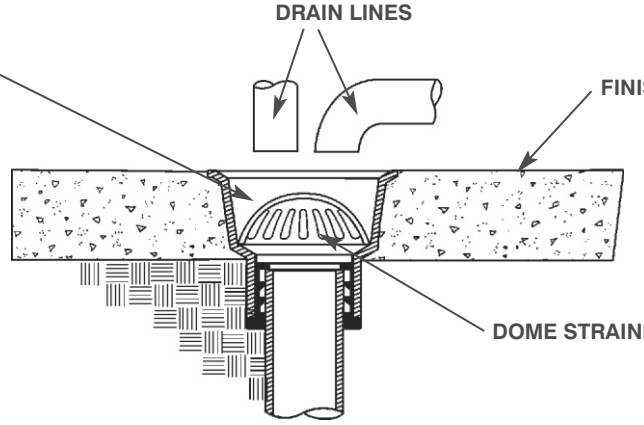

MIFAB® TRANSITION FLOOR SINK INFORMATION

MIFAB offers our Floor Sink bodies with transition outlet connections. Transition outlet floor sink bodies allow the installer to use any A1 body in order to attain the outlet connection size and type required (limited only to the outlet size and type of the A1 bodies). A gasket (part # A3-PG) is installed between the transition floor sink body and the top of the A1 body in order to attain a watertight seal. The A1 body is screwed tightly onto the 4" NPSM male threaded transition connection of the floor sink body. The A1 body has the -7 trap seal primer connection as standard. The height of the transition bodies are increased slightly because of the A1 body. See table below:

How to order in parts: Transition bodies are identified within the MIFAB Kwik Order system by a T after the connection size. **For example:** FS1720TPB (is the transition floor sink body only). A3-PG is the gasket required and the A1 body to stock in components.

How to order an assembled transition floor sink:

Select the required floor sink body size and type and then the applicable connection size and type.

For example: FS1723TBP-FL-150 indicates a 3" push on outlet connection, with anchor flange and half grate.

TOTAL HEIGHT OF TRANSITION BODY (after A1 body is assembled to underside of it with gasket)						
MODEL NUMBER		THREADED (T)	INSIDE CAULK (X)	PVC / ABS (-30, -31)	NO HUB	PUSH ON (P)
FS1520T-PB	2"	8 1/2"	10"	9 1/4"	9 1/4"	9 5/8"
	3"	8 7/8"	10"	9 1/4"	9 1/4"	9 5/8"
	4"	8 7/8"	10"	9 1/4"	9 1/4"	9 5/8"
FS1530T-PB	2"	6 1/2"	8"	7 1/4"	6 1/2"	6 7/8"
	3"	6 7/8"	8"	7 1/4"	6 1/2"	6 7/8"
	4"	6 7/8"	8"	7 1/4"	6 1/2"	6 7/8"
FS1720T-PB	2"	8 1/2"	10"	9 1/4"	8 1/2"	8 7/8"
	3"	8 7/8"	10"	9 1/4"	8 1/2"	8 7/8"
	4"	8 7/8"	10"	9 1/4"	8 1/2"	8 7/8"
FS1730T-PB	2"	10 1/2"	12"	11 1/4"	10 1/2"	10 7/8"
	3"	10 7/8"	12"	11 1/4"	10 1/2"	10 7/8"
	4"	10 7/8"	12"	11 1/4"	10 1/2"	10 7/8"
FS1740T-PB	2"	12 1/2"	14"	13 1/4"	12 1/2"	12 7/8"
	3"	12 7/8"	14"	13 1/4"	12 1/2"	12 7/8"
	4"	12 7/8"	14"	13 1/4"	12 1/2"	12 7/8"
FS1750T-PB	2"	8 1/2"	10"	9 1/4"	8 1/2"	8 7/8"
	3"	8 7/8"	10"	9 1/4"	8 1/2"	8 7/8"
	4"	8 7/8"	10"	9 1/4"	8 1/2"	8 7/8"
FS1760T-PB	2"	10 1/2"	12"	11 1/4"	10 1/2"	10 7/8"
	3"	10 7/8"	12"	11 1/4"	10 1/2"	10 7/8"
	4"	10 7/8"	12"	11 1/4"	10 1/2"	10 7/8"

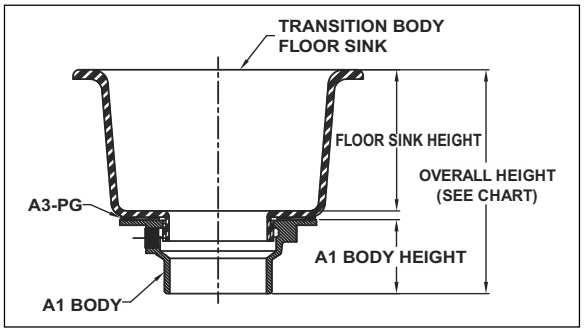

FS1520 8" x 8" x 6" DEEP FLOOR SINK

FS1520

FS1520 PARTS	FS1520-PB	FS1500-PG-(*)

Note: Specify outlet size and connection type.

Dome strainer included with body.

(*) Specify 150 for 1/2 grate, 175 for 3/4 grate or nothing for full grate
Note: For Nickel Bronze or Stainless Steel grate and frame, specify -TA instead of -PG and specify -1 for Nickel Bronze and -3 for Stainless Steel

FS1520T (Transition Body) PARTS	FS1520T-PB	FS1500-PG-(*)	A3-PG	A1 Body

Note: Specify outlet size and connection type.

Dome strainer included with body.

(*) Specify 150 for 1/2 grate, 175 for 3/4 grate or nothing for full grate
Note: For Nickel Bronze or Stainless Steel grate and frame, specify -TA instead of -PG and specify -1 for Nickel Bronze and -3 for Stainless Steel

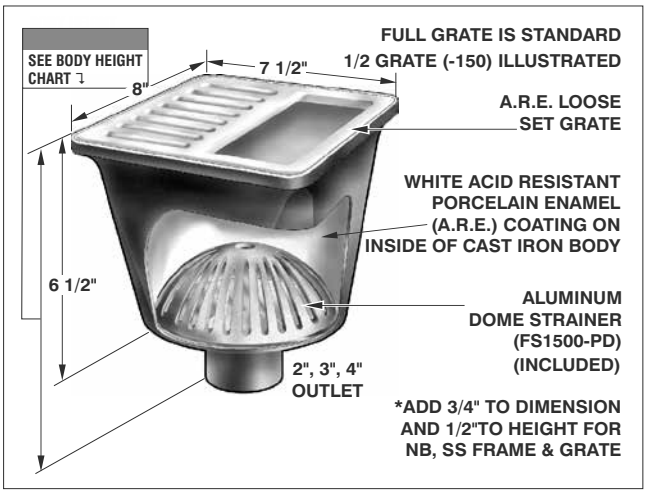

FS1520 and FS1520T BODY HEIGHT

PIPE SIZE	NO HUB STANDARD	PUSH ON (P)	INSIDE CAULK (X)	THREADED (T)	PVC (-30)	ABS (-31)
2"	7 3/4"	7 3/4"	8 5/8"	*8 1/2"	*9 5/8"	*9 5/8"
3"	7 3/4"	7 3/4"	8 5/8"	*8 7/8"	*9 5/8"	*9 5/8"
4"	7 3/4"	7 3/4"	**8 5/8"	*8 7/8"	*9 5/8"	*9 5/8"

*Indicates outlet size and connection available with transition outlet body only.
** 4" Inside Caulk outlet body only available with -FL anchor flange (as a std. body design not transition)

A.R.E. CAST IRON BODY WITH FULL GRATE & ALUMINUM DOME STRAINER

MODEL NUMBER	WT. Lbs	DESCRIPTION	A.R.E. LOOSE GRATE (STANDARD)	NICKEL BRONZE FRAME AND GRATE (-1)	STAINLESS STEEL FRAME AND GRATE (-3)
FS1522,3,4	18.00	8" x 8" x 6" Deep	$ 2070.00	$ 2626.00	$ 2626.00

FS1520 AND FS1520-FL OPTIONAL VARIATIONS:

SUFFIX	DESCRIPTION	LIST PRICE	SUFFIX	DESCRIPTION	LIST PRICE
-5	Sediment bucket (FS1500-PB)	$ 264.00	-32	Deep seal trap (2", 3", 4" no hub) (MI-950 Series)	See MI-950, pg. 289
-6	Security screws (H-1039A, 4 pcs) (-1, -3 only)	$ 101.00	-51	2 ½" round center grate opening (-1, -3 only)	$ 235.00
-7	Trap seal primer connection	$ 257.00	-69	Stainless Steel Sediment bucket (FS1500-PB-3)	$ 570.00
-8	Backwater Valve (BV1250 Series) (2", 3", 4")	$ 497.00	-83	Stainless Steel mesh over stainless steel bucket (add to S.S. Bucket)	$ 622.00
-9	Hinged grate (-3 only)	$ 463.00	-150	Half grate	No Add
-21	Secondary flat strainer (FD-9600 Series)	$ 78.00	-175	3/4 grate	No Add
-22	Less Enamel Cast Iron grate **(deduct)**	-$ 257.00	-C	Membrane clamp (add to FS1520-FL only)	$ 202.00
-22	Less Nickel Bronze grate **(deduct)**	-$ 411.00	P	Push on outlet (2", 3" or 4")	No Add
-22	Less Stainless Steel grate **(deduct)**	-$ 411.00	T	Threaded outlet (2", 3" or 4")	$ 107.00
-30	PVC socket connection W/A.R.E. Body (2", 3", 4")	No Add	X	Inside caulk outlet (2", 3" or 4")	No Add
-31	ABS socket connection W/A.R.E. body (2", 3", 4")	No Add			

FLOOR SINK STANDARD FUNNEL OPTIONAL VARIATIONS:

SUFFIX	DESCRIPTION	A.R.E.	NICKEL BRONZE (-1) STAINLESS STEEL (-3)	SUFFIX	DESCRIPTION	A.R.E.	NICKEL BRONZE (-1) STAINLESS STEEL (-3)
-F4	4" round funnel	$ 247.00	$ 583.00	-F6	6" round funnel	$ 395.00	$ 862.00
-G	4" x 9" oval funnel	$ 583.00	$ 1204.00	-J	3" x 1" oval funnel	$ 276.00	$ 607.00

FS1520-FL 8" x 8" x 6" DEEP FLOOR SINK WITH FLANGE

FS1520-FL

FS1520-FL PARTS	FS1520-FL-PB	FS1500-PG-(*)

Note: Specify outlet size and connection type.

Dome strainer included with body.

(*) Specify 150 for 1/2 grate, 175 for 3/4 grate or nothing for full grate
Note: For Nickel Bronze or Stainless Steel grate and frame, specify -TA instead of -PG and specify -1 for Nickel Bronze and -3 for Stainless Steel

FS1520T-FL (Transition Body) PARTS	FS1520T-FL-PB	FS1500-PG-(*)	A3-PG	A1 Body

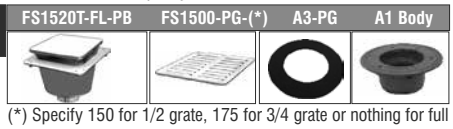

Note: Specify outlet size and connection type.

Dome strainer included with body.

(*) Specify 150 for 1/2 grate, 175 for 3/4 grate or nothing for full grate
Note: For Nickel Bronze or Stainless Steel grate and frame, specify -TA instead of -PG and specify -1 for Nickel Bronze and -3 for Stainless Steel

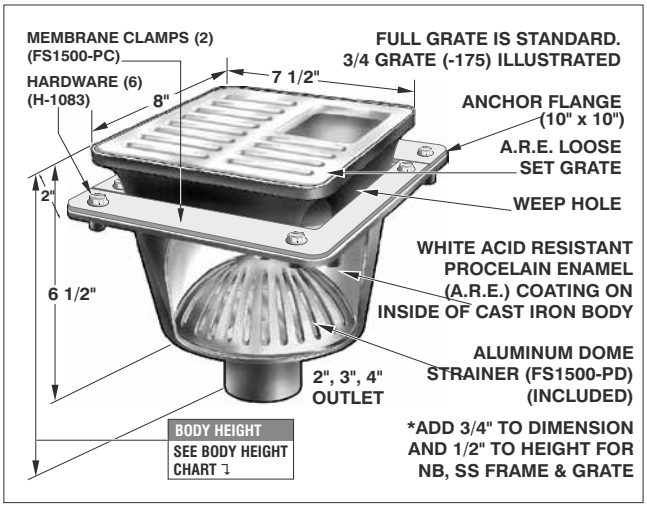

FS1520-FL and FS1520T-FL BODY HEIGHT

PIPE SIZE	NO HUB STANDARD	PUSH ON (P)	INSIDE CAULK (X)	THREADED (T)	PVC (-30)	ABS (-31)
2"	7 3/4"	7 3/4"	8 5/8"	*8 1/2"	* 9 1/4"	* 9 1/4"
3"	7 3/4"	7 3/4"	8 5/8"	*8 7/8"	* 9 1/4"	* 9 1/4"
4"	7 3/4"	7 3/4"	8 5/8"	*8 7/8"	* 9 1/4"	* 9 1/4"

*Indicates outlet size and connection available with transition outlet body only.
** 4" Inside Caulk outlet body only available with -FL anchor flange (as a std. body design not transition)

A.R.E. CAST IRON BODY WITH FULL GRATE & ALUMINUM DOME STRAINER

MODEL NUMBER	WT. Lbs	DESCRIPTION	A.R.E. LOOSE GRATE (STANDARD)	NICKEL BRONZE FRAME AND GRATE (-1)	STAINLESS STEEL FRAME AND GRATE (-3)
FS1522,3,4-FL	21.00	8" x 8" x 6" deep w/flange	$ 2315.00	$ 2871.00	$ 2871.00

FLOOR SINKS

FS1530 8" x 4" x 4" DEEP FLOOR SINK FS1530

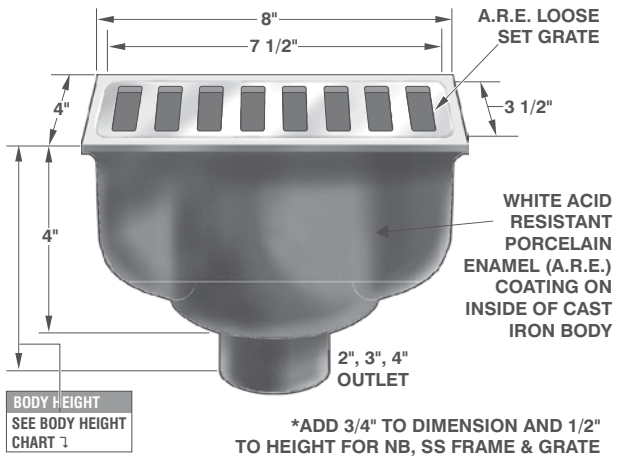

FS1530T (Transition Body) PARTS

FS1530T-PB	FS1530-PG-(*)	A3-PG	A1 Body
	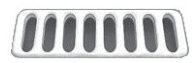		

Note: Specify outlet size and connection type. Dome strainer included with body.

(*) Specify 150 for 1/2 grate, 175 for 3/4 grate or nothing for full grate

Note: For Nickel Bronze or Stainless Steel grate and frame, specify -TA instead of -PG and specify -1 for Nickel Bronze and -3 for Stainless Steel

FS1530T BODY HEIGHT

PIPE SIZE	NO HUB STANDARD	PUSH ON (P)	INSIDE CAULK (X)	THREADED (T)	PVC (-30)	ABS (-31)
2"	*6 1/2"	*7 1/4"	*8"	*6 1/2"	*7 1/4"	*7 1/4"
3"	*6 1/2"	*7 1/4"	*8"	*6 7/8"	*7 1/4"	*7 1/4"
4"	*6 1/2"	*7 1/4"	*8"	*6 7/8"	*7 1/4"	*7 1/4"

*Indicates outlet size and connection available with transition outlet body only.

A.R.E. CAST IRON BODY WITH FULL GRATE & ALUMINUM DOME STRAINER

MODEL NUMBER	WT. Lbs	DESCRIPTION	A.R.E. LOOSE GRATE (STANDARD)	NICKEL BRONZE FRAME AND GRATE (-1)	STAINLESS STEEL FRAME AND GRATE (-3)
FS1532,3,4	18.00	8" x 4" x 4" Deep	$ 2136.00	$ 2561.00	$ 2561.00

FS1530 AND FS1530-FL OPTIONAL VARIATIONS:

SUFFIX	DESCRIPTION	LIST PRICE	SUFFIX	DESCRIPTION	LIST PRICE
-5	Sediment bucket (FS1530-PB)	$ 257.00	-32	Deep seal trap (2", 3", 4" no hub) (MI-950 Series)	See MI-950, pg. 289
-6	Security screws (H-1039A, 4 pcs) (-1, -3 only)	$ 106.00	-51	2 ½" round center grate opening (-1, -3 only)	$ 235.00
-7	Trap seal primer connection	$ 257.00	-69	Stainless Steel Sediment bucket (FS1530-PB-3)	$ 622.00
-8	Backwater Valve (BV1250 Series) (2", 3", 4")	$ 497.00	-83	Stainless Steel mesh over stainless steel bucket (add to S.S. Bucket)	$ 622.00
-21	Secondary flat strainer (FD-9600 Series)	$ 78.00	-150	Half grate	No Add
-22	Less Enamel Cast Iron grate **(deduct)**	-$ 198.00	-175	3/4 grate	No Add
-22	Less Nickel Bronze grate **(deduct)**	-$ 400.00	-C	Membrane clamp (add to FS1530-FL only)	$ 243.00
-22	Less Stainless Steel grate **(deduct)**	-$ 400.00	P	Push on outlet (2", 3" or 4")	No Add
-30	PVC socket connection W/A.R.E. Body (2", 3", 4")	No Add	T	Threaded outlet (2", 3" or 4")	$ 107.00
-31	ABS socket connection W/A.R.E. body (2", 3", 4")	No Add	X	Inside caulk outlet (2", 3" or 4")	No Add

FLOOR SINK STANDARD FUNNEL OPTIONAL VARIATIONS:

SUFFIX	DESCRIPTION	A.R.E.	NICKEL BRONZE (-1) STAINLESS STEEL (-3)	SUFFIX	DESCRIPTION	A.R.E.	NICKEL BRONZE (-1) STAINLESS STEEL (-3)
-F4	4" round funnel	$ 247.00	$ 583.00	-F6	6" round funnel	$ 395.00	$ 862.00
-G	4" x 9" oval funnel	$ 583.00	$ 1204.00	-J	3" x 1" oval funnel	$ 276.00	$ 607.00

FS1530-FL 8" x 4" x 4" DEEP FLOOR SINK WITH FLANGE FS1530-FL

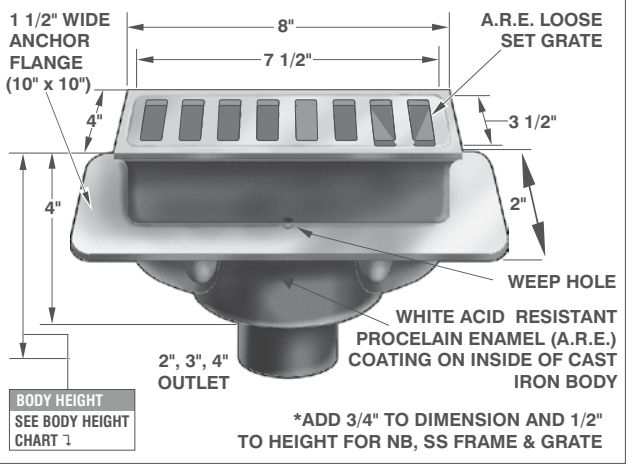

FS1530T-FL (Transition Body) PARTS

FS1530T-FL-PB	FS1530-PG-(*)	A3-PG	A1 Body
	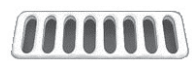		

Note: Specify outlet size and connection type. Dome strainer included with body.

(*) Specify 150 for 1/2 grate, 175 for 3/4 grate or nothing for full grate

Note: For Nickel Bronze or Stainless Steel grate and frame, specify -TA instead of -PG and specify -1 for Nickel Bronze and -3 for Stainless Steel

FS1530T-FL BODY HEIGHT

PIPE SIZE	NO HUB STANDARD	PUSH ON (P)	INSIDE CAULK (X)	THREADED (T)	PVC (-30)	ABS (-31)
2"	*6 1/2"	*7 1/4"	*8"	*6 1/2"	*7 1/4"	*7 1/4"
3"	*6 1/2"	*7 1/4"	*8"	*6 7/8"	*7 1/4"	*7 1/4"
4"	*6 1/2"	*7 1/4"	*8"	*6 7/8"	*7 1/4"	*7 1/4"

*Indicates outlet size and connection available with transition outlet body only.

A.R.E. CAST IRON BODY WITH FULL GRATE & ALUMINUM DOME STRAINER

MODEL NUMBER	WT. Lbs	DESCRIPTION	A.R.E. LOOSE GRATE (STANDARD)	NICKEL BRONZE FRAME AND GRATE (-1)	STAINLESS STEEL FRAME AND GRATE (-3)
FS1532,3,4-FL	21.00	8" x 4" x 4" Deep w/flange	$ 2393.00	$ 2818.00	$ 2818.00

Design and dimensions are subject to modification. Prices do not include applicable taxes. Visit **www.mifab.com** for the most recent product information.
MIFAB®, Inc., 1321 West 119th Street, Chicago, Illinois 60643-5109, USA Toll Free: 1-800-465-2736 • Fax: 1-773-341-3049
All sales subject to MIFAB's® Terms & Warranties. Please refer to inside front cover. sales@mifab.com • Canada Toll Free: 1-800-387-3880

FS1720 12" x 12" x 6" DEEP FLOOR SINK FS1720

FS1720 PARTS	FS1720-PB	FS1700-PG-(*)

Note: Specify outlet size and connection type.

Dome strainer included with body.

(*) Specify 150 for 1/2 grate, 175 for 3/4 grate or nothing for full grate
Note: For Nickel Bronze or Stainless Steel grate and frame, specify -TA instead of -PG and specify -1 for Nickel Bronze and -3 for Stainless Steel

FS1720T (Transition Body) PARTS	FS1720T-PB	FS1700-PG-(*)	A3-PG	A1 Body

Note: Specify outlet size and connection type.

Dome strainer included with body.

(*) Specify 150 for 1/2 grate, 175 for 3/4 grate or nothing for full grate
Note: For Nickel Bronze or Stainless Steel grate and frame, specify -TA instead of -PG and specify -1 for Nickel Bronze and -3 for Stainless Steel

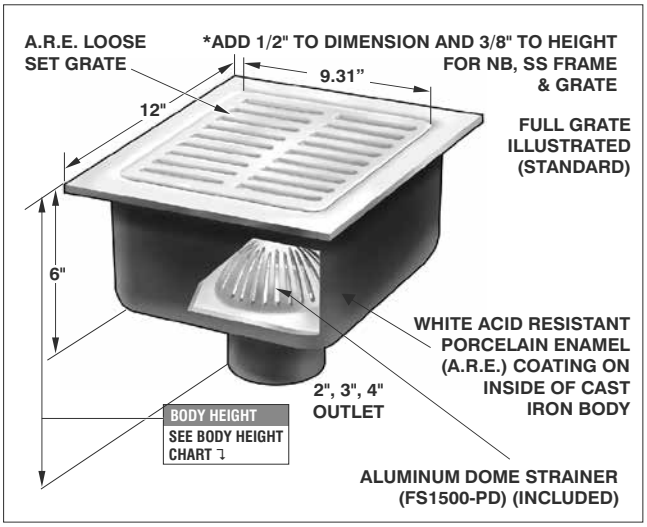

FS1720 and FS1720T BODY HEIGHT

PIPE SIZE	NO HUB STANDARD	PUSH ON (P)	INSIDE CAULK (X)	THREADED (T)	PVC (-30)	ABS (-31)
2"	7 3/4"	7 3/4"	8 5/8"	*8 1/2"	*9 1/4"	*9 1/4"
3"	7 3/4"	7 3/4"	8 5/8"	*8 7/8"	*9 1/4"	*9 1/4"
4"	7 3/4"	*8 7/8"	8 5/8"	*8 7/8"	*9 1/4"	*9 1/4"

*Indicates outlet size and connection available with transition outlet body only.
** 4" Inside Caulk outlet body only available with -FL anchor flange

A.R.E. CAST IRON BODY WITH FULL GRATE & ALUMINUM DOME STRAINER

MODEL NUMBER	WT. Lbs	DESCRIPTION	A.R.E. LOOSE GRATE (STANDARD)	NICKEL BRONZE FRAME AND GRATE (-1)	STAINLESS STEEL FRAME AND GRATE (-3)
FS1722,3,4	29.00	12" x 12" x 6" Deep	$ 2772.00	$ 3752.00	$ 3752.00

FS1720 AND FS1720-FL OPTIONAL VARIATION

SUFFIX	DESCRIPTION	LIST PRICE	SUFFIX	DESCRIPTION	LIST PRICE
-5	Sediment bucket (FS1700-PB)	$ 419.00	-32	Deep seal trap (2", 3", 4" no hub) (MI-950 Series)	See MI-950, pg. 289
-6	Security screws (H-1039A, 4 pcs) (-1, -3 only)	$ 106.00	-51	2 ½" round center grate opening (-1, -3 only)	$ 235.00
-7	Trap seal primer connection	$ 257.00	-69	Stainless Steel Sediment bucket (FS1700-PB-3)	$ 785.00
-8	Backwater Valve (BV1250 Series) (2", 3", 4")	$ 497.00	-83	Stainless Steel mesh over stainless steel bucket (add to S.S. Bucket)	$ 622.00
-9	Hinged grate (-3 only)	$ 463.00	-150	Half grate	No Add
-21	Secondary flat strainer (FD-9600 Series)	$ 78.00	-175	3/4 grate	No Add
-22	Less Enamel Cast Iron grate **(deduct)**	-$ 301.00	-C	Membrane clamp (add to FS1720-FL only)	$ 254.00
-22	Less Nickel Bronze grate **(deduct)**	-$ 645.00	P	Push on outlet (2", 3" or 4")	No Add
-22	Less Stainless Steel grate **(deduct)**	-$ 645.00	T	Threaded outlet (2", 3" or 4")	$ 107.00
-30	PVC socket connection W/A.R.E. Body (2", 3", 4")	No Add	X	Inside caulk outlet (2", 3" or 4")	No Add
-31	ABS socket connection W/A.R.E. body (2", 3", 4")	No Add			

FLOOR SINK STANDARD FUNNEL OPTIONAL VARIATIONS:

SUFFIX	DESCRIPTION	A.R.E.	NICKEL BRONZE (-1) STAINLESS STEEL (-3)	SUFFIX	DESCRIPTION	A.R.E.	NICKEL BRONZE (-1) STAINLESS STEEL (-3)
-F4	4" round funnel	$ 247.00	$ 583.00	-F6	6" round funnel	$ 395.00	$ 862.00
-G	4" x 9" oval funnel	$ 583.00	$ 1204.00	-J	3" x 1" oval funnel	$ 276.00	$ 607.00

FS1720-FL 12" x 12" x 6" DEEP FLOOR SINK WITH FLANGE FS1720-FL

FS1720-FL PARTS	FS1720-FL-PB	FS1700-PG-(*)

Note: Specify outlet size and connection type.

Dome strainer included with body.

(*) Specify 150 for 1/2 grate, 175 for 3/4 grate or nothing for full grate
Note: For Nickel Bronze or Stainless Steel grate and frame, specify -TA instead of -PG and specify -1 for Nickel Bronze and -3 for Stainless Steel

FS1720T-FL (Transition Body) PARTS	FS1720T-FL-PB	FS1700-PG-(*)	A3-PG	A1 Body

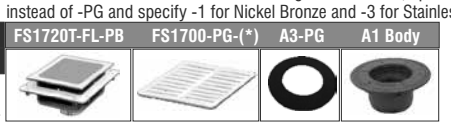

Note: Specify outlet size and connection type.

Dome strainer included with body.

(*) Specify 150 for 1/2 grate, 175 for 3/4 grate or nothing for full grate
Note: For Nickel Bronze or Stainless Steel grate and frame, specify -TA instead of -PG and specify -1 for Nickel Bronze and -3 for Stainless Steel

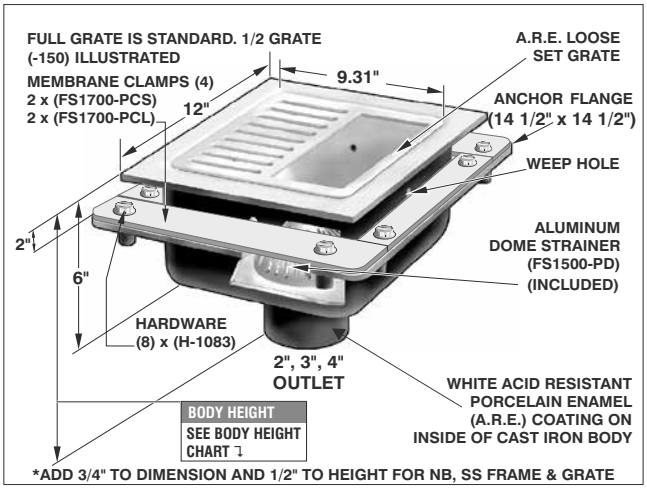

FS1720-FL and FS1720T-FL BODY HEIGHT

PIPE SIZE	NO HUB STANDARD	PUSH ON (P)	INSIDE CAULK (X)	THREADED (T)	PVC (-30)	ABS (-31)
2"	7 3/4"	7 3/4"	8 5/8"	*8 1/2"	*9 1/4"	*9 1/4"
3"	7 3/4"	7 3/4"	8 5/8"	*8 7/8"	*9 1/4"	*9 1/4"
4"	7 3/4"	7 3/4"	8 5/8"	*8 7/8"	*9 1/4"	*9 1/4"

*Indicates outlet size and connection available with transition outlet body only.

A.R.E. CAST IRON BODY WITH FULL GRATE & ALUMINUM DOME STRAINER

MODEL NUMBER	WT. Lbs	DESCRIPTION	A.R.E. LOOSE GRATE (STANDARD)	NICKEL BRONZE FRAME AND GRATE (-1)	STAINLESS STEEL FRAME AND GRATE (-3)
FS1722,3,4-FL	40.00	12" x 12" x 6" deep w/flange	$ 3281.00	$ 4261.00	$ 4261.00

FS1730 12" x 12" x 8" DEEP FLOOR SINK FS1730

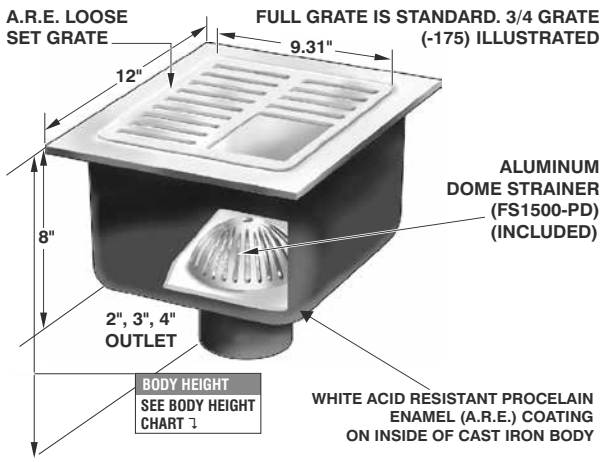

*ADD 3/4" TO DIMENSION AND 1/2" TO HEIGHT FOR NB, SS FRAME & GRATE

FS1730 PARTS — FS1730-PB, FS1700-PG-(*)

Note: Specify outlet size and connection type.

Dome strainer included with body.

(*) Specify 150 for 1/2 grate, 175 for 3/4 grate or nothing for full grate

Note: For Nickel Bronze or Stainless Steel grate and frame, specify -TA instead of -PG and specify -1 for Nickel Bronze and -3 for Stainless Steel

FS1730T (Transition Body) PARTS — FS1730T-PB, FS1700-PG-(*), A3-PG, A1 Body

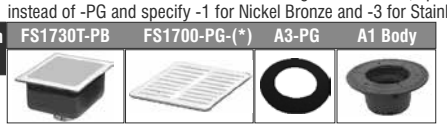

Note: Specify outlet size and connection type.

Dome strainer included with body.

(*) Specify 150 for 1/2 grate, 175 for 3/4 grate or nothing for full grate

Note: For Nickel Bronze or Stainless Steel grate and frame, specify -TA instead of -PG and specify -1 for Nickel Bronze and -3 for Stainless Steel

FS1730 and FS1730T BODY HEIGHT

PIPE SIZE	NO HUB STANDARD	PUSH ON (P)	INSIDE CAULK (X)	THREADED (T)	PVC (-30)	ABS (-31)
2"	9 3/4"	9 3/4"	10 5/8"	*10 1/2"	*11 1/4"	*11 1/4"
3"	9 3/4"	9 3/4"	10 5/8"	*10 7/8"	*11 1/4"	*11 1/4"
4"	9 3/4"	9 3/4"	10 5/8"	*10 7/8"	*11 1/4"	*11 1/4"

*Indicates outlet size and connection available with transition outlet body only.
** 4" Inside Caulk outlet body only available with -FL anchor flange

A.R.E. CAST IRON BODY WITH FULL GRATE & ALUMINUM DOME STRAINER

MODEL NUMBER	WT. Lbs	DESCRIPTION	A.R.E. LOOSE GRATE (STANDARD)	NICKEL BRONZE FRAME AND GRATE (-1)	STAINLESS STEEL FRAME AND GRATE (-3)
FS1732,3,4	37.00	12" x 12" x 8" Deep	$ 2918.00	$ 3896.00	$ 3896.00

FS1730 AND FS1730-FL OPTIONAL VARIATION

SUFFIX	DESCRIPTION	LIST PRICE	SUFFIX	DESCRIPTION	LIST PRICE
-5	Sediment bucket (FS1700-PB)	$ 419.00	-32	Deep seal trap (2", 3", 4" no hub) (MI-950 Series)	See MI-950, pg. 289
-6	Security screws (H-1039A, 4 pcs) (-1, -3 only)	$ 106.00	-51	2 ½" round center grate opening (-1, -3 only)	$ 235.00
-7	Trap seal primer connection	$ 257.00	-69	Stainless Steel Sediment bucket (FS1700-PB-3)	$ 785.00
-8	Backwater Valve (BV1250 Series) (2", 3", 4")	$ 497.00	-83	Stainless Steel mesh over stainless steel bucket (add to S.S. Bucket)	$ 622.00
-9	Hinged grate (-3 only)	$ 463.00	-150	Half grate	No Add
-21	Secondary flat strainer (FD-9600 Series)	$ 78.00	-175	3/4 grate	No Add
-22	Less Enamel Cast Iron grate **(deduct)**	-$ 301.00	-C	Membrane clamp (add to FS1730-FL only)	$ 254.00
-22	Less Nickel Bronze grate **(deduct)**	-$ 645.00	P	Push on outlet (2", 3" or 4")	No Add
-22	Less Stainless Steel grate **(deduct)**	-$ 645.00	T	Threaded outlet (2", 3" or 4")	$ 107.00
-30	PVC socket connection W/A.R.E. Body (2", 3", 4")	No Add	X	Inside caulk outlet (2", 3" or 4")	No Add
-31	ABS socket connection W/A.R.E. body (2", 3", 4")	No Add			

FLOOR SINK STANDARD FUNNEL OPTIONAL VARIATIONS:

SUFFIX	DESCRIPTION	A.R.E.	NICKEL BRONZE (-1) STAINLESS STEEL (-3)	SUFFIX	DESCRIPTION	A.R.E.	NICKEL BRONZE (-1) STAINLESS STEEL (-3)
-F4	4" round funnel	$ 247.00	$ 583.00	-F6	6" round funnel	$ 395.00	$ 862.00
-G	4" x 9" oval funnel	$ 583.00	$ 1204.00	-J	3" x 1" oval funnel	$ 276.00	$ 607.00

FS1730-FL 12" x 12" x 8" DEEP FLOOR SINK WITH FLANGE FS1730-FL

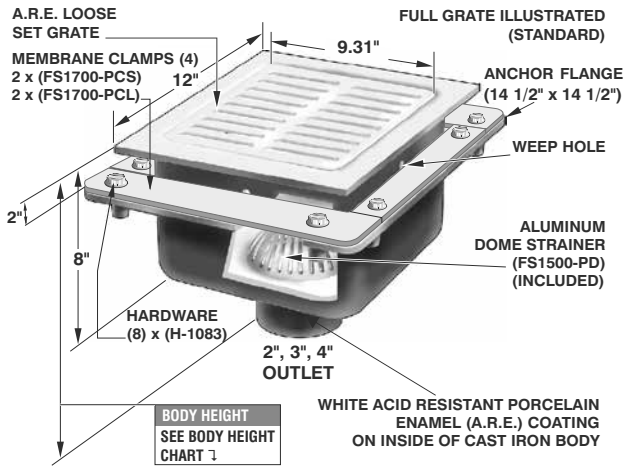

*ADD 3/4" TO DIMENSION AND 1/2" TO HEIGHT FOR NB, SS FRAME & GRATE

FS1730-FL PARTS — FS1730-FL-PB, FS1700-PG-(*)

Note: Specify outlet size and connection type.

Dome strainer included with body.

(*) Specify 150 for 1/2 grate, 175 for 3/4 grate or nothing for full grate

Note: For Nickel Bronze or Stainless Steel grate and frame, specify -TA instead of -PG and specify -1 for Nickel Bronze and -3 for Stainless Steel

FS1730T-FL (Transition Body) PARTS — FS1730T-FL-PB, FS1700-PG-(*), A3-PG, A1 Body

Note: Specify outlet size and connection type.

Dome strainer included with body.

(*) Specify 150 for 1/2 grate, 175 for 3/4 grate or nothing for full grate

Note: For Nickel Bronze or Stainless Steel grate and frame, specify -TA instead of -PG and specify -1 for Nickel Bronze and -3 for Stainless Steel

FS1730-FL and FS1730T-FL BODY HEIGHT

PIPE SIZE	NO HUB STANDARD	PUSH ON (P)	INSIDE CAULK (X)	THREADED (T)	PVC (-30)	ABS (-31)
2"	9 3/4"	9 3/4"	*12"	*10 1/2"	*11 1/4"	*11 1/4"
3"	9 3/4"	9 3/4"	10 5/8"	*10 7/8"	*11 1/4"	*11 1/4"
4"	9 3/4"	9 3/4"	10 5/8"	*10 7/8"	*11 1/4"	*11 1/4"

*Indicates outlet size and connection available with transition outlet body only.

A.R.E. CAST IRON BODY WITH FULL GRATE & ALUMINUM DOME STRAINER

MODEL NUMBER	WT. Lbs	DESCRIPTION	A.R.E. LOOSE GRATE (STANDARD)	NICKEL BRONZE FRAME AND GRATE (-1)	STAINLESS STEEL FRAME AND GRATE (-3)
FS1732,3,4-FL	44.00	12" x 12" x 8" deep w/flange	$ 3427.00	$ 4405.00	$ 4405.00

Design and dimensions are subject to modification. Prices do not include applicable taxes. Visit **www.mifab.com** for the most recent product information.
MIFAB®, Inc., 1321 West 119th Street, Chicago, Illinois 60643-5109, USA Toll Free: 1-800-465-2736 • Fax: 1-773-341-3049
All sales subject to MIFAB's® Terms & Warranties. Please refer to inside front cover. sales@mifab.com • Canada Toll Free: 1-800-387-3880

FS1740 12" x 12" x 10" DEEP FLOOR SINK FS1740

FS1740 PARTS	FS1740-PB	FS1700-PG-(*)

Note: Specify outlet size and connection type.
Dome strainer included with body.

(*) Specify 150 for 1/2 grate, 175 for 3/4 grate or nothing for full grate
Note: For Nickel Bronze or Stainless Steel grate and frame, specify -TA instead of -PG and specify -1 for Nickel Bronze and -3 for Stainless Steel

FS1740T (Transition Body) PARTS	FS1740T-PB	FS1700-PG-(*)	A3-PG	A1 Body

Note: Specify outlet size and connection type.
Dome strainer included with body.

(*) Specify 150 for 1/2 grate, 175 for 3/4 grate or nothing for full grate
Note: For Nickel Bronze or Stainless Steel grate and frame, specify -TA instead of -PG and specify -1 for Nickel Bronze and -3 for Stainless Steel

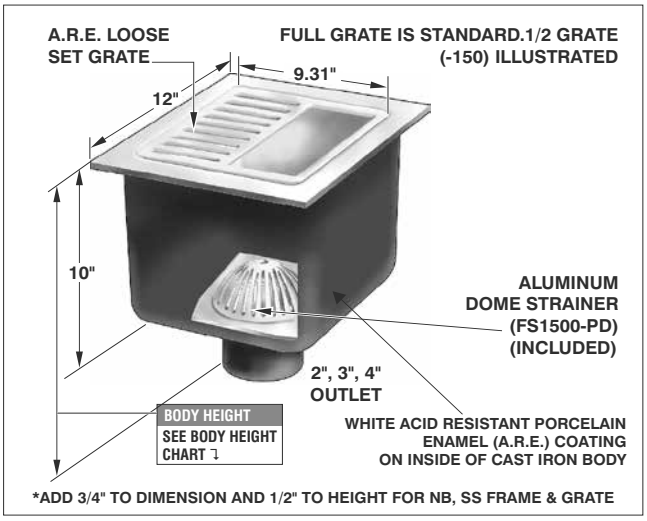

*ADD 3/4" TO DIMENSION AND 1/2" TO HEIGHT FOR NB, SS FRAME & GRATE

FS1740 and FS1740T BODY HEIGHT

PIPE SIZE	NO HUB STANDARD	PUSH ON (P)	INSIDE CAULK (X)	THREADED (T)	PVC (-30)	ABS (-31)
2"	11 1/2"	11 1/2"	*14"	*12 1/2"	*13 1/4"	*13 1/4"
3"	11 1/2"	11 1/2"	*14"	*12 7/8"	*13 1/4"	*13 1/4"
4"	*12 1/2"	11 1/2"	**12 5/8"	*12 7/8"	*13 1/4"	*13 1/4"

*Indicates outlet size and connection available with transition outlet body only.
** 4" Inside Caulk outlet body only available with -FL anchor flange.

A.R.E. CAST IRON BODY WITH FULL GRATE & ALUMINUM DOME STRAINER

MODEL NUMBER	WT. Lbs	DESCRIPTION	A.R.E. LOOSE GRATE (STANDARD)	NICKEL BRONZE FRAME AND GRATE (-1)	STAINLESS STEEL FRAME AND GRATE (-3)
FS1742,3,4	42.00	12" x 12" x 10" Deep	$ 3084.00	$ 4059.00	$ 4059.00

FS1740 AND FS1740-FL OPTIONAL VARIATION

SUFFIX	DESCRIPTION	LIST PRICE	SUFFIX	DESCRIPTION	LIST PRICE
-5	Sediment bucket (FS1700-PB)	$ 419.00	-32	Deep seal trap (2", 3", 4" no hub) (MI-950 Series)	See MI-950, pg. 289
-6	Security screws (H-1039A, 4 pcs) (-1, -3 only)	$ 106.00	-51	2 ½" round center grate opening (-1, -3 only)	$ 235.00
-7	Trap seal primer connection	$ 257.00	-69	Stainless Steel Sediment bucket (FS1700-PB-3)	$ 785.00
-8	Backwater Valve (BV1250 Series) (2", 3", 4")	$ 497.00	-83	Stainless Steel mesh over stainless steel bucket (add to S.S. Bucket)	$ 622.00
-9	Hinged grate (-3 only)	$ 463.00	-150	Half grate	No Add
-21	Secondary flat strainer (FD-9600 Series)	$ 78.00	-175	3/4 grate	No Add
-22	Less Enamel Cast Iron grate **(deduct)**	-$ 301.00	-C	Membrane clamp (add to FS1740-FL only)	$ 254.00
-22	Less Nickel Bronze grate **(deduct)**	-$ 645.00	P	Push on outlet (2", 3" or 4")	No Add
-22	Less Stainless Steel grate **(deduct)**	-$ 645.00	T	Threaded outlet (2", 3" or 4")	$ 107.00
-30	PVC socket connection W/A.R.E. Body (2", 3", 4")	No Add	X	Inside caulk outlet (2", 3" or 4")	No Add
-31	ABS socket connection W/A.R.E. body (2", 3", 4")	No Add			

FLOOR SINK STANDARD FUNNEL OPTIONAL VARIATIONS:

SUFFIX	DESCRIPTION	A.R.E.	NICKEL BRONZE (-1) STAINLESS STEEL (-3)	SUFFIX	DESCRIPTION	A.R.E.	NICKEL BRONZE (-1) STAINLESS STEEL (-3)
-F4	4" round funnel	$ 247.00	$ 583.00	-F6	6" round funnel	$ 395.00	$ 862.00
-G	4" x 9" oval funnel	$ 583.00	$ 1204.00	-J	3" x 1" oval funnel	$ 276.00	$ 607.00

FS1740-FL 12" x 12" x 10" DEEP FLOOR SINK WITH FLANGE FS1740-FL

FS1740-FL PARTS	FS1740-FL-PB	FS1700-PG-(*)

Note: Specify outlet size and connection type.
Dome strainer included with body.

(*) Specify 150 for 1/2 grate, 175 for 3/4 grate or nothing for full grate
Note: For Nickel Bronze or Stainless Steel grate and frame, specify -TA instead of -PG and specify -1 for Nickel Bronze and -3 for Stainless Steel

FS1740T-FL (Transition Body) PARTS	FS1740T-FL-PB	FS1700-PG-(*)	A3-PG	A1 Body

Note: Specify outlet size and connection type.
Dome strainer included with body.

(*) Specify 150 for 1/2 grate, 175 for 3/4 grate or nothing for full grate
Note: For Nickel Bronze or Stainless Steel grate and frame, specify -TA instead of -PG and specify -1 for Nickel Bronze and -3 for Stainless Steel

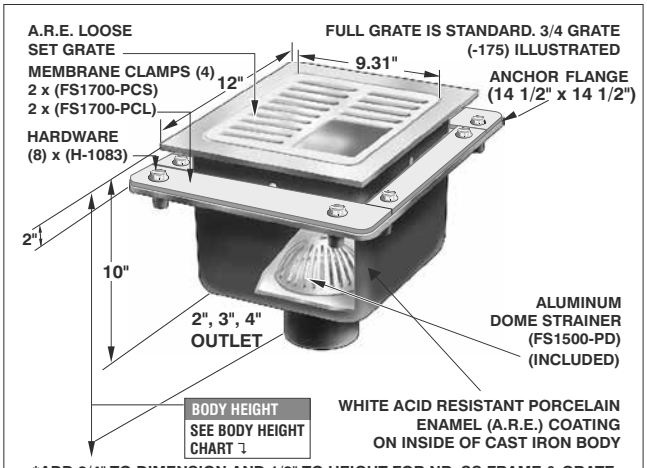

*ADD 3/4" TO DIMENSION AND 1/2" TO HEIGHT FOR NB, SS FRAME & GRATE

FS1740-FL and FS1740T-FL BODY HEIGHT

PIPE SIZE	NO HUB STANDARD	PUSH ON (P)	INSIDE CAULK (X)	THREADED (T)	PVC (-30)	ABS (-31)
2"	11 1/2"	11 1/2"	*14"	*12 1/2"	*13 1/4"	*13 1/4"
3"	11 1/2"	11 1/2"	12 5/8"	*12 7/8"	*13 1/4"	*13 1/4"
4"	11 1/2"	*12 7/8"	12 5/8"	*12 7/8"	*13 1/4"	*13 1/4"

*Indicates outlet size and connection available with transition outlet body only.

A.R.E. CAST IRON BODY WITH FULL GRATE & ALUMINUM DOME STRAINER

MODEL NUMBER	WT. Lbs	DESCRIPTION	A.R.E. LOOSE GRATE (STANDARD)	NICKEL BRONZE FRAME AND GRATE (-1)	STAINLESS STEEL FRAME AND GRATE (-3)
FS1742,3,4-FL	58.00	12" x 12" x 10" deep w/flange	$ 3593.00	$ 4569.00	$ 4569.00

FLOOR SINKS

FS1750 8" ROUND x 6" DEEP FLOOR SINK FS1750

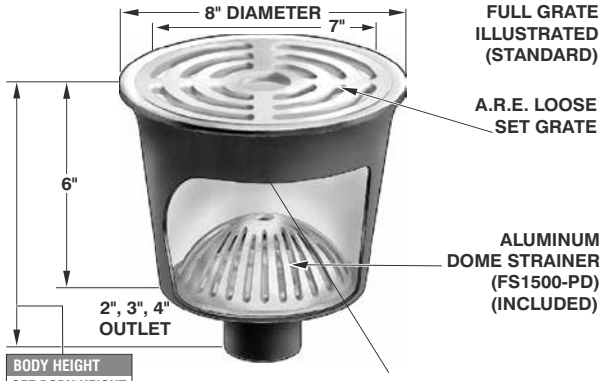

*ADD 1/2" TO DIMENSION AND 1/2" TO HEIGHT FOR NB, SS FRAME & GRATE

FS1750 PARTS FS1750-PB FS1750-PG-(*)

Note: Specify outlet size and connection type.

Dome strainer included with body.

(*) Specify 150 for 1/2 grate, 175 for 3/4 grate or nothing for full grate
Note: For Nickel Bronze or Stainless Steel grate and frame, specify -TA instead of -PG and specify -1 for Nickel Bronze and -3 for Stainless Steel

FS1750T (Transition Body) PARTS FS1750T-PB FS1750-PG-(*) A3-PG A1 Body

Note: Specify outlet size and connection type.

Dome strainer included with body.

(*) Specify 150 for 1/2 grate, 175 for 3/4 grate or nothing for full grate
Note: For Nickel Bronze or Stainless Steel grate and frame, specify -TA instead of -PG and specify -1 for Nickel Bronze and -3 for Stainless Steel

FS1750 and FS1750T BODY HEIGHT

PIPE SIZE	NO HUB STANDARD	PUSH ON (P)	INSIDE CAULK (X)	THREADED (T)	PVC (-30)	ABS (-31)
2"	7 1/2"	7 1/2"	7 1/2"	*8 1/2"	*9 1/4"	*9 1/4"
3"	7 1/2"	7 1/2"	7 1/2"	*8 7/8"	*9 1/4"	*9 1/4"
4"	7 1/2"	7 1/2"	7 1/2"	*8 7/8"	*9 1/4"	*9 1/4"

*Indicates outlet size and connection available with transition outlet body only.
** 4" Inside Caulk outlet body only available with -FL anchor flange.

A.R.E. CAST IRON BODY WITH FULL GRATE & ALUMINUM DOME STRAINER

MODEL NUMBER	WT. Lbs	DESCRIPTION	A.R.E. LOOSE GRATE (STANDARD)	NICKEL BRONZE FRAME AND GRATE (-1)	STAINLESS STEEL FRAME AND GRATE (-3)
FS1752,3,4	17.00	8" Round x 6" Deep	$ 1733.00	$ 2325.00	$ 2325.00

FS1750 AND FS1750-FL OPTIONAL VARIATIONS:

SUFFIX	DESCRIPTION	LIST PRICE	SUFFIX	DESCRIPTION	LIST PRICE
-5	Sediment bucket (FS1750-PB)	$ 301.00	-32	Deep seal trap (2", 3", 4" no hub) (MI-950 Series)	See MI-950, pg. 289
-6	Security screws (H-1039A, 4 pcs) (-1, -3 only)	$ 106.00	-51	2 ½" round center grate opening (-1, -3 only)	$ 235.00
-7	Trap seal primer connection	$ 257.00	-69	Stainless Steel Sediment bucket (FS1750-PB-3)	$ 709.00
-8	Backwater Valve (BV1250 Series) (2", 3", 4")	$ 497.00	-83	Stainless Steel mesh over stainless steel bucket (add to S.S. Bucket)	$ 622.00
-21	Secondary flat strainer (FD-9600 Series)	$ 78.00	-150	Half grate	No Add
-22	Less Enamel Cast Iron grate **(deduct)**	-$ 257.00	-175	3/4 grate	No Add
-22	Less Nickel Bronze grate **(deduct)**	-$ 279.00	-C	Membrane clamp (add to FS1750-FL only)	$ 243.00
-22	Less Stainless Steel grate **(deduct)**	-$ 279.00	P	Push on outlet (2", 3" or 4")	No Add
-30	PVC socket connection W/A.R.E. Body (2", 3", 4")	No Add	T	Threaded outlet (2", 3" or 4")	$ 107.00
-31	ABS socket connection W/A.R.E. body (2", 3", 4")	No Add	X	Inside caulk outlet (2", 3" or 4")	No Add

FLOOR SINK STANDARD FUNNEL OPTIONAL VARIATIONS:

SUFFIX	DESCRIPTION	A.R.E.	NICKEL BRONZE (-1) STAINLESS STEEL (-3)	SUFFIX	DESCRIPTION	A.R.E.	NICKEL BRONZE (-1) STAINLESS STEEL (-3)
-F4	4" round funnel	$ 247.00	$ 583.00	-F6	6" round funnel	$ 395.00	$ 862.00
-G	4" x 9" oval funnel	$ 583.00	$ 1204.00	-J	3" x 1" oval funnel	$ 276.00	$ 607.00

FS1750-FL 8" ROUND x 6" DEEP FLOOR SINK WITH FLANGE FS1750-FL

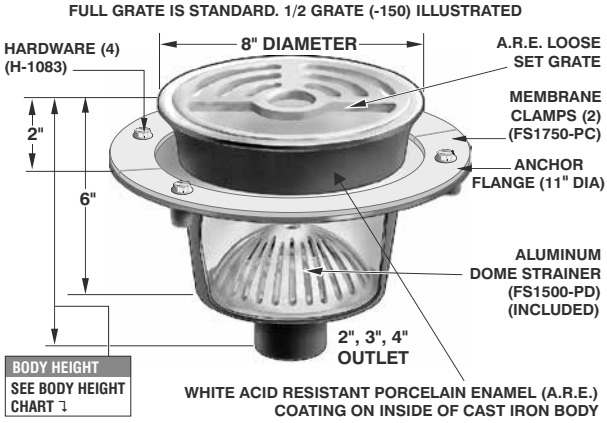

*ADD 1/2" TO DIMENSION AND 1/2" TO HEIGHT FOR NB, SS FRAME & GRATE

FS1750-FL PARTS FS1750-FL-PB FS1750-PG-(*)

Note: Specify outlet size and connection type.

Dome strainer included with body.

(*) Specify 150 for 1/2 grate, 175 for 3/4 grate or nothing for full grate
Note: For Nickel Bronze or Stainless Steel grate and frame, specify -TA instead of -PG and specify -1 for Nickel Bronze and -3 for Stainless Steel

FS1750T-FL (Transition Body) PARTS FS1750T-FL-PB FS1750-PG-(*) A3-PG A1 Body

Note: Specify outlet size and connection type.

Dome strainer included with body.

(*) Specify 150 for 1/2 grate, 175 for 3/4 grate or nothing for full grate
Note: For Nickel Bronze or Stainless Steel grate and frame, specify -TA instead of -PG and specify -1 for Nickel Bronze and -3 for Stainless Steel

FS1750-FL and FS1750T-FL BODY HEIGHT

PIPE SIZE	NO HUB STANDARD	PUSH ON (P)	INSIDE CAULK (X)	THREADED (T)	PVC (-30)	ABS (-31)
2"	7 1/2"	7 1/2"	*10"	*8 1/2"	*9 1/4"	*9 1/4"
3"	7 1/2"	*8 7/8"	7 1/2"	*8 7/8"	*9 1/4"	*9 1/4"
4"	7 1/2"	7 1/2"	7 1/2"	*8 7/8"	*9 1/4"	*9 1/4"

*Indicates outlet size and connection available with transition outlet body only.

A.R.E. CAST IRON BODY WITH FULL GRATE & ALUMINUM DOME STRAINER

MODEL NUMBER	WT. Lbs	DESCRIPTION	A.R.E. LOOSE GRATE (STANDARD)	NICKEL BRONZE FRAME AND GRATE (-1)	STAINLESS STEEL FRAME AND GRATE (-3)
FS1752,3,4-FL	19.00	8" Round x 6" Deep w/flange	$ 2112.00	$ 2704.00	$ 2704.00

Design and dimensions are subject to modification. Prices do not include applicable taxes. Visit **www.mifab.com** for the most recent product information.
MIFAB®, Inc., 1321 West 119th Street, Chicago, Illinois 60643-5109, USA Toll Free: 1-800-465-2736 • Fax: 1-773-341-3049
All sales subject to MIFAB's® Terms & Warranties. Please refer to inside front cover. sales@mifab.com • Canada Toll Free: 1-800-387-3880

FS1760 12" ROUND x 8" DEEP FLOOR SINK FS1760

FS1760 PARTS | FS1760-PB | FS1760-PG-(*)

Note: Specify outlet size and connection type.
Dome strainer included with body.

(*) Specify 150 for 1/2 grate, 175 for 3/4 grate or nothing for full grate
Note: For Nickel Bronze or Stainless Steel grate and frame, specify -TA instead of -PG and specify -1 for Nickel Bronze and -3 for Stainless Steel

FS1760T (Transition Body) PARTS | FS1760T-PB | FS1760-PG-(*) | A3-PG | A1 Body

Note: Specify outlet size and connection type.
Dome strainer included with body.

(*) Specify 150 for 1/2 grate, 175 for 3/4 grate or nothing for full grate
Note: For Nickel Bronze or Stainless Steel grate and frame, specify -TA instead of -PG and specify -1 for Nickel Bronze and -3 for Stainless Steel

FS1760 and FS1760T BODY HEIGHT

PIPE SIZE	NO HUB STANDARD	PUSH ON (P)	INSIDE CAULK (X)	THREADED (T)	PVC (-30)	ABS (-31)
2"	9 1/2"	10 5/8"	*10 5/8"	*10 1/2"	*11 1/4"	*11 1/4"
3"	*10 1/2"	10 5/8"	*10 5/8"	*10 7/8"	*11 1/4"	*11 1/4"
4"	9 1/2"	10 5/8"	**10 5/8"	*10 7/8"	*11 1/4"	*11 1/4"

*Indicates outlet size and connection available with transition outlet body only.
** 4" Inside Caulk outlet body only available with -FL anchor flange.

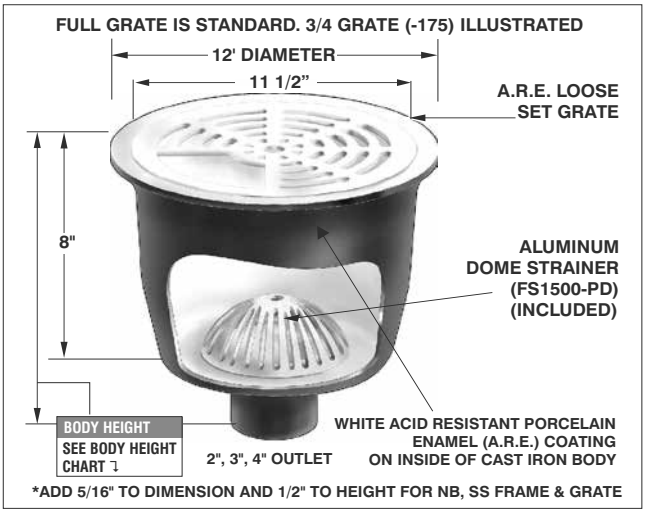

A.R.E. CAST IRON BODY WITH FULL GRATE & ALUMINUM DOME STRAINER

MODEL NUMBER	WT. Lbs	DESCRIPTION	A.R.E. LOOSE GRATE (STANDARD)	NICKEL BRONZE FRAME AND GRATE (-1)	STAINLESS STEEL FRAME AND GRATE (-3)
FS1762,3,4	29.00	12" Round x 8" Deep	$ 2199.00	$ 3505.00	$ 3505.00

FS1760 AND FS1760-FL OPTIONAL VARIATIONS:

SUFFIX	DESCRIPTION	LIST PRICE	SUFFIX	DESCRIPTION	LIST PRICE
-5	Sediment bucket (FS1760-PB)	$ 419.00	-32	Deep seal trap (2", 3", 4" no hub) (MI-950 Series)	See MI-950, pg. 289
-6	Security screws (H-1039A, 4 pcs) (-1, -3 only)	$ 106.00	-51	2 ½" round center grate opening (-1, -3 only)	$ 235.00
-7	Trap seal primer connection	$ 257.00	-69	Stainless Steel Sediment bucket (FS1760-PB-3)	$ 622.00
-8	Backwater Valve (BV1250 Series) (2", 3", 4")	$ 497.00	-83	Stainless Steel mesh over stainless steel bucket (add to S.S. Bucket)	$ 622.00
-21	Secondary flat strainer (FD-9600 Series)	$ 78.00	-150	Half grate	No Add
-22	Less Enamel Cast Iron grate **(deduct)**	-$ 353.00	-175	3/4 grate	No Add
-22	Less Nickel Bronze grate **(deduct)**	-$ 672.00	-C	Membrane clamp (add to FS1760-FL only)	$ 239.00
-22	Less Stainless Steel grate **(deduct)**	-$ 672.00	P	Push on outlet (2", 3" or 4")	No Add
-30	PVC socket connection W/A.R.E. Body (2", 3", 4")	No Add	T	Threaded outlet (2", 3" or 4")	$ 107.00
-31	ABS socket connection W/A.R.E. body (2", 3", 4")	No Add	X	Inside caulk outlet (2", 3" or 4")	No Add

FLOOR SINK STANDARD FUNNEL OPTIONAL VARIATIONS:

SUFFIX	DESCRIPTION	A.R.E.	NICKEL BRONZE (-1) STAINLESS STEEL (-3)	SUFFIX	DESCRIPTION	A.R.E.	NICKEL BRONZE (-1) STAINLESS STEEL (-3)
-F4	4" round funnel	$ 247.00	$ 583.00	-F6	6" round funnel	$ 395.00	$ 862.00
-G	4" x 9" oval funnel	$ 583.00	$ 1204.00	-J	3" x 1" oval funnel	$ 276.00	$ 607.00

FS1760-FL 12" ROUND x 8" DEEP FLOOR SINK WITH FLANGE FS1760-FL

FS1760-FL PARTS | FS1760-FL-PB | FS1760-PG-(*)

Note: Specify outlet size and connection type.
Dome strainer included with body.

(*) Specify 150 for 1/2 grate, 175 for 3/4 grate or nothing for full grate
Note: For Nickel Bronze or Stainless Steel grate and frame, specify -TA instead of -PG and specify -1 for Nickel Bronze and -3 for Stainless Steel

FS1760T-FL (Transition Body) PARTS | FS1760-FL-PB | FS1760-PG-(*) | A3-PG | A1 Body

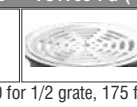

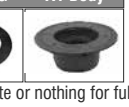

Note: Specify outlet size and connection type.
Dome strainer included with body.

(*) Specify 150 for 1/2 grate, 175 for 3/4 grate or nothing for full grate
Note: For Nickel Bronze or Stainless Steel grate and frame, specify -TA instead of -PG and specify -1 for Nickel Bronze and -3 for Stainless Steel

FS1760-FL and FS1760T-FL BODY HEIGHT

PIPE SIZE	NO HUB STANDARD	PUSH ON (P)	INSIDE CAULK (X)	THREADED (T)	PVC (-30)	ABS (-31)
2"	*10 1/2"	*10 7/8"	*12"	*10 1/2"	*11 1/4"	*11 1/4"
3"	9 1/2"	*10 7/8"	10 5/8"	*10 5/8"	*11 1/4"	*11 1/4"
4"	*10 1/2"	*10 7/8"	10 5/8"	*10 7/8"	*11 1/4"	*11 1/4"

*Indicates outlet size and connection available with transition outlet body only.

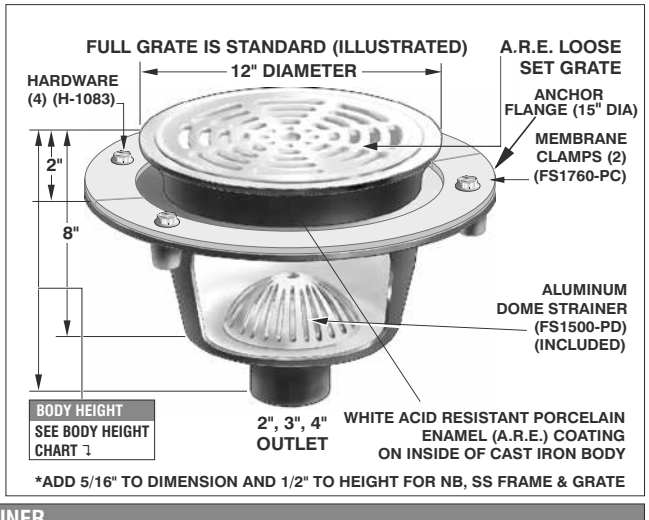

A.R.E. CAST IRON BODY WITH FULL GRATE & ALUMINUM DOME STRAINER

MODEL NUMBER	WT. Lbs	DESCRIPTION	A.R.E. LOOSE GRATE (STANDARD)	NICKEL BRONZE FRAME AND GRATE (-1)	STAINLESS STEEL FRAME AND GRATE (-3)
FS1762,3,4-FL	40.00	12" Round x 8" Deep w/flange	$ 2699.00	$ 4005.00	$ 4005.00

FLOOR SINKS

FS1770 16" x 16" x 9" DEEP FLOOR SINK FS1770

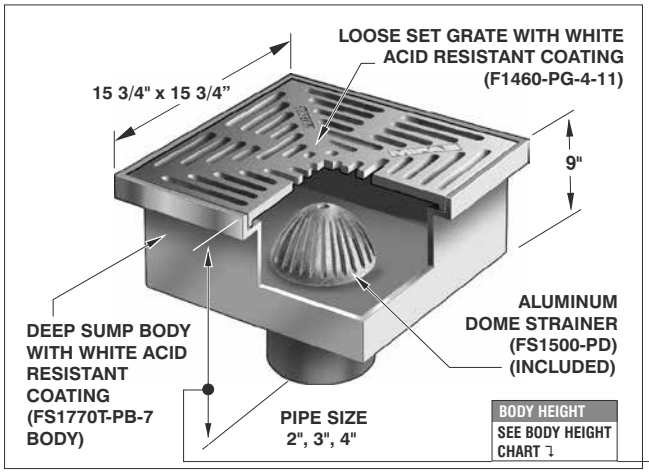

FS1770T (Transition Body) PARTS

FS1770T-PB | F1460-PG-(*)-11 | A3-PG | A1-11 Body

Note: Specify outlet size and connection type.

Dome strainer included with body.

(*) Specify 150 for 1/2 grate, 175 for 3/4 grate or nothing for full grate
Note: For Nickel Bronze grate and frame, specify -TA instead of -PG and specify -1 for Nickel Bronze

FS1770T BODY HEIGHT

PIPE SIZE	NO HUB STANDARD	PUSH ON (P)	INSIDE CAULK (X)	THREADED (T)	PVC (-30)	ABS (-31)
2"	*12"	*12 3/8"	*12 3/4"	*11 1/4"	*11 15/16"	*11 15/16"
3"	*12"	*12 3/8"	*12 3/4"	*11 5/8"	*12 3/4"	*12 3/4"
4"	*12"	*12 3/8"	*12 3/4"	*11 5/8"	*12 3/4"	*12 3/4"

*Indicates outlet size and connection available with transition outlet body only.

FS1770 BODY HEIGHT

PIPE SIZE	NO HUB STANDARD	PUSH ON (P)	THREADED (T)	INSIDE CAULK (X)
ALL	12"	12 3/8"	11 1/4"	12 3/4"

ACID RESISTANT COATED BODY WITH FULL GRATE & ALUMINUM DOME STRAINER

MODEL NUMBER	WT. Lbs	DESCRIPTION	ACID RESISTANT LOOSE GRATE (STANDARD)	NICKEL BRONZE (-1) OR STAINLESS STEEL (-3) FRAME + GRATE (VENEER)
FS1772,3,4	69.00	16" x 16" x 9" Deep with flange	$ 5665.00	$ 7261.00

FS1770 AND FS1770-FL OPTIONAL VARIATIONS:

SUFFIX	DESCRIPTION	PRICE	SUFFIX	DESCRIPTION	LIST PRICE
-5	Sediment bucket (FS1770-SB)	$ 1089.00	-32	Deep seal trap (2", 3", 4" no hub) (MI-950 Series)	See MI-950, pg. 289
-6	Security screws (H-1039A, 4 pcs) (-1, -3 only)	$ 195.00	-51	2 ½" round center grate opening (-1, -3 only)	$ 235.00
-7	Trap seal primer connection	$ 257.00	-69	Stainless Steel Sediment bucket (FS1770-PB-3)	$ 3058.00
-8	Backwater Valve (BV1250 Series) (2", 3", 4")	$ 497.00	-83	Stainless Steel mesh over stainless steel bucket (add to S.S. Bucket)	$ 1234.00
-21	Secondary flat strainer (FD-9600 Series)	$ 78.00	-90NH	No Hub Side Outlet (2", 3" or 4")	$ 481.00
-22	Less Enamel Cast Iron grate **(deduct)**	-$ 500.00	-150	Half grate	No Add
-22	Less Nickel Bronze grate **(deduct)**	-$ 1359.00	-175	3/4 grate	No Add
-22	Less Stainless Steel grate **(deduct)**	-$ 1359.00	-C	Membrane clamp (add to FS1770-FL only)	$ 735.00
-30	PVC socket connection W/A.R.E. Body (2", 3", 4")	No Add	P	Push on outlet (2", 3" or 4")	No Add
-31	ABS socket connection W/A.R.E. body (2", 3", 4")	No Add	T	Threaded outlet (2", 3" or 4")	$ 107.00
			X	Inside caulk outlet (2", 3" or 4")	No Add

FLOOR SINK STANDARD FUNNEL OPTIONAL VARIATIONS:

SUFFIX	DESCRIPTION	A.R.E.	NICKEL BRONZE (-1) STAINLESS STEEL (-3)	SUFFIX	DESCRIPTION	A.R.E.	NICKEL BRONZE (-1) STAINLESS STEEL (-3)
-F4	4" round funnel	$ 247.00	$ 583.00	-F6	6" round funnel	$ 395.00	$ 862.00
-G	4" x 9" oval funnel	$ 583.00	$ 1204.00	-J	3" x 1" oval funnel	$ 276.00	$ 607.00

FS1770-FL 16" x 16" x 9" DEEP FLOOR SINK WITH FLANGE FS1770-FL

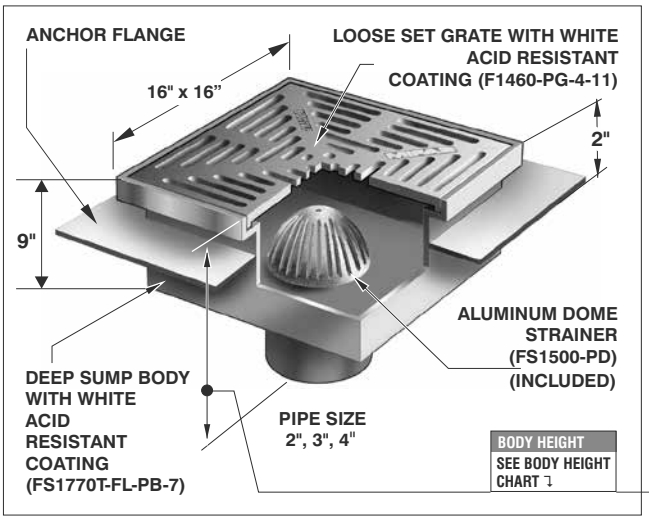

FS1770T-FL (Transition Body) PARTS

FS1770T-FL-PB | F1460-PG-(*)-11 | A3-PG | A1-11 Body

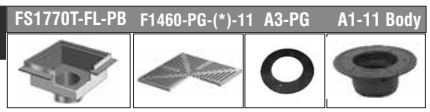

Note: Specify outlet size and connection type.

Dome strainer included with body.

(*) Specify 150 for 1/2 grate, 175 for 3/4 grate or nothing for full grate
Note: For Nickel Bronze grate and frame, specify -TA instead of -PG and specify -1 for Nickel Bronze

FS1770T-FL BODY HEIGHT

PIPE SIZE	NO HUB STANDARD	PUSH ON (P)	INSIDE CAULK (X)	THREADED (T)	PVC (-30)	ABS (-31)
2"	*12"	*12 3/8"	*12 3/4"	*11 1/4"	*11 15/16"	*11 15/16"
3"	*12"	*12 3/8"	*12 3/4"	*11 5/8"	*12 3/4"	*12 3/4"
4"	*12"	*12 3/8"	*12 3/4"	*11 5/8"	*12 3/4"	*12 3/4"

*Indicates outlet size and connection available with transition outlet body only.

FS1770-FL BODY HEIGHT

PIPE SIZE	NO HUB STANDARD	PUSH ON (P)	THREADED (T)	INSIDE CAULK (X)
ALL	12"	12 3/8"	11 1/4"	12 3/4"

ACID RESISTANT COATED BODY WITH FULL GRATE & ALUMINUM DOME STRAINER

MODEL NUMBER	WT. Lbs	DESCRIPTION	ACID RESISTANT LOOSE GRATE (STANDARD)	NICKEL BRONZE (-1) OR STAINLESS STEEL (-3) FRAME+GRATE (VENEER)
FS1772,3,4-FL	69.00	16" x 16" x 9" Deep with flange	$ 6150.00	$ 7746.00

Design and dimensions are subject to modification. Prices do not include applicable taxes. Visit **www.mifab.com** for the most recent product information.
MIFAB®, Inc., 1321 West 119th Street, Chicago, Illinois 60643-5109, USA Toll Free: 1-800-465-2736 • Fax: 1-773-341-3049
All sales subject to MIFAB's® Terms & Warranties. Please refer to inside front cover. sales@mifab.com • Canada Toll Free: 1-800-387-3880

FS1790 24" x 24" x 17" DEEP FLOOR SINK FS1790

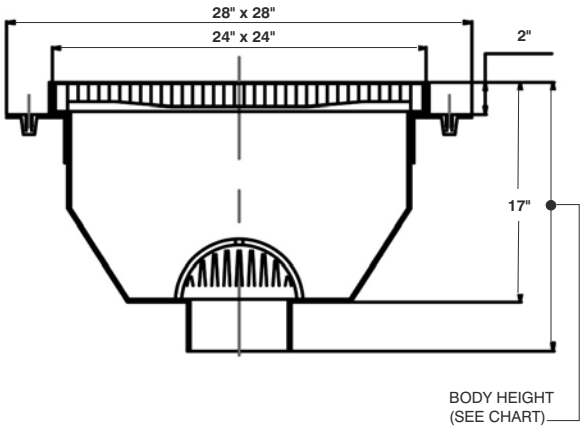

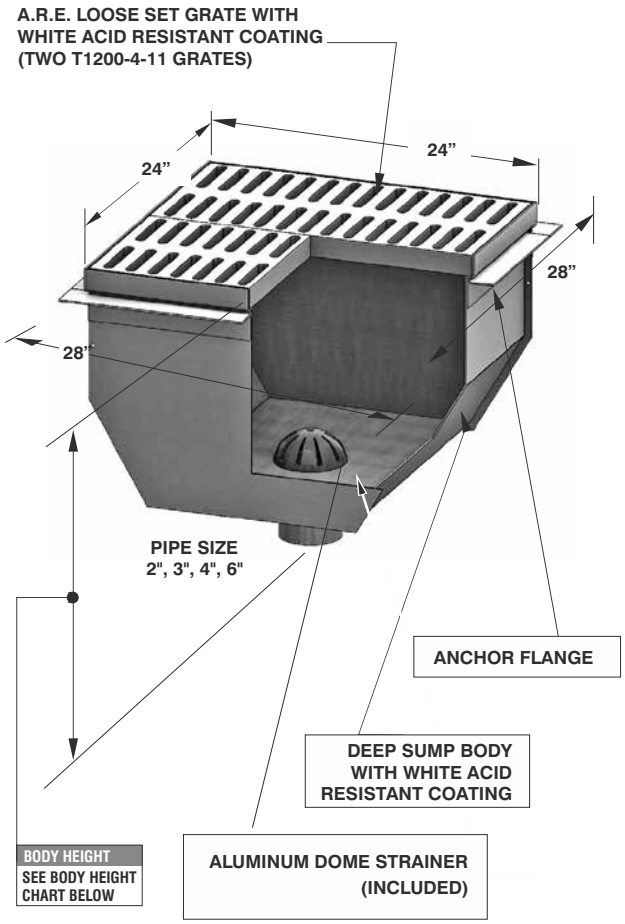

FS1790 BODY HEIGHT

PIPE SIZE	NO HUB STANDARD	PUSH ON (P)	THREADED (T)	INSIDE CAULK (X)	PVC (-30) ABS (-31)
ALL	18 1/2"	19 1/4"	17 1/2"	18 1/2"	18 3/4"

FS1790 OPTIONAL VARIATIONS:

SUFFIX	DESCRIPTION	LIST PRICE	SUFFIX	DESCRIPTION	LIST PRICE
-5	Sediment bucket (FS1790-SB-11)	$ 1575.00	-32	Deep seal trap (2", 3", 4" no hub) (MI-950 Series)	See MI-950, pg. 289
-6	Security screws (H-1039A, 4 pcs) (-1, -3 only)	$ 201.00	-51	2 ½" round center grate opening (-1, -3 only)	$ 330.00
-7	Trap seal primer connection	$ 500.00	-69	Stainless Steel Sediment bucket (FS1790-SB-3)	$ 3056.00
-8	Backwater Valve (BV1250 Series) (2", 3", 4")	$ 497.00	-83	Stainless Steel mesh over stainless steel bucket (add to S.S. Bucket)	$ 2471.00
-12	Galvanized body	$ 1314.00	-90NH	No Hub Side Outlet (2", 3" or 4")	$ 481.00
-13	Galvanized body and grate	$ 1706.00	-150	Half grate	No Add
-21	Secondary flat strainer (FD-9600 Series)	$ 78.00	-175	3/4 grate	No Add
-22	Less Enamel Cast Iron grate **(deduct)**	-$ 1230.00	-C	Membrane clamp	$ 739.00
-22	Less Stainless Steel grate **(deduct)**	-$ 2090.00	P	Push on outlet (2", 3" or 4")	No Add
-30	PVC socket connection W/A.R.E. Body (2", 3", 4")	No Add	T	Threaded outlet (2", 3" or 4")	$ 107.00
-31	ABS socket connection W/A.R.E. body (2", 3", 4")	No Add	X	Inside caulk outlet (2", 3" or 4")	No Add

FLOOR SINK STANDARD FUNNEL OPTIONAL VARIATIONS:

SUFFIX	DESCRIPTION	A.R.E.	NICKEL BRONZE (-1) STAINLESS STEEL (-3)	SUFFIX	DESCRIPTION	A.R.E.	NICKEL BRONZE (-1) STAINLESS STEEL (-3)
-F4	4" round funnel	$ 247.00	$ 583.00	-F6	6" round funnel	$ 395.00	$ 862.00
-G	4" x 9" oval funnel	$ 583.00	$ 1204.00	-J	3" x 1" oval funnel	$ 276.00	$ 607.00

ACID RESISTANT COATED CAST IRON BODY WITH FULL GRATE & ALUMINUM DOME STRAINER

MODEL NUMBER	WT. Lbs	DESCRIPTION	ACID RESISTANT LOOSE GRATE (STANDARD)	STAINLESS STEEL FRAME AND GRATE (VENEER) (-3)
FS1792,3,4,6	250.00	24" x 24" x 17" deep with flange	$ 12,438.00	$ 15,916.00

FS1910-FL 12" X 12" X 4" DEEP STAINLESS STEEL FLOOR SINK WITH FLANGE

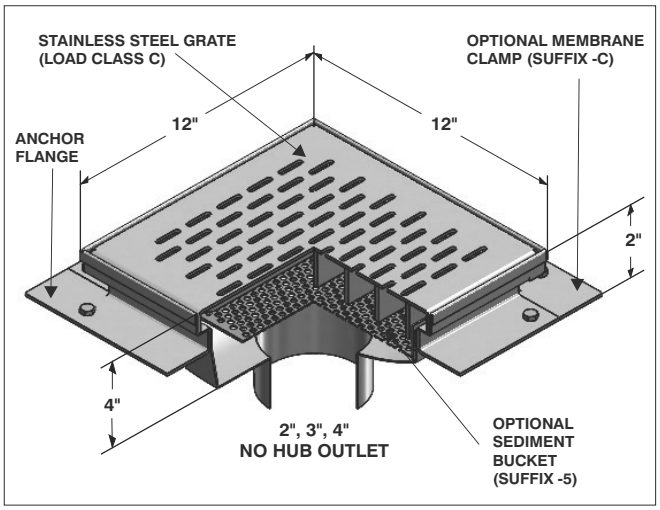

STAINLESS STEEL BODY WITH FULL GRATE & STAINLESS STEEL SECONDARY STRAINER			
MODEL NUMBER	WT. Lbs	DESCRIPTION	FULL GRATE (STANDARD)
FS1912,3,4-FL	18.00	12" x 12" x 4" deep with flange	$ 4970.00

12" X 12" X 6" DEEP STAINLESS STEEL FLOOR SINK WITH FLANGE FS1920-FL

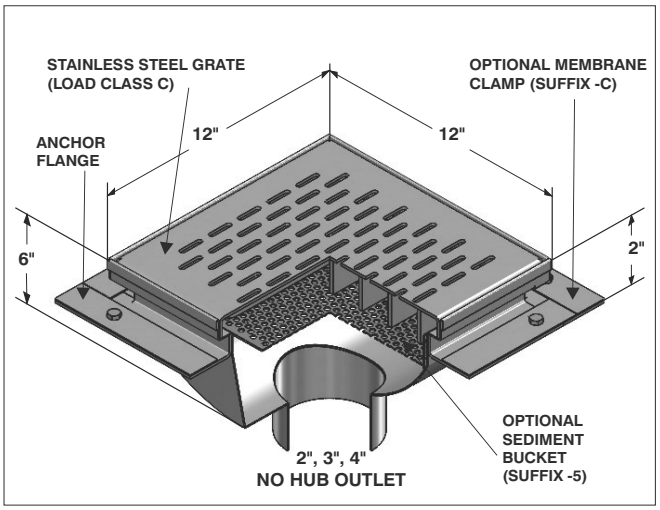

STAINLESS STEEL BODY WITH FULL GRATE & STAINLESS STEEL SECONDARY STRAINER			
MODEL NUMBER	WT. Lbs	DESCRIPTION	FULL GRATE (STANDARD)
FS1922,3,4-FL	20.00	12" x 12" x 6" deep with flange	$ 5055.00

FS1930-FL 12" X 12" X 8" DEEP STAINLESS STEEL FLOOR SINK WITH FLANGE

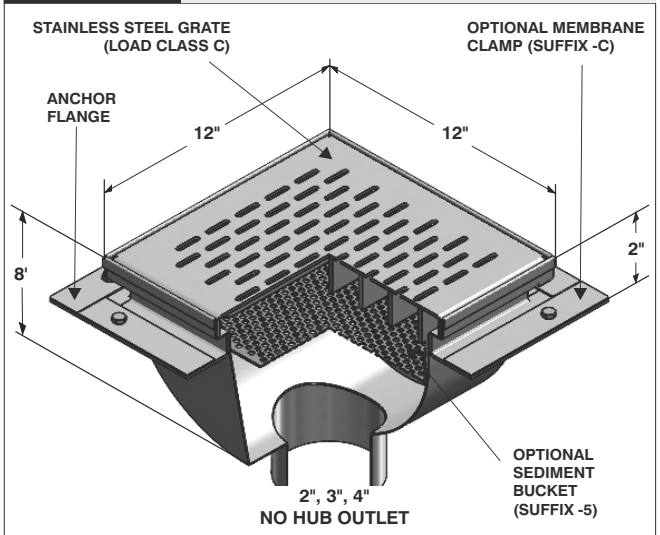

STAINLESS STEEL BODY WITH FULL GRATE & STAINLESS STEEL SECONDARY STRAINER			
MODEL NUMBER	WT. Lbs	DESCRIPTION	FULL GRATE (STANDARD)
FS1932,3,4-FL	21.00	12" x 12" x 8" deep with flange	$ 5120.00

12" X 12" X 10" DEEP STAINLESS STEEL FLOOR SINK WITH FLANGE FS1940-FL

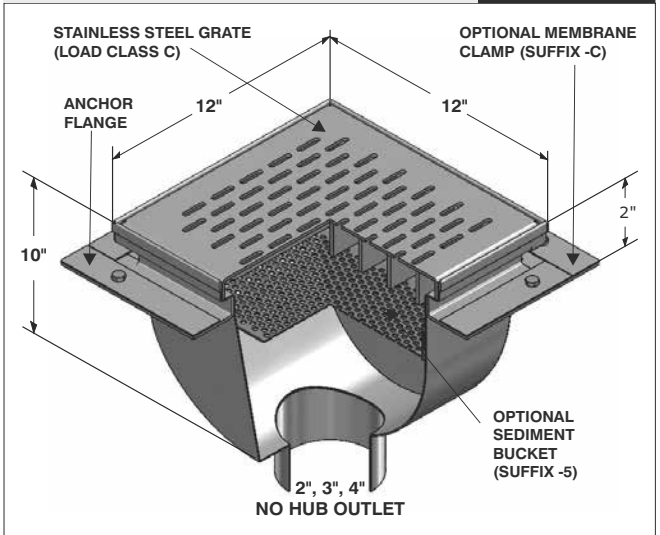

STAINLESS STEEL BODY WITH FULL GRATE & STAINLESS STEEL SECONDARY STRAINER			
MODEL NUMBER	WT. Lbs	DESCRIPTION	FULL GRATE (STANDARD)
FS1942,3,4-FL	21.00	12" x 12" x 10" deep with flange	$ 5580.00

FS1910-FL, FS1920-FL, FS1930-FL and FS1940-FL OPTIONAL VARIATIONS:

SUFFIX	DESCRIPTION	LIST PRICE	SUFFIX	DESCRIPTION	LIST PRICE
-5	Sediment bucket	$ 785.00	-32	Deep seal trap (2", 3", 4", no hub) (MI-950 Series)	See MI-950, pg. 289
-6	Security screws	$ 106.00	-51	2 1/2" round center grate opening	$ 235.00
-7	Trap seal primer connection	$ 257.00	-83	Stainless steel mesh screen over sediment bucket	$ 622.00
-8	Backwater Valve (BV1250 Series) (2", 3", 4")	$ 497.00	-150	Half grate	No Add
-21	Secondary flat strainer (FD-9604)	$ 78.00	-175	3/4 grate	No Add
-22	Less grate **(deduct)**	-$ 645.00	-C	Membrane clamp	$ 254.00
			-Z	Extended wide flange on body (20" x 20" x 1/4" thick)	$ 1724.00

FLOOR SINK STANDARD FUNNEL OPTIONAL VARIATIONS:

SUFFIX	DESCRIPTION	STAINLESS STEEL (-3)	SUFFIX	DESCRIPTION	STAINLESS STEEL (-3)
-F4	4" round funnel	$ 583.00	-F6	6" round funnel	$ 862.00
-G	4" x 9" oval funnel	$ 1204.00	-J	3" x 1" oval funnel	$ 607.00

Design and dimensions are subject to modification. Prices do not include applicable taxes. Visit **www.mifab.com** for the most recent product information.
MIFAB®, Inc., 1321 West 119th Street, Chicago, Illinois 60643-5109, USA Toll Free: 1-800-465-2736 • Fax: 1-773-341-3049
All sales subject to MIFAB's® Terms & Warranties. Please refer to inside front cover. sales@mifab.com • Canada Toll Free: 1-800-387-3880

FS1950 9" ROUND SHALLOW FLOOR SINK FS1950

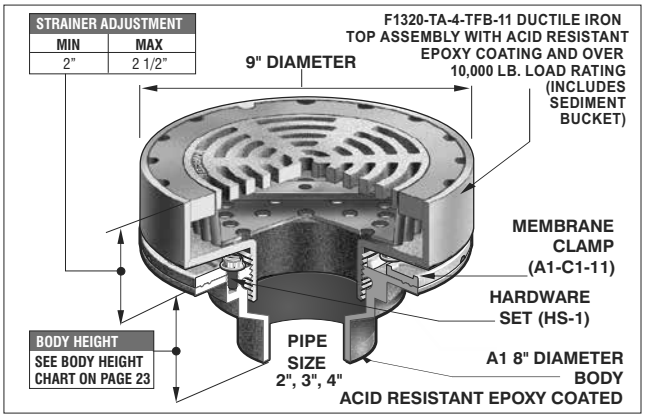

PARTS A1-11 BODY | F1320-TA-(*)-TFB-11 | A1-C1-11 | HS-1

(*) Denotes strainer finish (-1, -3 or -4)

ANSI/ASME RATING

STRAINER	FREE AREA	LOAD RATING
F1320-TA-TFB-4-11	18.0 IN²	OVER 10,000 lbs

*Add 3/8" to 9" Strainer Diameter and 3/16" to Strainer Height for NB or SS Veneer

A.R.E. CAST IRON BODY WITH FULL GRATE

MODEL NO.	WT. LBS.	DESCRIPTION	A.R.E. LOOSE GRATE (STANDARD)	NICKLE BRONZE FRAME & GRATE (-1)	STAINLESS STEEL FRAME & GRATE (-3)
FS1952,3,4	14	9" Round X 5" Deep	$ 1673.00	$ 1994.00	$ 1994.00

FS1950 OPTIONAL VARIATIONS:

SUFFIX	DESCRIPTION	LIST PRICE	SUFFIX	DESCRIPTION	LIST PRICE
-6	Security screws (H-1039A, 4 pcs.) (-1, -3 only)	$ 218.00	-32	Deep seal trap (2", 3", 4" no hub) (MI-950 Series)	See. MI-950, pg. 289
-7	Trap seal primer connection	$ 257.00	-51	2 1/2" round center grate opening (-1, -3 only)	$ 235.00
-8	Backwater Valve (BV1250 Series) (2", 3", 4")	$ 497.00	-69	Stainless steel sediment bucket (FS1750-PB-3)	$ 705.00
-21	Secondary flat strainer (FD-9600 Series)	$ 78.00	-83	Stainless steel mesh screen over stainless steel bucket(Add to S.S. bucket)	$ 405.00
-22	Less Enamel Cast Iron grate **(deduct)**	-$ 254.00	-150	Half grate	No Add
-22	Less Nickel Bronze grate **(deduct)**	-$ 277.00	-175	3/4 grate	No Add
-22	Less Stainless Steel grate **(deduct)**	-$ 277.00	-C	Membrane clamp	$ 243.00
-30	PVC socket connection W/A.R.E. Body (2", 3", 4")	No Add	P	Push on outlet (2", 3", 4")	No Add
-31	ABS socket connection W/A.R.E. body (2", 3", 4")	No Add	T	Threaded outlet (2", 3", 4")	$ 107.00
			X	Inside caulk outlet (2", 3", 4")	No Add

FS1959 FLOOR SINK INSTALLATION STABILIZING PLATE – FOR 8" X 8" FLOOR SINKS FS1959

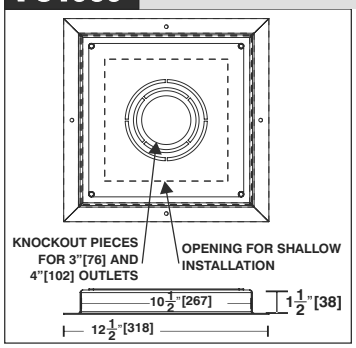

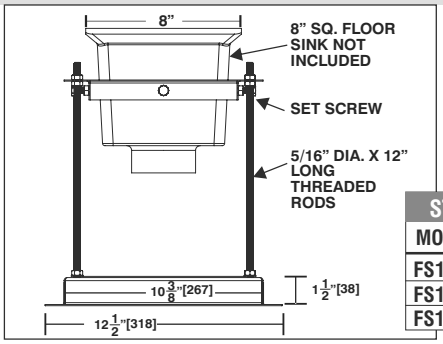

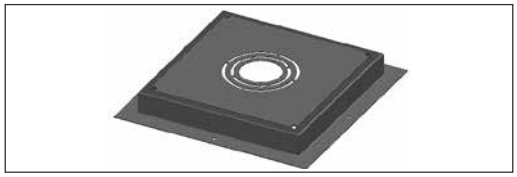

STABILIZING PLATE FOR 8" X 8" FLOOR SINKS

MODEL NO.	PIPE SIZE	PIPE OPENING DIAMETER	LIST PRICE
FS1959-2	2"	2 9/16"	$ 235.00
FS1959-3	3"	3 11/16"	$ 235.00
FS1959-4	4"	4 11/16"	$ 235.00

FS1960 FLOOR SINK INSTALLATION STABILIZING PLATE - FOR 12" x 12" FLOOR SINKS FS1960

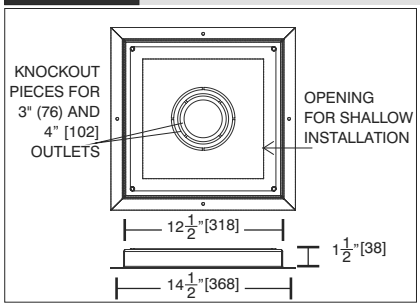

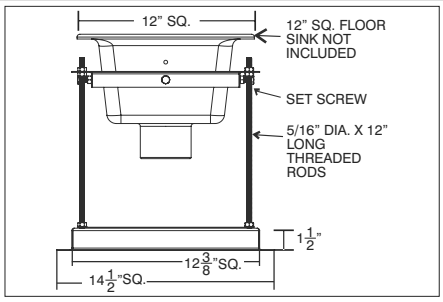

MODEL NO.	PIPE SIZE	PIPE OPENING DIAMETER	LIST PRICE
FS1962	2"	2 9/16"	$ 273.00
FS1963	3"	3 11/16"	$ 273.00
FS1964	4"	4 11/16"	$ 273.00

Description: MIFAB FS1960 Series of floor sink installation stabilization plate. They are manufactured from 16 gauge galvanized steel and painted with an acid resistant red epoxy coating. The plates are made with a variable pipe opening, four support stud holes and four nail holes. They can be used with MIFAB's 12" x 12" floor sinks.

FS1970 8" x 8" x 6" REPLACEMENT STAINLESS STEEL FLOOR SINK LINER FS1970

Description: MIFAB FS1970 Series of Type 304 stainless steel floor sink replacement liner for 8" x 8" x 6" deep floor sinks. Manufactured with internal pipe gasket seal and light duty slotted loose set grate and aluminum dome strainer.

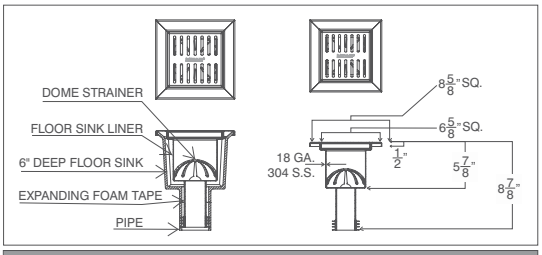

OPTIONAL VARIATIONS		
SUFFIX	DESCRIPTION	LIST PRICE
-5	Sediment Bucket (FS1500-PB)	$ 264.00
-22	Less Stainless Steel grate (deduct)	($198.00)
-150	Half Grate"	No Add
-175	Three Quarter Grate	No Add

MODEL NO.	PIPE SIZE	WT. Lbs.	FREE AREA	LIST PRICE
FS1972	2"	5	12.30"	$ 2163.00
FS1973	3"	5	12.30"	$ 2163.00
FS1974	4"	5	12.30"	$ 2163.00

FS1980 12" x 12" x 6" REPLACEMENT STAINLESS STEEL FLOOR SINK LINER FS1980

Description: MIFAB FS1980 Series of Type 304 stainless steel floor sink replacement liner for 12" x 12" x 6" deep floor sinks. Manufactured with internal pipe gasket seal and light duty slotted loose set grate and aluminum dome strainer.

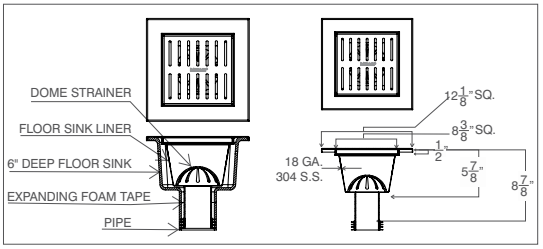

OPTIONAL VARIATIONS		
SUFFIX	DESCRIPTION	LIST PRICE
-5	Sediment Bucket (FS1700-PB)	$ 419.00
-22	Less Stainless Steel grate (deduct)	($198.00)
-150	Half Grate	No Add
-175	Three Quarter Grate	No Add

MODEL NO.	PIPE SIZE	WT. Lbs.	FREE AREA	LIST PRICE
FS1982	2"	6	22.00"	$ 2608.00
FS1983	3"	6	22.00"	$ 2608.00
FS1984	4"	6	22.00"	$ 2608.00

FS1990 12" x 12" x 8" REPLACEMENT STAINLESS STEEL FLOOR SINK LINER FS1990

Description: MIFAB FS1990 Series of Type 304 stainless steel floor sink replacement liner for 12" x 12" x 8" deep floor sinks. Manufactured with internal pipe gasket seal and light duty slotted loose set grate and aluminum dome strainer.

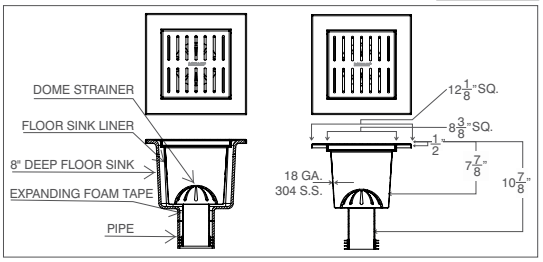

OPTIONAL VARIATIONS		
SUFFIX	DESCRIPTION	LIST PRICE
-5	Sediment Bucket (FS1700-PB)	$ 419.00
-22	Less Stainless Steel grate (deduct)	($198.00)
-150	Half Grate	No Add
-175	Three Quarter Grate	No Add

MODEL NO.	PIPE SIZE	WT. Lbs.	FREE AREA	LIST PRICE
FS1992	2"	7	22.00"	$ 2798.00
FS1993	3"	7	22.00"	$ 2798.00
FS1994	4"	7	22.00"	$ 2798.00

FS2000 12" x 12" x 10" REPLACEMENT STAINLESS STEEL FLOOR SINK LINER FS2000

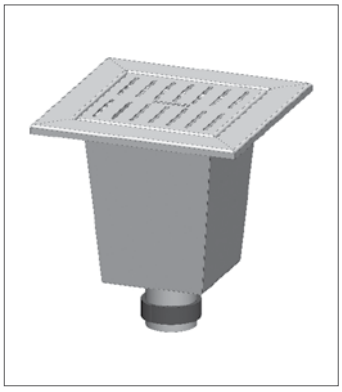

Description: MIFAB FS2000 Series of Type 304 stainless steel floor sink replacement liner for 12" x 12" x 10" deep floor sinks. Manufactured with internal pipe gasket seal and light duty slotted loose set grate and aluminum dome strainer.

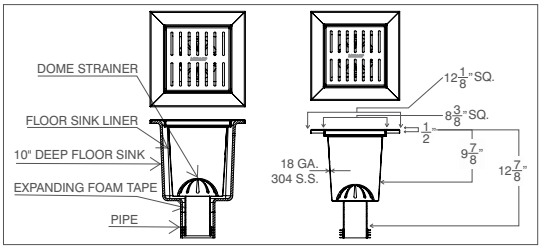

OPTIONAL VARIATIONS		
SUFFIX	DESCRIPTION	LIST PRICE
-5	Sediment Bucket (FS1700-PB)	$ 419.00
-22	Less Stainless Steel grate (deduct)	($198.00)
-150	Half Grate	No Add
-175	Three Quarter Grate	No Add

MODEL NO.	PIPE SIZE	WT. Lbs.	FREE AREA	LIST PRICE
FS2002	2"	7	22.00"	$ 3030.00
FS2003	3"	7	22.00"	$ 3030.00
FS2004	4"	7	22.00"	$ 3030.00

Design and dimensions are subject to modification. Prices do not include applicable taxes. Visit **www.mifab.com** for the most recent product information.
MIFAB®, Inc., 1321 West 119th Street, Chicago, Illinois 60643-5109, USA Toll Free: 1-800-465-2736 • Fax: 1-773-341-3049
All sales subject to MIFAB's® Terms & Warranties. Please refer to inside front cover. sales@mifab.com • Canada Toll Free: 1-800-387-3880

MIFAB®

QuickHub

HEAVY AND REGULAR DUTY
NO HUB COUPLINGS

No Hub Couplings

One and Done.

Fastest installation on the market – fits easily and effortlessly onto pipe and fittings. No need to roll gasket, remove shield or waste time fumbling with a loose shield.

With QuickHub no need to remove the gasket first and roll it over the pipe. The patented hourglass shape design ensures the gasket remains within the shield during shipping and handling and allows the QuickHub to be easily pushed onto the pipe.

US PATENT #10,100,956 | US PATENT #10,253,885 | US PATENT #10,557,578

Features

- **40 % less labor**
  Gasket and shield do not come apart
- **Less skilled labor helper required**
- **Faster installation**
  Complete job quicker to make deadlines
- **Fast Assembly**
  Assembles over cast iron fitting with ease
- **Quick Install**
  No need to peel back gasket and shield
- **Neoprene Material**
  Tested and certified to ASTM C565
- **Testing and Certifications**

  Regular Duty
  - CISPI 310
  - NSF
  - ASTM C1277
  - IAPMO listed

  Heavy Duty
  - ASTM C1540
  - FM 1680
  - IAPMO listed
- **Torque Requirements**
  Same 60-80 lb. torque requirement as regular couplings.
  80-100lb. torque for heavy duty couplings
- **Field Tested**
  Tested on high-rise commercial buildings. Tested to perform on min/max pipe diameters

- **Cast Iron To PVC - Transition**
  The regular duty Quick Hub sizes 1 1/2″, 2″, 3″, 4″, 5″, 6″ and 8″ are third party tested and certified to the ASTM C1460 Standard. They can be used to connect Cast Iron pipe to Plastic, Steel or Extra Heavy Cast Iron pipe.

QuickHub

WWW.MIFAB.COM

R1200 ROOF DRAIN COMMON PARTS

1. Dome strainer. Cast iron part # A2-MD (6" high) illustrated (suffix -M). Standard dome receiver is the A2-PD polydome (7 1/2" high). Manufactured with 125 Sq. inches of free area. Dome receiver is also available in a low profile aluminum design (part # A2-MDL-80, suffix -M-80), in a low profile rough bronze design (part # A2-MDL-81, suffix -81) and in a low profile aluminum design with stainless steel mesh screen assembled around the dome strainer (part # A2-SSD, suffix -83). All of the low profile dome strainers are 4 ½" high. All of MIFAB's roof domes are engineered to lock underneath the tabs in the A2-C3 dome receiver for a secure fit. Specify suffix -6 to vandal proof secure any of the dome strainers to the A2-C3 dome receiver.

2. HS-2 hardware pack. 5/16" threaded rods, nuts and washers are required to assemble the A2-C3 dome receiver and membrane clamp to the A2 roof drain body.

3. A2-C3 dome receiver and membrane clamp. Serves to secure the roof dome to the assembly and also to clamp the waterproofing membrane to the top flange of the A2 roof drain body. Raised grooves on the underside of the A2-C3 match the recessed grooves in the top flange of the A2 body to ensure a sealing grip onto the waterproofing membrane.

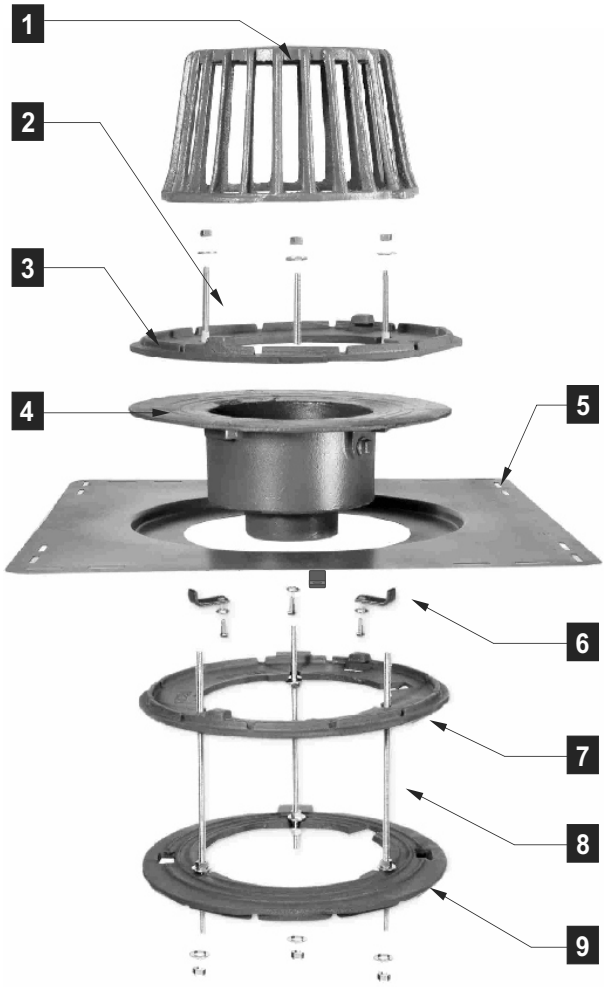

Note: (Reference #2 and #8) Hardware Kits (HS-2 and HS-3) provided contain standard 5/16" all threaded studs. Upon installation, excess rod may be cut to desired length for clean installation.

4. A2 body. Designed with a 15" diameter flange and a narrower and deeper sump than any JaSaWaZ body to:

a) Allow the contractor to cut a smaller diameter penetration in the roof (to better maintain the structural integrity of the roof).

b) Provide more efficient drainage of water since the head pressure in the deep sump of the body when filled with water is greater than in a shallower sump and,

c) Narrower diameter sump requires only three sets of hardware to secure the membrane clamp to the body, thereby saving the contractor 33% installation time compared to any JaSaWaZ roof drain.

MIFAB's A2 bodies are available with no hub, push on, threaded, inside caulk, PVC, ABS and stainless steel outlet connections.

5. A2-BP bearing pan (sump receiver). Manufactured with galvanized steel and painted with a finish. Engineered to recess the top flange of the A2 body into the roof deck to ensure easy flow of water from the roof deck into the sump of the roof drain (suffix -B). Securing slots in each corner permit easy assembly to the roof deck. Shipped one piece per carton for easy handling in warehouses and on the jobsite. The bearing pan should be specified with every roof drain to ensure a correct recessed installation of the roof drain into the roof deck unless the roof drain is required with an adjustable extension. In this case, the roof drain body is elevated off the deck, thereby eliminating the need for a bearing pan. This is a large cost savings compared to JaSaWaZ since their roof drain extension system always has the roof drain body installed into the deck, always requiring the use of the bearing pan.

6. HS-20 hardware pack. Three cast iron painted securing brackets, nuts and washers are shipped standard (no extra charge) packed inside every A2-BP carton. Designed to allow the contractor to assemble the bolts into the tappings on the underside of the A2 body flange, securing the A2-BP to the underside of the A2 body flange with the three cast iron brackets at the same time. The result is a roof drain secured to the A2-BP and also to the roof deck. This can eliminate the costly underdeck clamp and also the labor required to install the underdeck clamp.

7. A2-C3 adjustable extension ring. Installed on top of the roof deck. It is designed to elevate the roof drain body off the deck via the HS-3 hardware to accommodate the thickness of the insulation installed on top of the roof deck. This eliminates the use of any gaskets and o-rings (as required with the JaSaWaZ extension systems) that can cause leak as the contrasting winter and summer weather causes expansion and contraction of gaskets and o-rings. Labor savings are also realized by the contractor with the simple MIFAB adjustable extension system (suffix -E).

8. HS-3 hardware pack. 5/16" threaded rods, nuts and washers are required to elevate the roof drain body off the deck to accommodate the thickness of the insulation installed on top of the roof deck. The HS-3 hardware threads into the tappings on the underside of the roof drain body.

9. A2-C3 underdeck clamp. It is installed underneath the roof deck and is engineered to "lock" the roof drain assembly into the roof deck, thereby reducing pipe vibration and potential damage. Can be eliminated when the MIFAB A2-BP sump receiver is installed with the unique HS-20 hardware pack as described above in point # 6. (suffix -U).

Design and dimensions are subject to modification. Prices do not include applicable taxes. Visit **www.mifab.com** for the most recent product information.
MIFAB®, Inc., 1321 West 119th Street, Chicago, Illinois 60643-5109, USA Toll Free: 1-800-465-2736 • Fax: 1-773-341-3049
sales@mifab.com • Canada Toll Free: 1-800-387-3880
All sales subject to MIFAB's® Terms & Warranties. Please refer to inside front cover.

POLYETHYLENE ROOFGUARD

MAKE ROOF DRAINS UNCLOGGABLE

APPLICATIONS:

* Ideal to replace existing roof drain domes on the roofs of schools, warehouses, factories, office buildings and any other building that has standing water on the roof due to clogged roof drain domes.

RoofGuard ELIMINATES STANDING WATER:

- Patented design increases surface area by up to 5x or more making a RoofGuard protected drain virtually uncloggable. RoofGuard SAVES $$
- RoofGuard works 24/7.
- Eliminates leaks and costly repairs caused by clogged drains.
- RoofGuard will replace any Roof Drain Dome Strainer up to 15” in diameter.
- Installation is fast, simple, and requires no tools.
- Removable Top allows easy access to drain and piping without detaching RoofGuard.

INSTALL IT:

- Clean and remove all dirt, debris, and other loose material in area around the drain where RoofGuard is to be installed. After cleaning, if the area is wet dry it off removing as much moisture as possible.
- Remove and dispose of current drain dome strainer.
- Turn RoofGuard over and fill the Attachment Pods with an exterior adhesive such as Chemlink M-1 or equal. Make sure the Pods are completely full and over flowing with adhesive to properly bond.
- Turn RoofGuard over to install over the drain. Press firmly on top of the Attachment Pods to ensure good adhesion to the roof surface.

See Page 139 for complete roof drains with the RoofGuard

Model RG2016DD illustrated

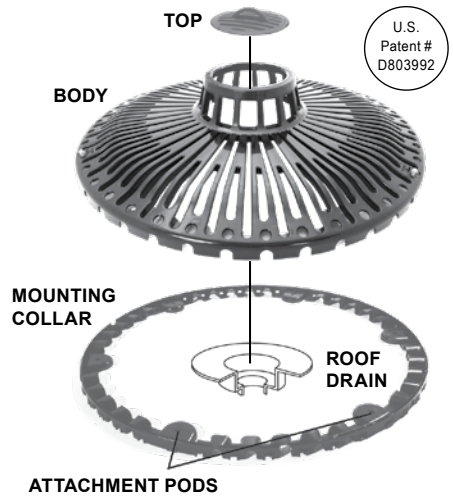

Model # RG2016DD

Illustration of 6 pack polyetheylene RoofGuard counter display. Part # RG2016DD-6

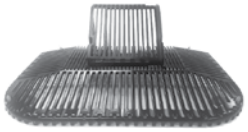

RoofGuard - Plastic scupper drain. Model # RG2016DG

See the current RoofGuard booklet for List Prices and discount structure for the RoofGuard products

DUCTILE IRON ROOFGUARD

In applications where a cast iron RoofGuard is preferred, MIFAB’s model number RG2016DDC cast iron RoofGuard is ideal.

APPLICATIONS:

*Ideal to replace existing roof drain domes on the roofs of schools, warehouses, factories, office buildings and any other building that has standing water on the roof due to clogged roof drain domes. The cast iron RoofGuard ensures a long life. It is also positively bolted to the roof drain body and membrane clamp.

INSTRUCTIONS:

- The RoofGuard will retrofit onto any existing roof drain (MIFAB, Zurn, JR Smith, Wade, Josam or Watts body).
- Remove the existing roof drain dome. Remove the bolts from the membrane clamp ring one at a time and replace them with the provided hardware (MIFAB HS-19).
- Assemble the threaded rods into the body. Add the washer and nut onto the threaded rod, securing the membrane clamp ring to the body. Add another nut and washer to the threaded rod, one inch above the membrane clamp ring (adjusting nut).
- Repeat this process until all bolts on the membrane clamp ring have been removed and replaced.
- Place the RoofGuard over the drain body.
- Add a washer and nut to the top of all of the threaded rods in order to secure the dome. Cut the excess thread off of the threaded rods.

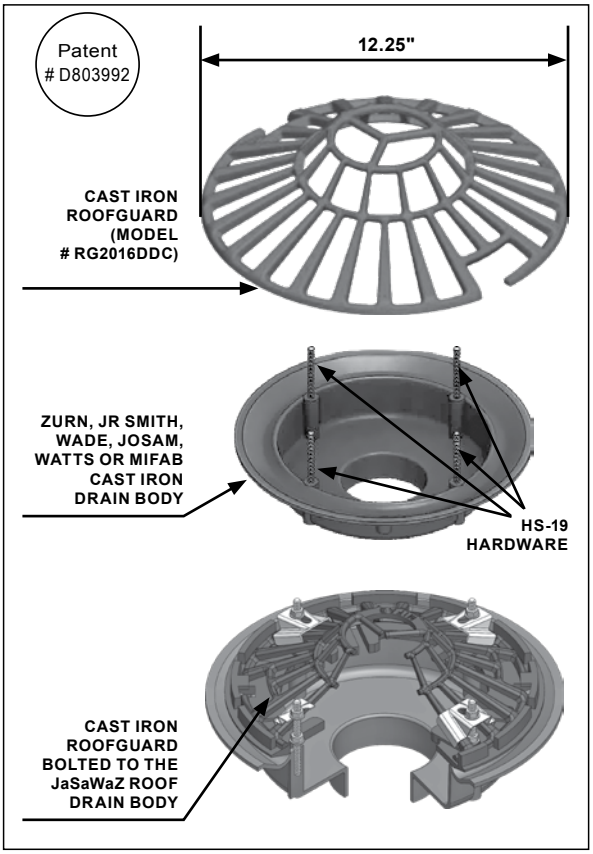

MIFAB® ROOF DRAIN SELECTION GUIDE

The object of equipping a roof drain with an adjustable top via its adjustable extension is to place the top or inlet of the drain at the right height above the structural deck level to accommodate various thicknesses of insulation. This avoids the necessity of tapering or feathering the insulation layer down to the fixed body flange level of the drain causing a loss of insulation value at the drain location.

MIFAB® ACCOMPLISHES THE ADJUSTMENT BY INSTALLING A DECK FLANGE ONTO THE ROOF DECK AND SUPPORTING THE ROOF DRAIN BODY FLUSH OR SLIGHTLY BELOW THE MEMBRANE LEVEL (ABOVE THE INSULATION) UTILIZING THE HS-3 HARDWARE SET. A DECK CLAMP (SUFFIX -U) IS SECURED BENEATH THE DECK ON THE SAME HARDWARE TO ENSURE A RIGID INSTALLATION. IN ALL CASES, THERE IS NO USE OF GASKETS OR MASTIC COATINGS. THIS PRECLUDES THE POSSIBILITY OF ANY LEAKAGE DUE TO BACKUP IN THE DRAINAGE SYSTEM AS A RESULT OF SURCHARGE OR BLOCKAGE.

On Promenade decks, a collar with a cam provides finite adjustment, with the collar being secured by three locking screws to the body of the roof drain. A similar system is used with the R1200-HC in IRMA (Inverted Membrane) systems. You do achieve the precise height with MIFAB roof drains with a minimum of effort. Moreover, MIFAB roof drains provide flexibility in top height often necessary to overcome construction irregularities impossible to compensate for with fixed extension drains.

LOCKING DOME
Once in place stays in place to provide positive protection for the roof drain and drainage system entrance. The vertical perimeter openings provide sufficient free drainage area, in compliance with codes and standards, for prompt and efficient drainage of the roof while protecting the system against entrance of potentially damaging objects. With the open or free area on top, which is merely for flood conditions, the dome has a total free area in excess of 125 square inches.

COMBINED FLASHING CLAMP AND GRAVEL STOP
Features a broad clamping area with ridges that match grooves in the flange of the roof drain body to secure the membrane without the puncturing and troublesome wrinkling often encountered with so-called locking type clamps. The vertical gravel stop prevents rooftop surfacing gravel from washing into the drainage system while permitting drainage of roof through the V-type weirs.

ADJUSTABLE EXTENSION DECK FLANGE (SUFFIX –E)
Adjustable extension is placed on the structural deck level to accommodate various thicknesses of insulation, thereby avoiding the necessity of tapering or feathering the insulation layer down to the fixed body flange level of the drain causing a loss of insulation value at the drain location. MIFAB accomplishes the adjustment by installing a deck flange onto the roof deck and supporting the roof drain body flush or slightly below the membrane level (above the insulation) utilizing the HS-3 hardware set. A Deck clamp (suffix -U) is secured beneath the deck on the same hardware to ensure a rigid installation.

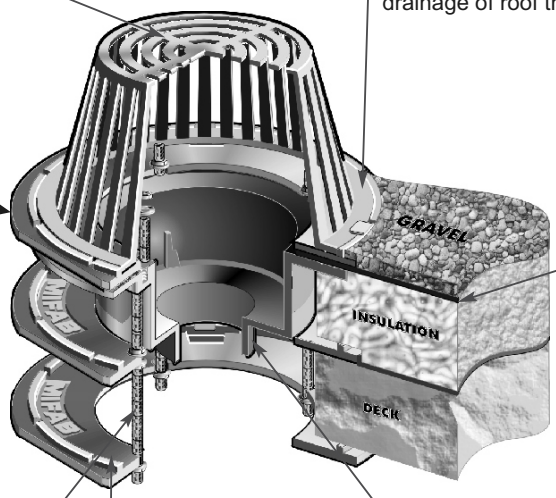

ROOF MEMBRANE

R1200-EU (ILLUSTRATED)

BODY
This basic component made of cast gray iron of commercial drainage fitting quality features a wide top entrance and support flange with large contoured deep sump for optimum flow of water into the roof drainage system.

HARDWARE SET (HS-3)

UNDERDECK CLAMP (SUFFIX –U)
Serves to unite roof drain and roof deck in a common bond through a viselike compression principle that assures a positive permanent installation.
The deck is sandwiched between the drain flange, or sump receiver and the underdeck clamp to preclude membrane or flashing rupture that could occur if the underdeck clamp is not utilized.

Design and dimensions are subject to modification. Prices do not include applicable taxes. Visit **www.mifab.com** for the most recent product information.
MIFAB®, Inc., 1321 West 119th Street, Chicago, Illinois 60643-5109, USA Toll Free: 1-800-465-2736 • Fax: 1-773-341-3049
All sales subject to MIFAB's® Terms & Warranties. Please refer to inside front cover. sales@mifab.com • Canada Toll Free: 1-800-387-3880

MIFAB® ROOF DRAIN SELECTION GUIDE (Cont'd)

Roof drains and accessories combine to form the upstream or entrance terminals of the roof drainage system and as such play a key role in the success or failure of the system. Sizing and placement of roof drains are thoroughly covered in the next section of this catalog. However, prior to sizing and placement of drains, there are certain basic roof design factors that must be considered when selecting and specifying the proper roof drains and accessories for the job. Even though all roofs serve the same basic purpose of protecting the building and its contents from the elements, their design, composition, construction and drainage requirements do vary. Accordingly, when the specifications for the roof drains and accessories are developed, it is of vital importance that all design factors of the roof be addressed and reflected in the products specified to ensure a trouble free, successful installation. Also, insistence upon compliance with the specifications is essential, for departure there could result in a substandard roof drain installation potentially doomed to ultimate failure. Basic roof design factors for consideration with recommended drainage products follow.

ROOF DECKS
ROOF DRAIN SUPPORT SUMP RECEIVERS

Roof decks, owing to the broad range of types and materials of construction, provide perhaps the greatest challenge to the specifier in their quest for the proper method of roof drain support for installation in a given deck. Unless the drain is being installed in a poured concrete deck with drain in place completely surrounded and supported by the deck it will be necessary to provide a deck opening in which to set the drain. It is when such openings are required that drain support becomes the foremost consideration. Even though minimum deck openings are recommended in this catalog for each drain and maximum openings are stated based on the drain's outside sump diameter, maintenance of the actual opening size within the range cannot always be assured. Therefore, a sump receiver, sometimes called drain receiver should be specified with the drain to compensate for deck opening irregularities and provide proper support for the drain. The sump receiver is simply a thin steel ring with a wide, flat flange and depressed center opening into which the roof drain body flange fits, supported by the lip of the opening. In addition to easing the deck opening tolerance requirements, the sump receiver helps to distribute the weight of the drain over a broader surface of the deck.

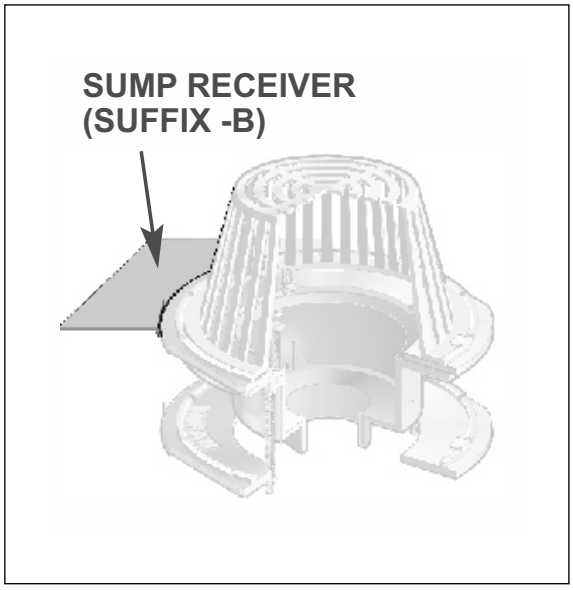

By placing the top of the drain flange at deck level where it should be, the sump receiver helps to avoid the dam-like effect created when the drain flange rests on top of the deck opening. Specify Suffix –B

ROOF DECKS
ROOF DRAIN SECURING UNDERDECK CLAMPS

Proper roof drain support having been resolved through employment of the sump receiver, it becomes necessary to consider a practical method of securing the drain to the deck. If the drain is not in a "poured-in-place," thus secured, installation of an auxiliary securing means must be provided. The most effective and positive means available in response to this requirement is the underdeck clamp (suffix -U). With the drain in place and the sump receiver on top of the deck, the underdeck clamp of circular configuration, surrounding the drain and connected piping, is brought to bear against the bottom of the deck and drawn tightly in place with hardware provided. This in effect sandwiches the deck into a positive union with the drain. Thus secured into place, the roof drain becomes an integral component of the deck with assurance of installation stability and optimum performance in its role as entrance terminal of the roof drainage system. **Specify Suffix –U**

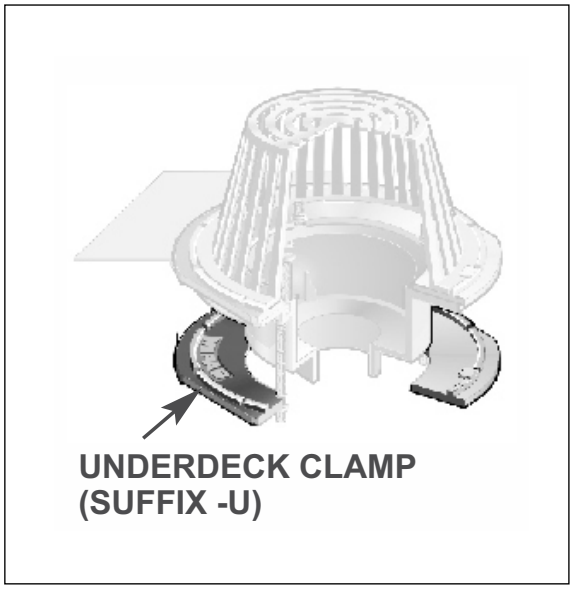

MIFAB® ROOF DRAIN SELECTION GUIDE (Cont'd)

ROOF DECKS

EXPANSION AND CONTRACTION EXPANSION JOINTS

Expansion and contraction, primarily caused by alternating hot and cold environmental conditions, are of particular concern with roof decks and topping materials. Accordingly, these opposing reactions are compensated for in the roof structure by strategically located expansion joints which yield to maintain integrity of the roofing system. Equally important in the preservation of integrity of the roofing system is the roof drain's connection to the drainage piping system. This must permit the drain, an integral component of the roof, to move with the roof during the expansion and contraction process without rupture of either the connection or the watertight bond of drain to roof. In response to this requirement, horizontal offsets in leader piping immediately below the drain connection, which provide a swing joint effect, are employed as are in some cases a side outlet. When bottom outlet roof drains are selected, flexible expansion joints should be used to compensate for expansion and contraction of the roof if the leader cannot be horizontally offset. **Specify Series R1900 Vertical Expansion Joints.**

ROOF DRAINS

APPLIED INSULATION ROOF DRAINS WITH ADJUSTABLE EXTENSION (DECK FLANGE)

The insulation layer, which is normally applied over the structural deck, merits consideration in the selection and specification of the roof drains. A common practice has been to feather or taper the insulation layer down to meet the drain top at the structural deck level. This creates a sump surrounding the drain into which roof topping materials are brought for bonding with the drain flange by means of the flashing clamp. Such sumps, or roof depressions at the drains, even though favored by some designers for their positive drainage aspects, have a downside as receptacles for debris with adverse effects to drainage and potential premature failure of the drain-roof bond. To avoid these potential problems, an adjustable extension is placed on the structural deck level to accommodate various thicknesses of insulation. This avoids the necessity of tapering or feathering the insulation layer down to the fixed body flange level of the drain causing a loss of insulation value at the drain location. MIFAB accomplishes the adjustment by installing a deck flange and supporting the roof drain body flush or slightly below the membrane level utilizing the HS-3 hardware set. **Specify Suffix –E.**

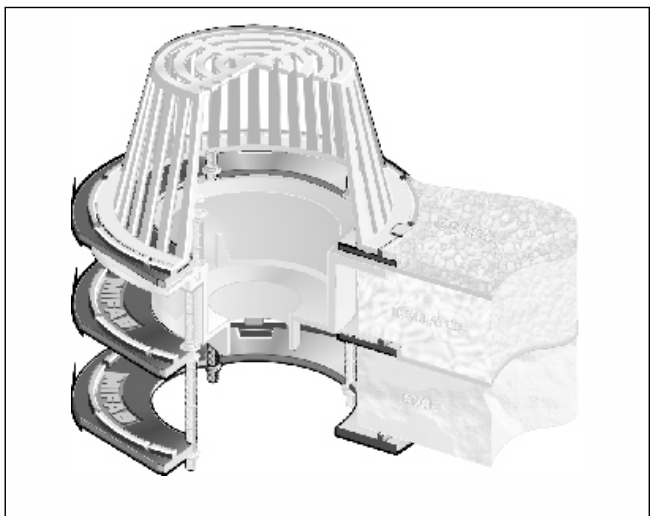

R1200-EU (ILLUSTRATED)

PARAPETS

ROOF PERIMETER PROJECTIONS DRAINAGE

Parapets, normally building outer wall projections above roof elevation, serve important functions in building structure and architectural aesthetics. Parapets also act as barriers against water being swept off the roof during storms, a potentially hazardous condition to passersby and to the building walls themselves. However as an adjunct to the primary roof drainage system, drainage through the parapets at their roof level base or at a predetermined overflow elevation through proper drains or scuppers is recommended, for parapet base-roof level drainage. **Specify Series R1300 or R1320 and for overflow drainage specify Series R1940.**

ROOF DECKS

(IRMA) INSULATED MEMBRANE ROOF DRAINS WITH EXTENSION BALLAST GUARD

The increased popularity of insulated roof membrane assembly (IRMA) type roof construction, sometimes referred to as inverted roof construction (because the membrane is under the insulation layer) has led to the development of roof drains equipped with ballast guards. The primary object of insulating the membrane is to protect it from damaging weather conditions thereby prolonging its integrity . In the insulated roof membrane assembly, the waterproof membrane is applied directly to the structural deck surface. Then specially designed insulation planks with drainage grooves are set in place on top of the membrane. Above this, a percolation layer of aggregate gravel is applied to secure the insulation, while permitting efficient drainage away from the surface. With this arrangement of layers, rainfall quickly percolates through the gravel to the surface of the insulation layer from where over 90 percent gravitates to the roof drain and the balance finds its way between the insulation planks via the grooves to the roof drain. Thus with the bulk of the water arriving at the drain well above waterproof membrane elevation it is desirable to provide a ballast guard on the drain above structural deck level to screen out the undersized aggregate gravel that is carried through the gravel layer with the flowing water. Roof drains equipped with ballast guards are ideally suited for this application and should be specified for installation in all insulated roof membrane assembly type roofs. There are basically two schools of thought as to the proper location

Design and dimensions are subject to modification. Prices do not include applicable taxes. Visit **www.mifab.com** for the most recent product information.
MIFAB®, Inc., 1321 West 119th Street, Chicago, Illinois 60643-5109, USA Toll Free: 1-800-465-2736 • Fax: 1-773-341-3049
All sales subject to MIFAB's® Terms & Warranties. Please refer to inside front cover. sales@mifab.com • Canada Toll Free: 1-800-387-3880

MIFAB® ROOF DRAIN SELECTION GUIDE (Cont'd)

of the dome on ballast guard equipped roof drains. One suggests it be in its normal position assembled to the flashing clamp at structural deck level with the ballast guard surrounding the dome making for a dome recessed drain assembly. The other option is to place the dome and its retaining ring on top of the ballast guard at the surface of the aggregate gravel layer The decision as to which type to specify remains with the engineer, as either type will function satisfactorily for the purpose intended.

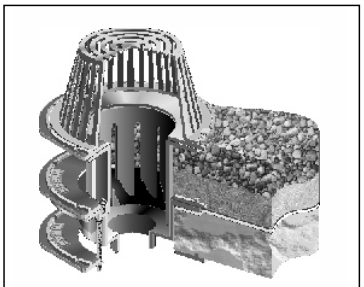

R1200-HC (ILLUSTRATED)

ROOF DECKS ROOF DRAINS WITH WATER DAM

Sometimes, roofs are designed to contain a predetermined amount, thus depth, of water at all times for various reasons. Roof drains for installation in such roofs are equipped with a watertight open top collar either internal or external of the dome, with its flood level at the prescribed elevation above deck to serve as a dam to retain and maintain the desired amount of water on the roof. Excess water, treated for drain sizing purposes as rainfall, floods over the dam and is discharged into the roof drainage system in the normal manner. Specify suffix –R or -W.

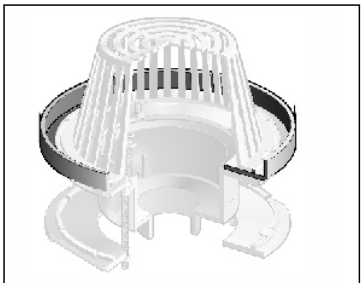

R1200-R (ILLUSTRATED)

ROOF DECKS OVERFLOW DRAINAGE

Most codes require that an overflow system be installed in the event of a blockage or surcharge of the main storm drain system. This may be accomplished by installation of scupper drains (R1300T) with downspout nozzles (R1940). Another method to meet the code requirement is install a completely separate roof drain with external water dams (R1200-R) or internal standpipes (R1200-W). MIFAB has also developed a combination primary and secondary roof drain in one unit requiring a single deck opening. Specify R1150 Series or R1270 Series.

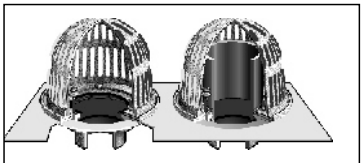

R1150 (ILLUSTRATED)

ROOF DECKS GUTTER AND BALCONY DRAINAGE GUTTER DRAINS

Drainage requirements for gutter and small roof areas, such as balconies and the like, are handled by small compact roof drains referred to as gutter drains. Such drains, owing to their compact size, can readily be installed in confined locations which otherwise may not be properly drained. Specify Series R1400 through R1420.

ROOF DRAIN EXTENSION SYSTEM – WITH BODY ON TOP OF DECK

The typical MIFAB roof drain extension system is made with the –EU suffix (see pages 118 and 119 for an overview of this). Some contractors prefer to adjust the A2 body height above the deck with the A2-BP sump receiver (installed upside down) and the A2-C3 membrane clamp placed on top of the upside down A2-BP. The HS-3 hardware rods push the A2 body above the deck to the insulation height required. The HS-20 brackets and hardware bolt the A2-BP to the A2 body. The HS-3 hardware rods are tightened to the HS-20 brackets with nuts and washers and extend up into the underside tappings of the A2 body flange. The benefit is that the entire system can be put together on the ground and then simply placed over the hole on the roof – saving labor.

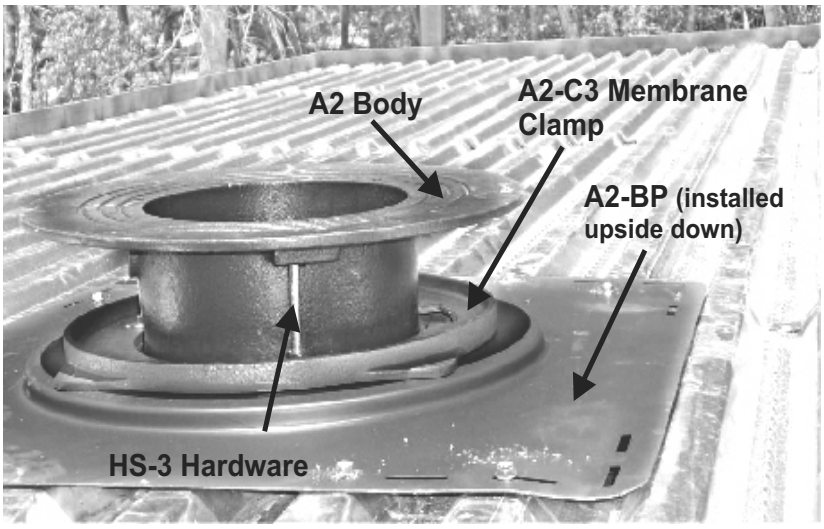

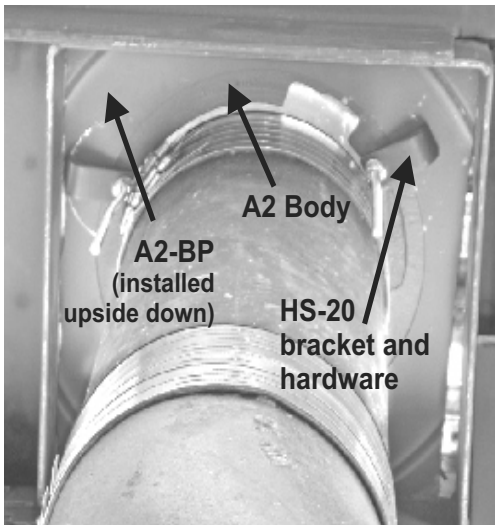

MIFAB® RAINFALL CONSIDERATIONS FOR ROOF DRAINS

Flat roof drainage is accomplished through a system of roof drains, vertical leaders, and horizontal storm drains sized and located in accordance with established criteria in conformance with local plumbing and building codes. Therefore, when considering the design of a roof drainage system, it is recommended that local code authorities be consulted regarding the rainfall rate acceptable in their jurisdiction for design purposes. National rainfall rate information is provided in the chart below, listing rainfall rates in millimeters per hour for selected cities. When the rainfall rate for the locale of the project has been resolved, sizing of the roof drains, leaders and horizontal drainage piping can proceed.

RAINFALL RATES FOR SELECTED CITIES (INCHES PER HOUR)

Based on a storm of one hour duration and a 100 year return period.
Source: Environment Canada-National Climate Data and Information Archive

ALABAMA
Birmingham 3.8
Huntsville 3.6
Mobile 4.6
Montgomery 4.2

ALASKA
Fairbanks 1.0
Juneau 0.6

ARIZONA
Flagstaff 2.4
Nogales 3.1
Phoenix 2.5
Yuma 1.6

ARKANSAS
Fort Smith 3.6
Little Rock 3.7
Texarkana 3.8

CALIFORNIA
Barstow 1.4
Crescent City 1.5
Fresno 1.1
Los Angeles 2.1
Needles 1.6
Sacramento 1.6
San Diego 1.3
San Francisco 1.5

COLORADO
Denver 2.4
Durango 1.8
Grand Junction 1.7
Pueblo 2.5

CONNECTICUT
Hartford 2.7
New Haven 2.8

DELAWARE
Georgetown 3.0
Wilmington 3.1

DISTRICT OF COLUMBIA
Washington 3.2

FLORIDA
Jacksonville 4.3
Key West 4.3
Miami 4.7
Pensacola 4.6
Tampa 4.5

GEORGIA
Atlanta 3.7
Macon 3.9
Savannah 4.3
Thomasville 4.3

HAWAII
Hilo 6.2
Honolulu 3.0

IDAHO
Boise 0.9
Pocatello 1.2

ILLINOIS
Cairo 3.3
Chicago 3.0
Peoria 3.1
Springfield 3.3

INDIANA
Evansville 3.2
Fort Wayne 2.9
Indianapolis 3.1
South Bend 3.0
Terre Haute 3.2

IOWA
Burlington 3.3
Davenport 3.3
Des Moines 3.5
Dubuque 3.3
Sioux City 3.6

KANSAS
Atwood 3.3
Dodge City 3.4
Topeka 3.7
Wichita 3.7

KENTUCKY
Ashland 3.0
Bowling Green 3.2
Lexington 3.1
Louisville 3.2
Middlesboro 2.8
Paducah 3.3

LOUISIANA
Baton Rouge 4.8
Lake Charles 4.7
New Orleans 4.8
Shreveport 3.9

MAINE
Bangor 2.2
Caribou 2.0
Portland 2.4

MARYLAND
Baltimore 3.2
Hagerstown 2.8
Salisbury 3.1

MASSACHUSETTS
Boston 2.5
New Bedford 2.6
Pittsfield 2.8
Springfield 2.7

MICHIGAN
Alpena 2.5
Detroit 2.8
Escabana 2.4
Grand Rapids 2.8
Lansing 2.8
Marquette 2.4
Sault Ste Marie 2.2

MISSISSIPPI
Biloxi 4.7
Columbus 3.9
Jackson 4.0
Natchez 4.4

MISSOURI
Columbia 3.3
Kansas City 3.6
St. Louis 3.3
Springfield 3.4

MONTANA
Billings 1.9
Havre 1.6
Helena 1.5
Missoula 1.3

NEBRASKA
Grand Island 3.5
Omaha 3.8
Sidney 3.2
Valentine 3.2

NEVADA
Carson City 1.1
Elko 1.0
Las Vegas 1.5

NEW HAMPSHIRE
Berlin 2.5
Claremont 2.5
Portsmouth 2.4

NEW JERSEY
Atlantic City 3.0
Newark 3.1
Trenton 3.1

NEW MEXICO
Albuquerque 2.0
Hobbs 3.0
Las Cruces 2.0
Santa Fe 2.0

NEW YORK
Albany 2.6
Binghamton 2.3
Buffalo 2.3
New York 3.0
Syracuse 2.3
Watertown 2.2

NORTH CAROLINA
Asheville, ... 4.1
Charlotte 3.7
Greensboro 3.5
Raleigh 3.7
Wilmington 4.2

NORTH DAKOTA
Bismarck 2.8
Fargo 3.2
Grand Forks 3.0
Williston 2.6

OHIO
Cincinnati 3.0
Cleveland 2.8
Columbus 2.8
Toledo 2.8
Youngstown 2.7
Zanesville 2.8

OKLAHOMA
Oklahoma City 3.8
Tulsa 3.8

OREGON
Medford 1.4
Pendleton 1.0
Portland 1.3

PENNSYLVANIA
Erie 2.6
Harrisburg 2.8
Philadelphia 3.1
Pittsburgh 2.6
Scranton 2.7
Williamsport 2.6

RHODE ISLAND
Providence 2.6

SOUTH CAROLINA
Charleston 4.3
Columbia 4.0
Greenville 4.2

SOUTH DAKOTA
Aberdeen 3.3
Pierre 3.2
Rapid-City 2.9
Sioux Falls 3.6

TENNESSEE
Chattanooga 3.5
Knoxville 3.2
Memphis 3.7
Nashville 3.3

TEXAS
Abilene 3.6
Amarillo 3.5
Brownsville 4.5
Corpus Christi 4.5
Dallas 4.0
El Paso 2.4
Houston 4.6
Lubbock 3.3
Odessa 3.2
San Antonio 4.2
Tyler 3.9

UTAH
Cedar City 1.6
Salt Lake City 1.3

VERMONT
Brattleboro 2.5
Burlington 2.2

VIRGINIA
Bristol 2.7
Charlottesville 2.9
Norfolk 3.4
Richmond 3.3
Roanoke 3.2

WASHINGTON
Bellingham 1.1
Seattle 1.1
Spokane 1.0
Yakima 1.0

WEST VIRGINIA
Charleston 2.8
Elkins 2.7
Parkersburg 2.8

WISCONSIN
Ashland 2.5
Eau Claire 3.0
Green Bay 2.5
La Crosse 3.1
Madison 3.0
Milwaukee 3.0

WYOMING
Casper 1.9
Cheyenne 2.2
Rock Springs 1.3
Sheridan 1.7
Yellowstone Park 1.4

Design and dimensions are subject to modification. Prices do not include applicable taxes. Visit **www.mifab.com** for the most recent product information.
MIFAB®, Inc., 1321 West 119th Street, Chicago, Illinois 60643-5109, USA Toll Free: 1-800-465-2736 • Fax: 1-773-341-3049
All sales subject to MIFAB's® Terms & Warranties. Please refer to inside front cover. sales@mifab.com • Canada Toll Free: 1-800-387-3880

SIZING AND PLACEMENT OF MIFAB ROOF DRAINS

As a first step in the sizing procedure it will be necessary to determine the quantity and placement of the drains required for the roof. Even though there are a number of opinions regarding roof areas that can be effectively drained by one drain, it is recognized that for minimized ponding with adequate drainage, two roof drains are required for roof areas of 10,000 square feet or less, and at least one drain is required per 10,000 square feet of area for larger roofs. Individual judgement will be necessary when considering quantity and placement of drains on roofs where shape and size of sections may require departure from the 10,000 square feet per drain recommendation. In the replacement of drains, uniform distribution is desirable for proper roof drainage. Locating drains within 50 feet of the roof perimeter and no more than 100 feet apart is acceptable practice. Also, careful consideration of roof structural members, dividers, expansion joints, and other projections including rooftop equipment is essential in planning the roof drainage system for adequate drainage of each area of the roof. Consultation with the architect and structural engineer regarding roof details is recommended.

RAINFALL CONVERSION: INCHES PER HOUR TO GPM

For sizing purposes, rainfall-which is expressed in inches per hour, (in the following calculation) - is converted to gallons per minute per square foot of roof area. A one (1) inch per hour rainfall converts to .0104 GPM per square foot. For any given rainfall, multiply the inches per hour by .0104 to arrive at the GPM per square foot of roof area. Then multiply that figure by the square feet of roof area to be drained to arrive at the total gallons per minute to be handled by the drainage system. For example: consider a 4-inch per hour rainfall on a 10,000 square foot roof: **0.0104 x 4 x 10,000 = 416 GPM.**

NOTE: Stated flow rates for roof drains are based on particular test piping configurations and dimensions. The effects of other piping configurations and dimensions on the actual system flow rate shall be evaluated by, and is the responsibility of, the system designer/engineer.

NOTE: For areas that follow the 2015 IPC, please refer to page 120 for additional roof drain sizing requirements.

A2-BP-EU ROOF DRAIN EXTENSION SYSTEM – WITH BODY ON TOP OF DECK

OVERFLOW DRAINAGE

Overflow scuppers and drains are essential components of roof structures. They must be installed in conformance with local codes. Generally, scuppers are installed in adjacent parapet walls no more than 5 inches above the low point of the roof at a ratio of at least one scupper per 20,000 sq. ft. of roof area. Overflow drains of the same size as the roof drains having above roof inlet elevation as specified by code, connected to drain lines independent from the roof drains, may be installed in lieu of scuppers. Their purpose is to drain water from the roof when the primary roof drains are clogged or blocked.

VERTICAL WALLS

Finally, vertical walls that project above and permit storm water to drain on the roof area to be drained must be considered when planning the roof drainage system. An acceptable rule to follow in sizing roof drains, leaders, and horizontal drainage piping is to add one half of the area of any vertical wall that diverts rainwater to the roof to the projected area of that roof. By multiplying the area thus obtained by the GPM/sq. ft. conversion of inches per hour rainfall, the new total GPM discharge requirement is determined for the roof.

A2-BP-EU ROOF DRAIN EXTENSION SYSTEM – WITH BODY ON TOP OF DECK

The typical MIFAB roof drain extension system is made with the -EU suffix (see pages 114 and 115 for an overview of this). Some contractors prefer to adjust the A2 body height above the deck with the A2-BP-EU sump receiver. The A2-BP-EU is bolted to the top of the roof deck through the four slots in each corner of the A2-BP-EU. The HS-3 all thread rods are connected to the top, raised center part of the A2-BP-EU with nuts and washers provided within the HS-3 hardware pack and then can be adjusted to extend the A2 body above the roof deck to accommodate the insulation thickness. The HS-3 threads into tapped bosses that are located on the underside of the A2 body flange. The advantage of using the A2-BP-EU system is that all adjustments to meet the insulation thickness are made above the roof deck. Also, there is no need for an underdeck clamp because the A2-BP-EU is bolted to the roof deck and the A2 body is securely bolted to the top of the A2-BP-EU. The List Price of the A2-BP-EU is **$828.00**. The HS-3 hardware pack is not included and needs to be ordered separately.

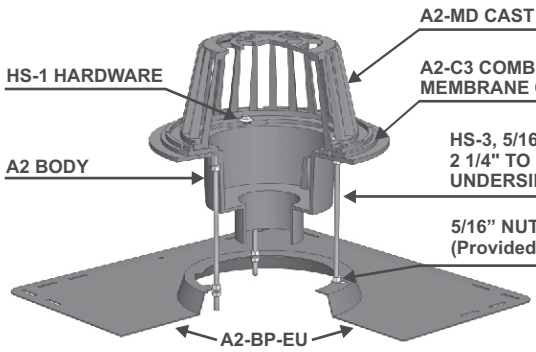

MIFAB® ROOF DRAIN SELECTION GUIDE (Cont'd)

ROOF DECKS
VENT STACKS
VENT CAPS

Even though vent stack and stack vent terminals extending above roof deck level are components of the sanitary drainage system of the building, they are included for consideration in this section because of roof penetration and roof level maintenance requirements. Vents maintain the air-hydraulic balance of the building's sanitary drainage system and in serving that purpose must be maintained open for positive circulation; i.e., the escape of gas and intake of fresh air. Because of the vent terminals exposure to the elements above the roof, it is vulnerable to fouling by various means-leaves, twigs, bird nests, etc., that somehow have a tendency to become lodged therein. To preclude this undesirable condition protective vent caps that permit free circulation of air while protecting the vent terminal against fouling are recommended. **Specify Series R1940.**

ROOF DECKS
VANDALISM
VANDAL PROOFING

Because of their "out of building" rooftop location, the exposed components of the roof drainage system, particularly roof drain domes and grates, are subject to vandalism. This is especially true on roofs having easy access. Domes are occasionally removed and at times flung over the roof edge to the detriment of any unfortunate person below. Also, drains congested with debris are rendered useless. To avoid these unlawful damaging circumstances, vandal proofing of roof drain domes and grates is recommended. Vandal proofing is accomplished by securing these components to their fixed mating parts with vandal proof screws or bolts which require special tools, available only to authorized maintenance personnel, for application and removal. **Specify Suffix -6.**

INTRODUCTION CONTROLLED FLOW ROOF DRAINAGE

In the early 1960's, the pervasive industrialization of the post war boom lead to a new problem for plumbing engineers. As more industrial parks, malls, entertainment facilities, factories and warehousing were built, the load on the local storm sewer system due to extensive paved areas surrounding these buildings for parking as well as their own extensive square footage of roof created an unprecedented demand. Where rain once fell on undeveloped land, and was subsequently absorbed or abated by natural drainage, it now fell on pavement, where no absorption factor meant the total rainfall for vast new areas now had to be conducted by municipal storm sewer systems. To avoid overtaxing the local systems, engineers began to be design flat roofs with controlled flow roof drains. Instead of just getting rid of the rain as fast as it fell, the idea was conceived of using the roof itself as a reservoir from which water could be drained off gradually after a storm abated, thus sparing the storm sewer from being overwhelmed. Roofs could then be built with 6" parapets to not only store the rainwater, but also act as wind break against miniature waves that might be caused on the reservoir in high winds with consequent spillage. On buildings with greater than 6" parapets, scupper drains had to be installed at the 5" level to guard against overloading should the drain system fail.

THE HEART OF THE CONTROLLED FLOW ROOF DRAINAGE SYSTEM, THE ACCUFLOW WEIR

In order to use the roof as a reservoir, it was necessary to design a system where the rate of flow was easily determined for any possible rainfall conditions. The problem is that the rate of flow naturally varies exponentially with the depth of stored water on the roof (a.k.a. head pressure). This made the calculations necessary to design a roof top rain storage system very difficult. **The answer was to design a flow control weir with a parabolic opening which would make the flow off the roof linear instead of exponential.** This meant that once a constant linear flow rate was decided, a weir was designed to admit water to the system at only this fixed rate. The MIFAB system uses a fixed rate of 5 U.S. G.P.M. per inch of water.

Design and dimensions are subject to modification. Prices do not include applicable taxes. Visit **www.mifab.com** for the most recent product information.
MIFAB®, Inc., 1321 West 119th Street, Chicago, Illinois 60643-5109, USA Toll Free: 1-800-465-2736 • Fax: 1-773-341-3049
All sales subject to MIFAB's® Terms & Warranties. Please refer to inside front cover. sales@mifab.com • Canada Toll Free: 1-800-387-3880

ACCUFLOW CONTROLLED FLOW ROOF DRAIN SYSTEM

IN AN UNREGULATED SYSTEM, FLOW IS EXPONENTIALLY PROPORTIONAL TO DEPTH OF RAINWATER ON THE ROOF, AND QUICKLY REACHES THE SATURATION POINT OF THE SYSTEM.

IN A CONTROLLED SYSTEM, FLOW IS LINEARLY PROPORTIONAL TO DEPTH OF RAINWATER ON THE ROOF AND GRADUALLY DRAINS WITHOUT OVERLOADING THE STORM SEWER SYSTEM.

THE SPECIALLY DESIGNED PARABOLIC OPENING OF THE ACCUTROL WEIR CREATES A CONSTANT FLOW OF RAINWATER THAT INCREASES PROPORTIONATELY AT A RATE OF 5 GPM PER INCH OF STANDING WATER UP TO 30GPM ON THE R1200 SERIES AND 15 GPM ON THE R1100 SERIES.

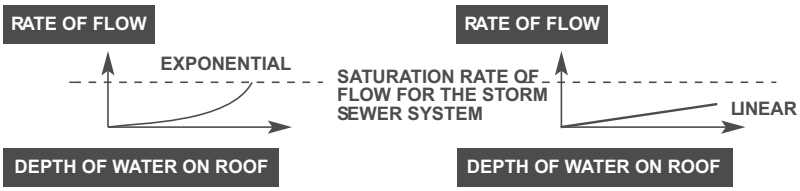

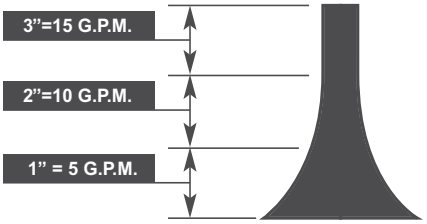

CONTROLLED FLOW ROOF DRAINAGE: Design Considerations.

Three main considerations must guide the design of a controlled flow roof drainage system:

1. It must drain quickly enough to avoid the weight of water building to the point of being an architectural hazard.
2. It must drain slowly enough to prevent overloading the sewage system with the consequent risk of flooding or pollution or both.
3. It must drain down in a reasonable time to minimize the risk of freezing in low temperatures. To meet these requirements, regional rainfall values had to be carefully considered. From these values, it is possible to calculate the number of gallons per minute (GPM) that need to be drained to ensure the buildup in the worst conditions do not exceed a depth of three inches. The consideration of the worst conditions had to be determined from government statistics. The figures used were compiled by the Meteorological Branch of the Department of Transport. The information was combined to produce values that would predict the worst conditions that one could expect over a period of time, in this case ten, twenty-five and fifty years. Hence the expression, "ten year rain" or "fifty year rain".

As well, there are also the local building codes, which specify drain down time (in hours) and maximum head of water on the roof in inches. The maximum drain down time has been determined to be 30 hours to eliminate the possibility of freezing. A constant rate of flow makes it possible, with the use of our Area Selection Table, to quickly determine the number of drains needed for any size of roof where this value is known.

CONTROLLED FLOW ROOF DRAINAGE: Factors that can affect Roof Drain Sizing & Position.

Where a roof area is surrounded by vertical walls, some consideration must be given to the volume of rainwater that these walls might add to the total volume to be drained under "driving rain" conditions:

1. One wall: Add 50% of wall area
2. Two walls: Add 35% of wall area
3. Two walls opposite with different heights: Add 50% of the difference in wall area of that part which extends above the lower wall.
4. Walls on three sides: Add 50% of the inner wall area above the top of the lowest wall(s).

OTHER FACTORS TO CONSIDER:

5. Drains should be located with preference to the downwind side of the roof. In a storm, it is not uncommon for the rainwater level to differ significantly from one side to another due to the effects of high winds.
6. Drains should not be located at columns or other high spots.
7. Rooftop mechanical equipment shall be installed with proper allowances for the "ponding" a control flow roof drain system will create.
8. Parapets should be high enough to prevent spillage or worse, for in winter there is the danger of ice or snow blowing off the roof that must be considered.

CONTROLLED FLOW ROOF DRAINAGE: Sizing Procedure.

Determine the roof area(s) (individual areas when the roof is divided by expansion joints, parapet walls, control joints, etc.) to be drained making the allowances for any of the factors (above) which may affect the total square footage of the roof.

Follow the location and placement guidelines for conventional roof drains as found on page 121, allowing no more than 50 ft. from an edge, no more than 100 ft. apart, and a maximum square footage of 10,000 per drain, etc

Calculate the number of weirs. Divide the total square footage by the area factor for the location of the roof. If the number of weirs is greater than the number of drains from **step B**, add 2-slot weirs to roof drains as necessary, starting with the drains closest to the downwind edges of the roof. If the number of weirs is fractional, round up. If the number of weirs is less than the number of drains, every drain should still be equipped with a one slot weir

Based on the slope and area to be drained by each weir, the maximum flow from all the drains on the roof can be added together to determine vertical leader sizing and horizontal storm sewer requirements.

NEW IPC ROOF DRAIN SIZING REQUIREMENTS

The 2015 IPC (International Plumbing Code) states in Section 1105.2 that "published roof drain flow rate... shall be used to size the storm drainage system... in accordance to Section 1106."

Section 1106 references the ASME Roof Drain Standard A112.6.4. Section 7.2 of A112.6.4 (Flow Testing) states that ***"To determine the flow rate entering the drain at a 2" water depth."***

The IPC is followed by many states that do not use the IAPMO UPC Plumbing Code.
This has caused some confusion for plumbing engineers that specify roof drains. It is a change in how roof drainage is to be sized.

Below is a common question from the plumbing engineering community:
"In the new 2015 International Plumbing Code (IPC), paragraph 1105.2, it now states that in order for plumbing designers/engineers to size roof drains and associated storm drainage piping, we are to use published roof drain flows in conjunction with the IPC Section 1106.

"Does Mifab have flow rates for their roof drains that can be shared and are these flow rates based on drain opening size?"
Yes, MIFAB does. Below are the published MIFAB R1200 Roof Drain Flow Rate test results. The testing on the MIFAB R1200 Roof Drains was done by NSF per ASPE / IAPMO / ANSI Z1034 test procedure

Model #R1202	**Head**	**1"**	**2"**	**3"**	**4"**	**5"**	**6"**
2" Cast Iron Drain with Cast Iron Dome	**GPM**	28	85	122	128	130	133

Model #R1203	**Head**	**1"**	**2"**	**3"**	**4"**	**5"**	**6"**
3" Cast Iron Drain with Cast Iron Dome	**GPM**	25	87	214	225	231	247

Model #R1204	**Head**	**1"**	**2"**	**3"**	**4"**	**5"**	**6"**
4" Cast Iron Drain with Cast Iron Dome	**GPM**	25	90	215	232	240	252

Model #R1205	**Head**	**1"**	**2"**	**3"**	**4"**	**5"**	**6"**
5" Cast Iron Drain with Cast Iron Dome	**GPM**	27	100	230	295	440	720

Model #R1206	**Head**	**1"**	**2"**	**3"**	**4"**	**5"**	**6"**
6" Cast Iron Drain with Cast Iron Dome	**GPM**	15	75	210	250	490	715

Note: MIFAB's stated flow rates for roof drains are based on particular test piping configurations and dimensions. The effects of other piping configurations and dimensions on the actual system flow rate shall be evaluated by, and is the responsibility of, the system designer/engineer.

Design and dimensions are subject to modification. Prices do not include applicable taxes. Visit **www.mifab.com** for the most recent product information.
MIFAB®, Inc., 1321 West 119th Street, Chicago, Illinois 60643-5109, USA Toll Free: 1-800-465-2736 • Fax: 1-773-341-3049
All sales subject to MIFAB's® Terms & Warranties. Please refer to inside front cover. sales@mifab.com • Canada Toll Free: 1-800-387-3880

QUICK GUIDE TO GENERAL ROOF DRAIN SIZING

CHARTS A and B

As an aid to the sizing and placement of MIFAB roof drains, please refer to Charts A and B, which give leader and horizontal storm drain capacities at various slopes, with capacities in GPM and maximum projected roof areas in square feet in each case. It will be noted that a 6-inch leader, thus 6-inch drain, will be indicated by the preceding example. The horizontal storm drain required, depending on slope, would be 6 or 8 inch. However, remembering that two drains are recommended for areas of 10,000 square feet or less, it would be advisable to select smaller drains with total capacity of 416 GPM or more. The maximum projected roof areas in Charts A and B are based on the flow capacity of each pipe size shown. The total of the projected flows from the vertical leaders will determine the size and slope of the horizontal storm sewer required in Chart B.

CHART A:

Vertical leader capacity in GPM with maximum serviceable roof area in square feet based on various anticipated hourly rainfall rates.

VERTICAL LEADER SIZE RAINFALL INCHES CAPACITY (GPM) PER HOUR →		ROOF AREA SQUARE FEET	ROOF AREA SQUARE FEET	ROOF AREA SQUARE FEET	ROOF AREA SQUARE FEET	ROOF AREA SQUARE FEET	ROOF AREA SQUARE FEET
		1	2	3	4	5	6
2	30	2880	1440	960	720	575	480
3	92	8800	4400	2930	2200	1760	1470
4	192	18400	9200	6130	4600	3680	3070
6	563	11600	27000	17995	13500	10800	9000
8	1208	116000	58000	38660	29000	23200	19315

CHART B:

Horizontal storm drain capacity in GPM for slopes given with maximum serviceable roof area in square feet based on system capacity.

	1/8 INCH PER FOOT SLOPE		1/4 INCH PER FOOT SLOPE		1/2 INCH PER FOOT SLOPE	
DRAIN PIPE SIZE (INCHES)	DRAIN CAPACITY (GPM)	MAXIMUM ROOF AREA (SQUARE FEET)	DRAIN CAPACITY (GPM)	MAXIMUM ROOF AREA (SQUARE FEET)	DRAIN CAPACITY (GPM)	MAXIMUM ROOF AREA (SQUARE FEET)
3	34	822	48	1160	69	1644
4	78	1880	110	2650	157	3760
5	139	3340	197	4720	278	6680
6	223	5350	315	7550	446	10700
8	479	11500	679	16300	958	23000
10	863	20700	1217	29200	1725	44100
12	1388	33300	1958	47000	2775	66600
15	2479	59500	3500	84000	4958	81900

ROOF DRAIN SIZING - EXAMPLE

A warehouse is being built in a geographical area where the maximum hourly rainfall (from rainfall map) is 2.8 inches per hour. The building will be 200' x 400' and have a flat roof with no appreciable vertical surface. Roof Drainage System Layout indicated by the sizing example.

Note: For areas that follow the 2015 IPC, please refer to page 120 for additional roof drain sizing requirements.

CALCULATIONS:

- Total area to be drained (200 x 400) ..... **80,000 Sq. ft**.
- Number of drains required **8**
  (From sizing rule, one drain per 10,000 sq. Ft)
- Rainfall conversion from in. per hour GPM..... **2330**
  (0.0104 x 2.8 x 80,000)
- Expected flow from drain **292**
  (GPM ÷ number of drains) (2330 : 8)
- Size of leader (from Chart A)..... **6 inch vertical**
- Size of horizontal storm sewers.....**8,10,12,15, inches**
  (from Chart B 1/4/ foot slope, combined flow of vertical leaders.

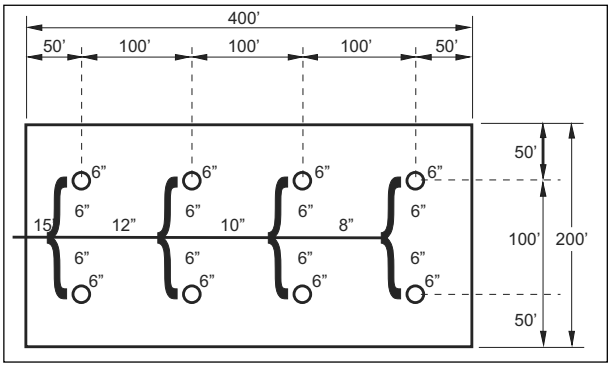

ROOF DRAINS

R1100 STANDARD ROOF DRAIN

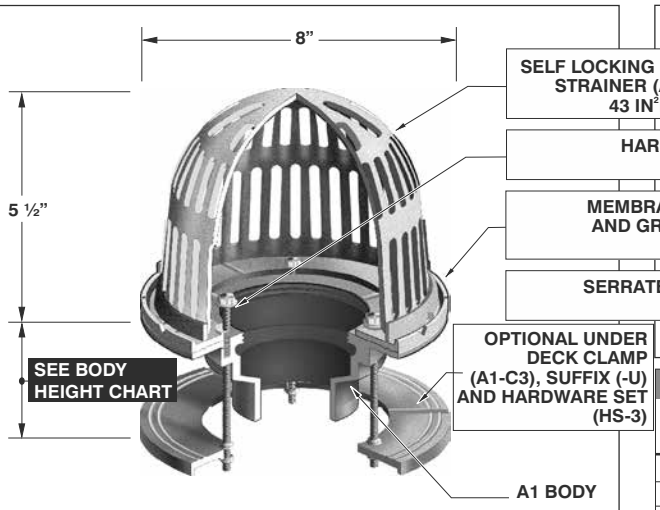

2",3",4", 5", 6" NO HUB OUTLET (STANDARD)
DECK OPENING 6 3/8" WITH SUMP RECEIVER 8 1/2"(216)
(See page 23 for photo of A1-6NH-7 body)

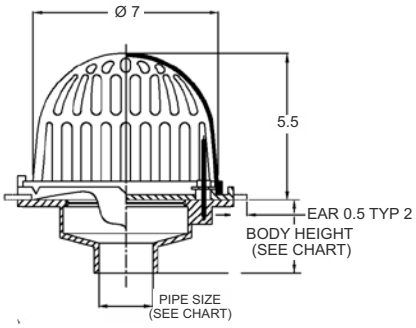

A1 BODY HEIGHT

PIPE SIZE	NO HUB (STANDARD)	PUSH ON (P)	THREADED (T)	INSIDE CAULK (X)	PVC (-30) ABS (-31)
2"	3"	3 3/8"	2 1/4"	3 3/4"	2 5/8"
3"	3"	3 3/8"	2 5/8"	3 3/4"	3 1/4"
4"	3"	3 3/8"	2 5/8"	3 3/4"	3 1/2"
5"	3"	- - -	2 5/8"	6 7/8"	- - -
6"	3 1/2"	6 7/8"	- - -	- - -	- - -

LACQUERED CAST IRON BODY WITH:

MODEL NO.	WT Lbs.	OUTLET SIZE	POLY DOME (STANDARD)	METAL DOME (-M)
R1102, 3, 4	7.00	2", 3", 4"	$ 693.00	$ 816.00

PARTS

A1 BODY	A1-PD	HS-1	A1-C3

R1100, R1100-EU, R1100-F, and R1100-G VARIATIONS: CONTINUE

SUFFIX	DESCRIPTION	LIST PRICE
-6	Vandal proof (Metal dome only)(H-1029)	$ 153.00
-11	Acid resistant epoxy coated body, membrane clamp & dome	$ 995.00
-12	Galvanized metal dome (add to -M price)	$ 189.00
-12A	Galvanized body and membrane clamp	$ 261.00
-13	Galvanized body, membrane clamp and dome (add to -M price)	$ 448.00
-28	Stainless steel body (Type 304) (2", 3", 4" No Hub only)	$ 1581.00

* Add NH to -90 for no hub side outlet - No Add

SUFFIX	DESCRIPTION	LIST PRICE
-30	PVC socket connection body*(2", 3", 4")	No Add
-31	ABS socket connection body*(2", 3", 4")	No Add
-81	Rough bronze dome add (A1-MD-81)	$ 459.00
-83	Stainless steel mesh screen over metal dome (A1-SSD)	$ 459.00
-90	Threaded side outlet (2",3",4") (N/A -30, -31) No Add for -NH	$ 287.00
-B	Sump Receiver add (A1-BP)	$ 337.00

* PVC/ABS Socket bodies available for 2", 3", 4" connection sizes

NOTE: Underdeck clamp for A1-4X-7, A1-4P-7 and all 5" No hub outlet A1 bodies. (Part # A1-C3-4PO).
Underdeck clamp not available with all 5" threaded and Inside caulk and all 6" outlet bodies.

R1100-EU ROOF DRAIN FOR INSULATED ROOF DECK

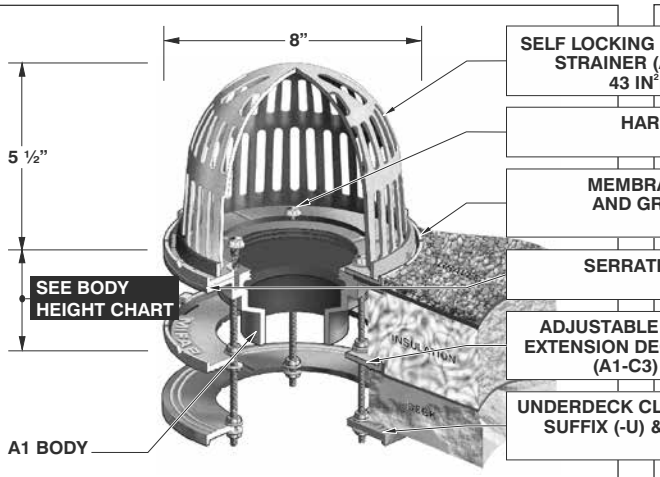

2",3",4", 5", 6" NO HUB OUTLET (STANDARD)
DECK OPENING 6 3/8" WITH SUMP RECEIVER 8 1/2"(216)
(See page 23 for photo of A1-6NH-7 body)

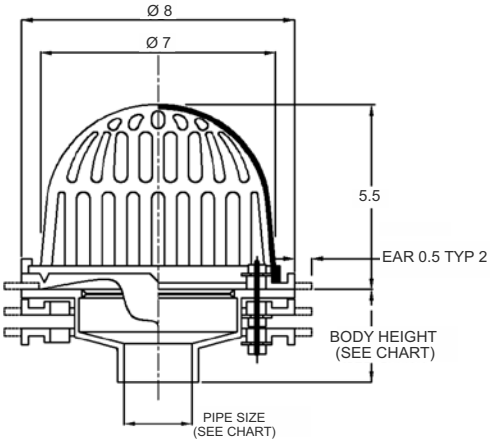

LACQUERED CAST IRON BODY WITH:

MODEL NO.	WT Lbs.	OUTLET SIZE	POLY DOME (STANDARD)	METAL DOME (-M)
R1102, 3, 4-EU	11.50	2", 3", 4"	$ 1339.00	$ 1462.00

PARTS

A1 BODY	A1-PD	A1-C3	HS-1	HS-3
		x3		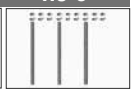

Design and dimensions are subject to modification. Prices do not include applicable taxes. Visit **www.mifab.com** for the most recent product information.
MIFAB®, Inc., 1321 West 119th Street, Chicago, Illinois 60643-5109, USA Toll Free: 1-800-465-2736 • Fax: 1-773-341-3049
All sales subject to MIFAB's® Terms & Warranties. Please refer to inside front cover. sales@mifab.com • Canada Toll Free: 1-800-387-3880

R1100-F ROOF DRAIN WITH PARABOLIC FLOW CONTROL WEIR R1100-F

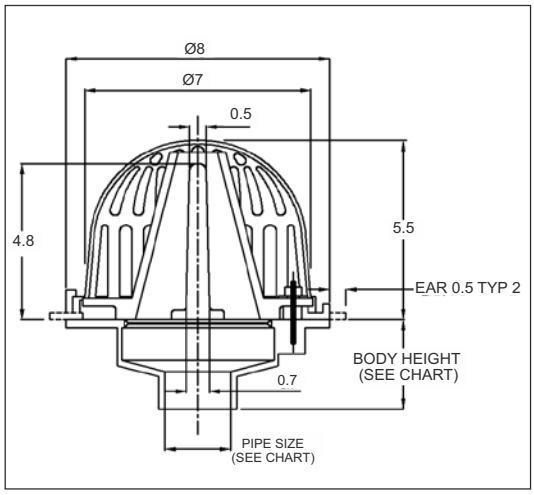

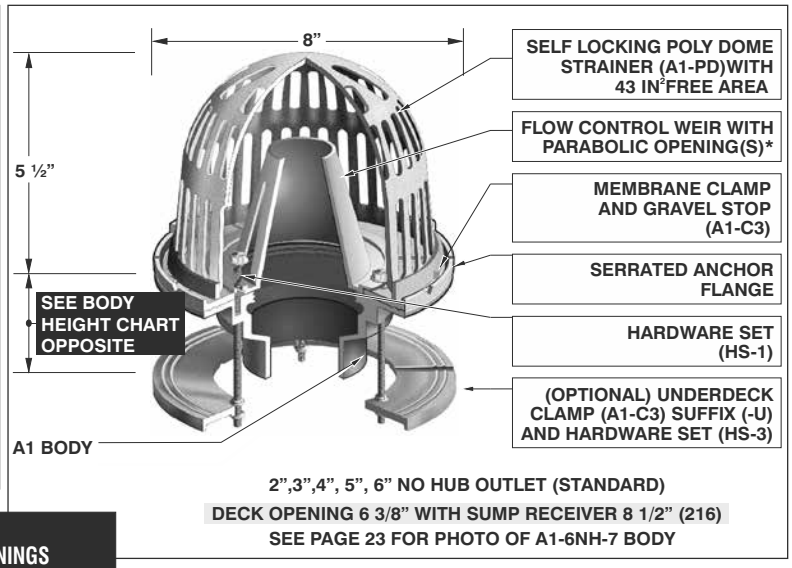

2",3",4", 5", 6" NO HUB OUTLET (STANDARD)
DECK OPENING 6 3/8" WITH SUMP RECEIVER 8 1/2" (216)
SEE PAGE 23 FOR PHOTO OF A1-6NH-7 BODY

*5 GPM flow per inch, per slot.

*** NOTE: SPECIFY -F1, -F2, -F3 FOR REQUIRED NUMBER OF WEIR OPENINGS**

PARTS

A1 BODY	A1-PD	HS-1	A1-C3	A1-F* WEIR

LACQUERED CAST IRON BODY WITH:

MODEL NO.	WT Lbs.	OUTLET SIZE	POLY DOME (STANDARD)	METAL DOME (-M)
R1102, 3, 4-F	9.75	2", 3", 4"	$ 1258.00	$ 1381.00

R1100, R1100-EU, R1100-F AND R1100-G OPTIONAL VARIATIONS CONTINUED FROM PAGE 122

SUFFIX	DESCRIPTION	LIST PRICE	SUFFIX	DESCRIPTION	LIST PRICE
-E	Adjustable extension	$ 449.00	-U	Underdeck clamp (A1-C3) (2", 3", 4" and 5" NH)	$ 196.00
-EG	Galvanized adjustable extension	$ 854.00	-W	Adjustable water dam (W-31)	$ 255.00
-F1,-F2,-F3	Accuflow (parabolic weir)(A1-F1,A1-F2,or A1-F3)	$ 565.00	-W-1	Waterproofing flange (A1-W-1)	$ 384.00
-G	Ballast guard (A1-BG)	$ 604.00	-Z	Extended wide flange on body (13" Dia. x 1/8" thick)	$1724.00
-JC	Ballast guard with secondary clamp	$ 800.00	X	Inside caulk outlet (2", 3", 4")	No Add
-M	Metal dome (A1-MD) (to poly dome)	$ 123.00	5	5" No hub outlet	$ 707.00
P	Push on outlet	No Add	5T	5" Threaded outlet	$ 707.00
-R	2" External water dam (A1-WD)	$ 255.00	5X	5" Inside caulk outlet	$ 707.00
T	Threaded outlet (2", 3", 4")	$ 107.00	6	6" No hub outlet (Not available with -U)	$ 707.00
			6P	6" Push on outlet* (Not available with -U)	$ 707.00

* Specify POG-6 for 6" C.I. pipe and POG-6-PVC for 6" PVC pipe. 2", 3", 4" sizes use same gasket.

R1100-G ROOF DRAIN WITH BALLAST GUARD FOR I.R.M.A. ROOFS R1100-G

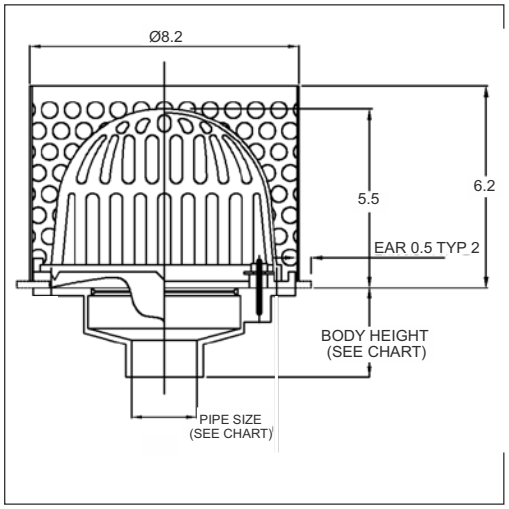

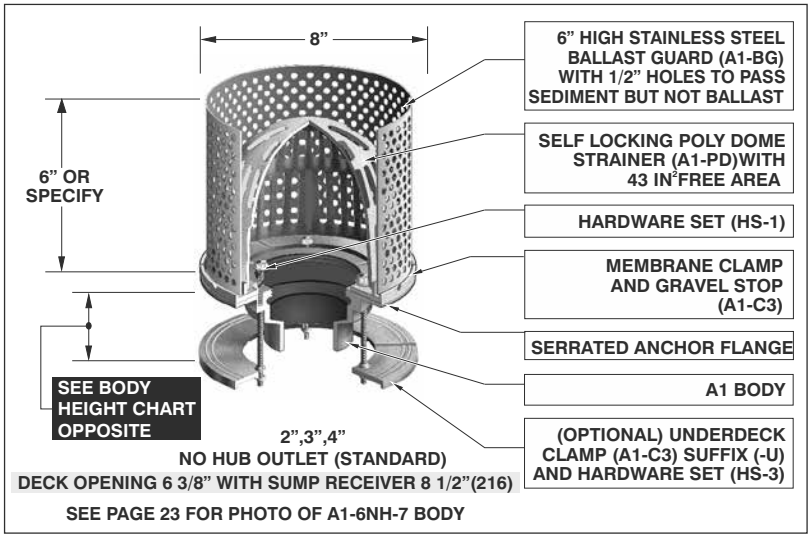

2",3",4"
NO HUB OUTLET (STANDARD)
DECK OPENING 6 3/8" WITH SUMP RECEIVER 8 1/2"(216)
SEE PAGE 23 FOR PHOTO OF A1-6NH-7 BODY

PARTS

A1 BODY	A1-PD	HS-1	A1-C3	A1-BG
				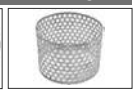

LACQUERED CAST IRON BODY WITH:

MODEL NO.	WT Lbs.	OUTLET SIZE	POLY DOME (STANDARD)	METAL DOME (-M)
R1102, 3, 4-G	8.00	2", 3", 4"	$ 1297.00	$ 1420.00

R1100-JC ROOF DRAIN WITH S.S. BALLAST GUARD FOR I.R.M.A. ROOFS R1100-JC

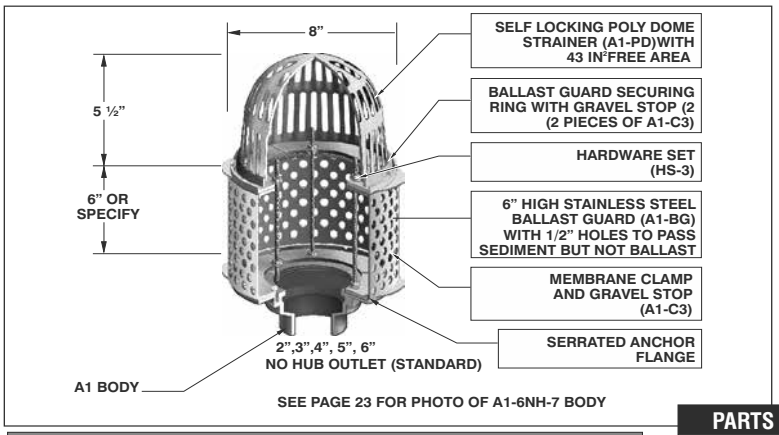

SEE PAGE 23 FOR PHOTO OF A1-6NH-7 BODY

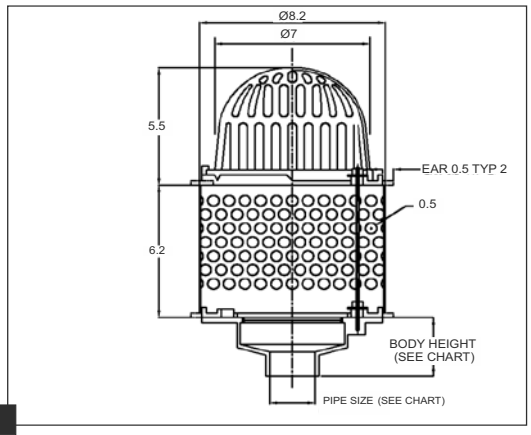

LACQUERED CAST IRON BODY WITH:				
MODEL NO.	WT Lbs.	OUTLET SIZE	POLY DOME (STANDARD)	METAL DOME (-M)
R1102, 3, 4-JC	10.50	2", 3", 4"	$ 1493.00	$ 1616.00

PARTS

A1 BODY	A1-PD	A1-C3	HS-3	A1-BG
		X3		

R1100-JC, R1100-PJ, R1100-PR, R1100-RS, OPTIONAL VARIATIONS:					
SUFFIX	DESCRIPTION	LIST PRICE	SUFFIX	DESCRIPTION	LIST PRICE
-6	Vandal proof (Metal dome only)(H-1029)	$ 153.00	-G	Ballast guard (A1-BG)	$ 604.00
-11	Acid resistant epoxy coated body, membrane clamp & dome	$ 995.00	-JC	Ballast guard with secondary clamp (not with R 1100-PJ)	$ 800.00
-12	Galvanized metal dome (add to -M Price)	$ 189.00	-M	Metal dome (to poly dome)	$ 123.00
-12A	Galvanized body and membrane clamp	$ 261.00	P	Push on outlet	No Add
-13	Galvanized body, membrane clamp and dome (add to -M price)	$ 448.00	-R	2" External water dam (A1-WD)	$ 255.00
-28	Stainless steel body (Type 304) (2", 3", 4" No Hub only)	$ 1581.00	T	Threaded outlet (2", 3", 4")	$ 107.00
-30	PVC socket connection body*(2", 3", 4")	No Add	-U	Underdeck clamp (A1-C3) (2", 3", 4", 5" NH)	$ 196.00
-31	ABS socket connection body*(2", 3", 4")	No Add	-W	Adjustable water dam (W-31)	$ 255.00
-81	Rough bronze dome(A1-MD-81)	$ 459.00	-W-1	Waterproofing flange (A1-W-1)	$ 384.00
-83	Stainless steel mesh screen over metal dome (A1-SSD)	$ 459.00	-Z	Extended wide flange on body (13"Dia. x 1/8 thick)	$ 1724.00
-90	Threaded side outlet (2",3",4") (N/A -30, -31) No Add for -NH	$ 287.00	X	Inside caulk outlet	No Add
-B	Sump Receiver (A1-BP)	$ 337.00	5	5" No hub outlet	$ 707.00
-E	Adjustable extension (DD-50 for -PS, -PR, RS)	$ 449.00	5T	5" threaded outlet	$ 707.00
-EG	Galvanized adjustable extension	$ 854.00	5X	5" Inside caulk outlet	$ 707.00
-F1,-F2,-F3	Accuflow (parabolic weir) (R1100-JC ONLY)	$ 565.00	6	6" No hub outlet (Not available with -U)	$ 707.00
			6P	6" Push on outlet* (Not available with -U)	$ 707.00

* Add NH to -90 for no hub side outlet - No Add

* PVC/ABS Socket bodies available for 2", 3", 4" connection sizes

NOTE: Underdeck clamp for A1-4X-7, A1-4P-7 and 5" NH outlet A1 bodies. (Part # A1-C3-4PO). Underdeck clamp not available with all 5" threaded and inside caulk and all 6" outlet bodies.

R1100-PJ PROMENADE DECK DRAIN WITH S.S. BALLAST GUARD R1100-PJ

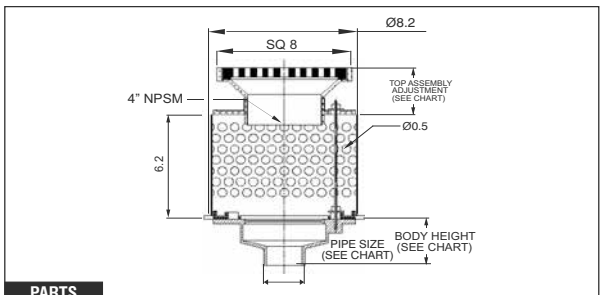

PARTS

A1 BODY	A1-C3	A1-BG	F1420-TA-4	A1-C2	HS-3
	x2	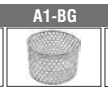			

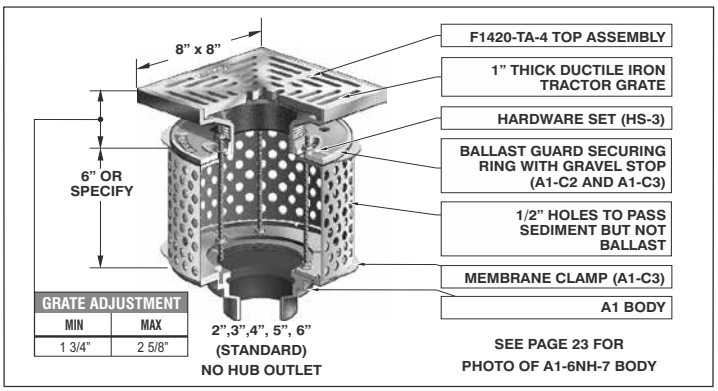

GRATE ADJUSTMENT	
MIN	MAX
1 3/4"	2 5/8"

***ADD 1/2" TO DIM. & 3/16" TO HEIGHT FOR NB, SS FRAME & GRATE**

Note: Specify suffix -5 for cast iron sediment bucket (A1-MB) and add **$185.00**

LACQUERED CAST IRON BODY WITH:					
MODEL NO.	WT Lbs.	OUTLET SIZE	DUCTILE IRON (-4)	NICKEL BRONZE (VENEER) (-1)	STAINLESS STEEL (VENEER) (-3)
R1102, 3, 4-PJ	20.50	2", 3", 4"	$ 1683.00	$ 2248.00	$ 2248.00

ROOF DRAINS

Design and dimensions are subject to modification. Prices do not include applicable taxes. Visit **www.mifab.com** for the most recent product information.
MIFAB®, Inc., 1321 West 119th Street, Chicago, Illinois 60643-5109, USA Toll Free: 1-800-465-2736 • Fax: 1-773-341-3049
All sales subject to MIFAB's® Terms & Warranties. Please refer to inside front cover. sales@mifab.com • Canada Toll Free: 1-800-387-3880

R1100-PR PROMENADE DECK DRAIN

R1100-PR

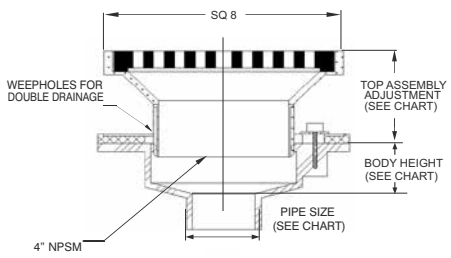

Note: Specify suffix -5 for cast iron sediment bucket (A1-MB) and add **$185.00**

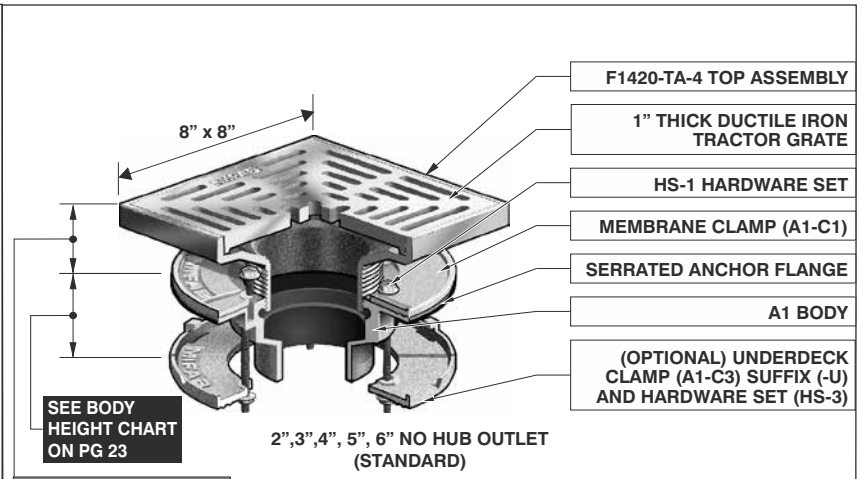

GRATE ADJUSTMENT	
MIN	MAX
1 3/4"	2 5/8"

*ADD 1/2" TO DIM. & 3/16" TO HEIGHT FOR NB, SS FRAME AND GRATE

SEE PAGE 23 FOR PHOTO OF A1-6NH-7 BODY

SEE PAGE 124 FOR OPTIONAL VARIATIONS

LACQUERED CAST IRON BODY WITH:					
MODEL NO.	WT Lbs.	OUTLET SIZE	DUCTILE IRON (-4)	NICKEL BRONZE (VENEER) (-1)	STAINLESS STEEL (VENEER) (-3)
R1102, 3, 4-PR	15.50	2", 3", 4"	$ 1069.00	$ 1626.00	$ 1626.00

PARTS

A1 BODY	A1-C1	HS-1	F1420-TA-4

R1100-RS CONDENSATE RECEPTOR DRAIN

R1100-RS

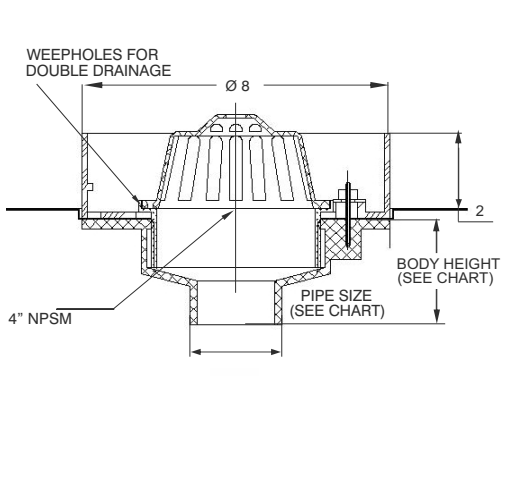

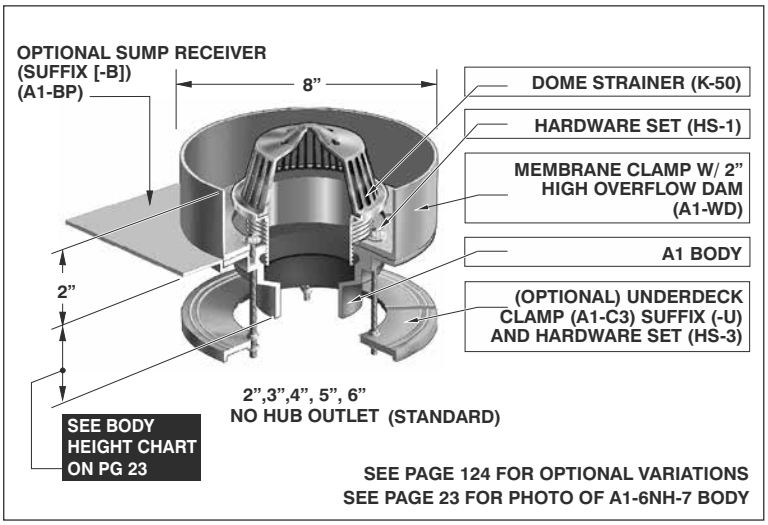

SEE PAGE 124 FOR OPTIONAL VARIATIONS
SEE PAGE 23 FOR PHOTO OF A1-6NH-7 BODY

PARTS

A1 BODY	A1-WD	K-50	HS-1

R1100-RS OPTIONAL VARIATIONS:		
SUFFIX	DESCRIPTION	LIST PRICE
-1	Nickel bronze dome strainer (part # K-1)	$ 373.00
-3	Stainless steel dome strainer (part # K-3)	$ 373.00

LACQUERED CAST IRON BODY WITH:			
MODEL NO.	WT Lbs.	OUTLET SIZE	CAST IRON DOME (-M)
R1102, 3, 4-RS	9.00	2", 3", 4"	$ 772.00

R1100-90 ROOF DRAIN WITH SIDE OUTLET R1100-90

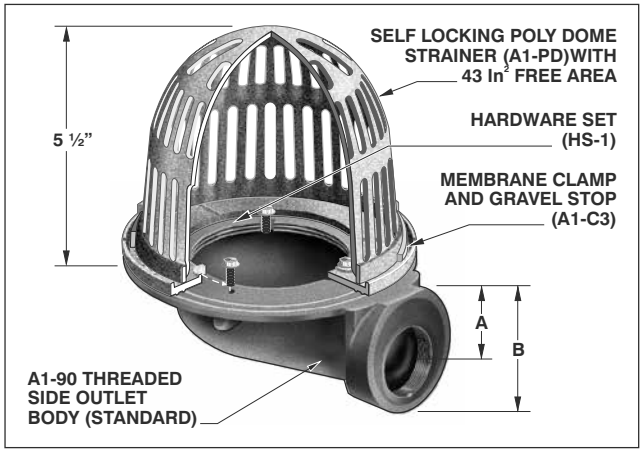

A1-2, 3, 4-90-NH

ADD SUFFIX - NH FOR OPTIONAL NO HUB OUTLET NO ADD.

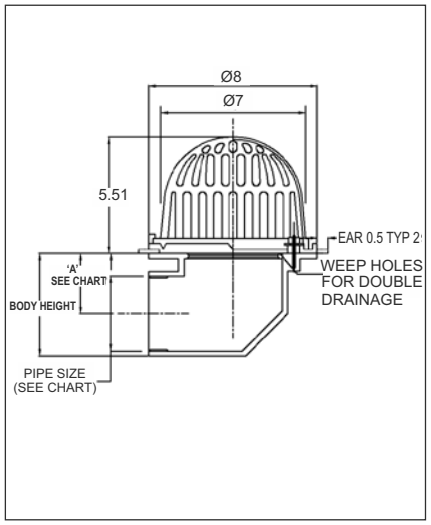

BODY HEIGHT		
PIPE SIZE*	A	B
2" NH* or T	2 15/16"	3 7/8"
3" NH* or T	3"	4 3/8"
4" NH* or T	3 1/4"	6"

LACQUERED CAST IRON BODY WITH:				
MODEL NO.	WT Lbs.	THREADED OUTLET SIZE	POLY DOME (STANDARD)	METAL DOME (-M)
R1102, 3, 4-90	11.50	2", 3", 4"	$ 980.00	$ 1103.00

PARTS | **† 2", 3", 4" THREADED OUTLET**

A1-(†)T-90	A1-PD	A1-C3	HS-1

NOTE: Specify part number A1-C3-CO for underdeck clamp with cutaway side

R1150 COMBINED ROOF DRAIN AND SECONDARY OVERFLOW SYSTEM

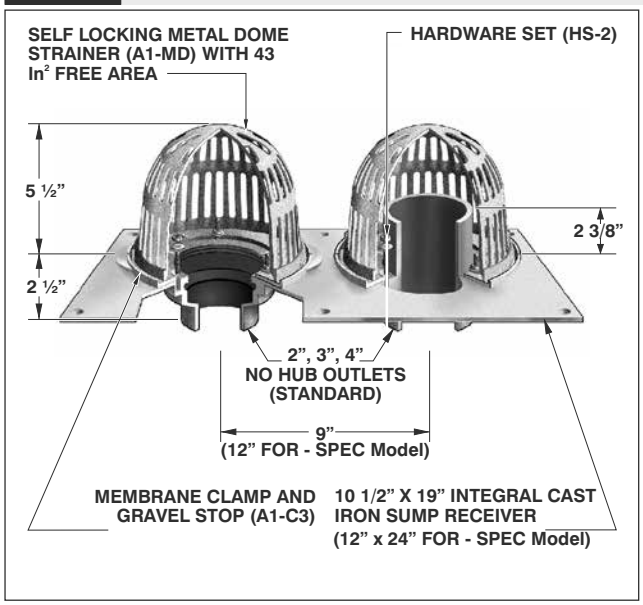

LACQUERED CAST IRON BODY WITH:			
MODEL NO.	WT Lbs.	NO HUB OUTLET SIZE	METAL DOMES (STANDARD)
R1152, 3, 4	22.50	2", 3", 4"	$ 2268.00

R1100-90 OPTIONAL VARIATIONS:

SUFFIX	DESCRIPTION	LIST PRICE
-6	Vandal proof (Metal dome only)(H-1029)	$ 153.00
-11	Acid resistant epoxy coated body, membrane clamp & dome	$ 995.00
-12	Galvanized metal dome (add to -M Price)	$ 189.00
-12A	Galvanized body and membrane clamp	$ 261.00
-13	Galvanized body, membrane clamp and dome (add to -M price)	$ 448.00
-81	Rough bronze dome(A1-MD-81)	$ 459.00
-83	Stainless steel mesh screen over metal dome (A1-SSD)	$ 459.00
-B	Sump Receiver (A1-BP-90 for R1100-90 Series)	$ 337.00
-E	Adjustable extension	$ 449.00
-EG	Galvanized adjustable extension	$ 854.00
-F1,-F2,-F3	Accuflow (parabolic weir)	$ 565.00
-G	Ballast guard (A1-BG)	$ 604.00
-JC	Ballast guard with secondary clamp (not with R 1100-PJ)	$ 800.00
-M	Metal dome (to poly dome)	$ 123.00
-R	2" External water dam (A1-WD)	$ 255.00
-U	Underdeck clamp (A1-C3) (A1-C3-CO W/90 body)	$ 196.00
-W	Adjustable water dam (W-31)	$ 255.00
-W-1	Waterproofing flange (A1-W-1)	$ 384.00
-Z	Extended wide flange on body (13"Dia. x 1/8 thick)	$ 1724.00

Note: For the -SPEC model, dimensions are 24" long x 12" wide with 12" between center of outlets.

*** R1270 Recommended when a 6" outlet is required.**

R1150 OPTIONAL VARIATIONS:

SUFFIX	DESCRIPTION	LIST PRICE	SUFFIX	DESCRIPTION	LIST PRICE
-6	Vandal proof (Metal domes only)	$ 306.00	-83	Stainless steel mesh screen over domes (A1-SSD)	$ 918.00
-11	Acid resistant epoxy (Excluding polydomes)	$ 1990.00	-90	Threaded side outlets (2", 3" or 4") (N/A -30, -31) No Add for -NH	$ 574.00
-12	Galvanized metal domes	$ 378.00	-G	Ballast guards (A1-BG)	$ 1208.00
-13	All galvanized	$ 520.00	-SPEC	Loose set galvanized sheet metal sump receiver (R1150-BP)	No Add
			-U	Underdeck clamps (A1-C3) (Only with -SPEC)	$ 392.00

Design and dimensions are subject to modification. Prices do not include applicable taxes. Visit **www.mifab.com** for the most recent product information.
MIFAB®, Inc., 1321 West 119th Street, Chicago, Illinois 60643-5109, USA Toll Free: 1-800-465-2736 • Fax: 1-773-341-3049
All sales subject to MIFAB's® Terms & Warranties. Please refer to inside front cover. sales@mifab.com • Canada Toll Free: 1-800-387-3880

R1200 LARGE SUMP ROOF DRAIN R1200

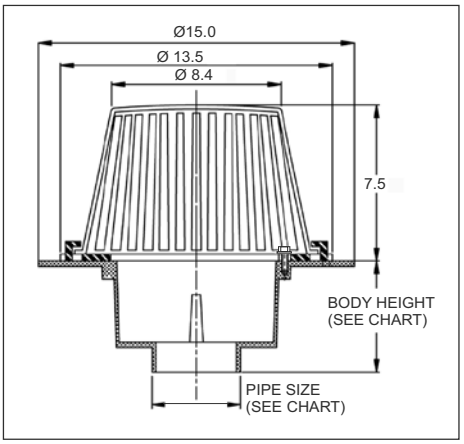

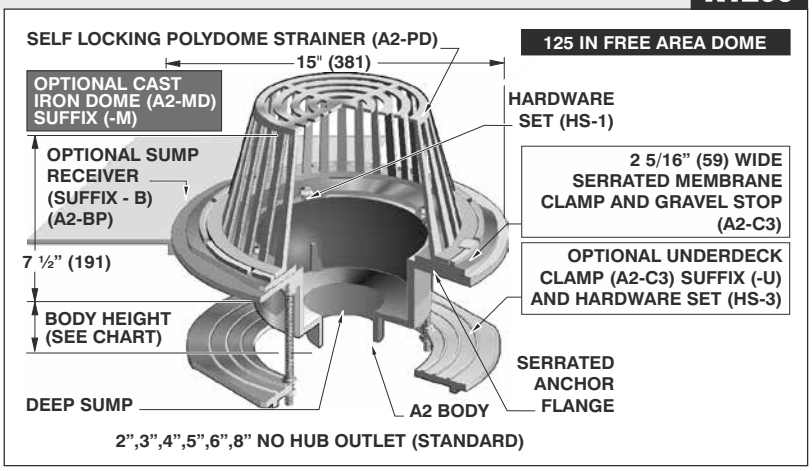

LACQUERED CAST IRON BODY WITH:

MODEL NO.	WT Lbs.	OUTLET SIZE	POLY DOME (STANDARD)	CAST IRON DOME (-M)
R1202, 3, 4	26.50	2", 3", 4",	$ 918.00	$ 1189.00
R1205, 6	27.75	5", 6"	$ 1315.00	$ 1586.00
R1208	31.00	8"	$ 1709.00	$ 1980.00

DOME RECEIVER, UNDERDECK CLAMP & EXTENSION RING GUIDE

BODY & OUTLET SIZE	DOME RECEIVER*	UNDERDECK CLAMP	EXTENSION RING & HARDWARE	SUMP RECEIVER
A2-2"-6"	A2-C3*	A2-C3	A2-C3 & HS-3	A2-BP
A2-90-2"-4"	A2-C3*	A2-C3-CO	A2-C3 & HS-3	A2-BP-90
A2-8NH	A2-C3*	A368-DC	A368-DC & HS-3	A2-BP
A7-8X	A2-C3*	A7-UDC-10	A7-UDC-10 & HS-3	A7-BP

PARTS

*** Requires HS-2 hardware except A7-C3 that uses HS-7 hardware set.**

*** Specify POG-6 for C.I. pipe and POG-6-PVC for PVC pipe. 2", 3", 4" sizes use same gasket.**

A2 BODY

A2-PD

A2-C3

HS-1

BODY HEIGHT A2 BODY BASED ROOF DRAINS

PIPE SIZE	NO HUB (STANDARD)	PUSH ON (P)	THREADED "T"	INSIDE CAULK (X)	PVC/ABS (-30/-31)
2"	5 3/4"	5 1/2"	6 1/2"	6 1/2"	6 3/4"
3"	5 3/4"	5 1/2"	6 5/8"	6 1/2"	7 1/2"
4"	5 3/4"	5 1/2"	5 1/2"	6 1/2"	7 5/8"
5"	5 3/4"	-	6 5/8"	6 3/4"	-
6"	7 1/4"	5 5/8"	5 5/8"	6 1/2"	-
8"	5 7/8"	-	-	See note*	-

A2 BODY

A2-90 BODY HEIGHT

PIPE SIZE	"B" BODY HEIGHT	"A" DIMENSION THREADED OUTLET	"A" DIMENSION NO HUB OUTLET
2"	5 3/4"	4"	3 7/8"
3"	5 3/4"	3 1/2"	3 3/8"
4"	5 3/4"	3 3/8"	2 7/8"

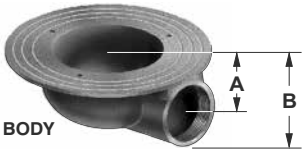

A2-90 BODY

R1200 OPTIONAL VARIATIONS:

SUFFIX	DESCRIPTION	LIST PRICE	SUFFIX	DESCRIPTION	LIST PRICE
-6	Vandal proof (Metal dome only)(H-1029)	$ 164.00	-HC	Adj. ballast guard with secondary clamp	$ 1341.00
-11	Acid resistant epoxy coated body, membrane clamp & dome	$ 1764.00	-JC	Ballast guard with secondary clamp	$ 1341.00
-12	Galvanized metal dome (add to -M Price)	$ 477.00	M-80	Low aluminum dome (4 1/4" high) (A2-MDL-80) (to poly dome)	$ 322.00
-12A	Galvanized body and membrane clamp	$ 1246.00	P	Push on outlet, (2",3",4",6") Specify POG-6 for C.I. pipe and POG-6-PVC for PVC pipe, 2", 3", 4" use same gasket.	No Add
-12B	Galvanized metal dome and membrane clamp	$ 864.00			
-13	Galvanized body, membrane clamp and dome	$ 1770.00	-R	2" external water dam (A2-WD)	$ 306.00
-28	Stainless steel body (Type 304) (2", 3", 4" NH only)	$ 4702.00	T	Threaded outlet, (2", 3", 4", 5" or 6")	$ 107.00
-30	PVC socket connection body* (2", 3", 4")	No Add	-U	Underdeck clamp (A2-C3) (A368-DC for 8")	$ 319.00
-31	ABS socket connection body* (2", 3", 4")	No Add	-U3	Underdeck clamp with cut away side (A2-C3-C0)	$ 637.00
-81	Rough bronze dome (A2-MDL-81)	$ 1067.00	-V	Fixed extension, (2",3",4") (A2-V2, A2-V3, A2-V4)	$ 860.00
-83	Stainless steel mesh screen over metal dome (A2-SSD)	$ 655.00	-VG	Galvanized fixed extension, (2",3",4")	$ 1295.00
-90	Threaded side outlet (cast iron only) (2",3",4") (N/A in -30,-31)	$ 481.00	-W	Adjustable internal water dam (5" high x 4"diameter) (A2-C3-W and W-31)	$ 1150.00
-90-NH	No hub side outlet (cast iron only) (2",3",4")(N/A in -30,-31)	$ 481.00	-W-1	Water proofing flange (A2-W-1)	$ 578.00
-B	Sump receiver (A2-BP)	$ 356.00	-W2	2" internal water dam (2" high x 4" diameter) (A2-C3-W and W-31)	$ 547.00
-E	Adjustable extension (See page 110, point #7)	$ 943.00	-W3	3" internal water dam (3" high x 4" diameter) (A2-C3-W and W-31)	$ 547.00
-EG	Galvanized adjustable extension	$ 1397.00	-W4	4" internal water dam (4" high x 4" diameter) (A2-C3-W and W-31)	$ 547.00
-F	Accuflow (parabolic weir) (adj. to 1, 2 or 3 slots)	$ 1738.00	-W6	6" internal water dam (4" high x 6" diameter (A2-C3-W6 and W6-31)	$ 743.00
-G	Ballast guard (A2-BG)	$ 1022.00	X	Inside caulk outlet, (2", 3", 4", 5" or 6")	No Add
			-Z	Extended wide flange on body (20"Dia. x 1/4 thick)	$ 1724.00

Note: Deck opening - 10" (254) with sump receiver - 15 3/4" (400)

* PVC/ABS Socket bodies available for 2", 3", 4" connection sizes with transition body only.

R1200-BUV LARGE SUMP ROOF DRAIN WITH 2” THROUGH 4” FIXED EXTENSION, SUMP RECEIVER AND DECK CLAMP R1200-BUV

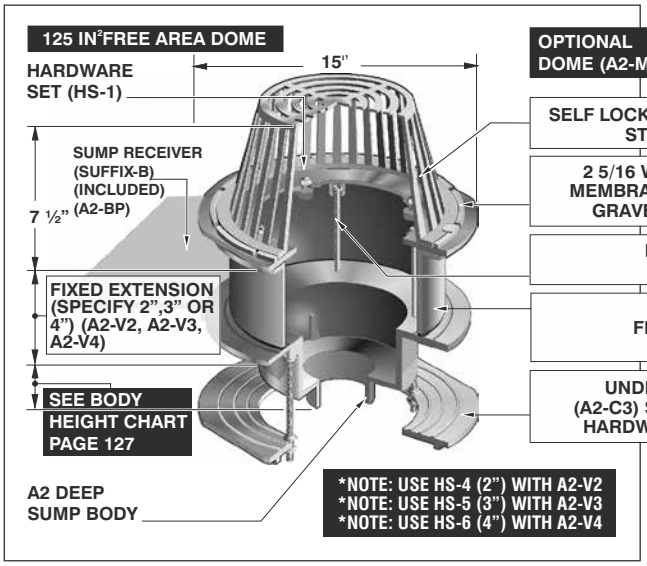

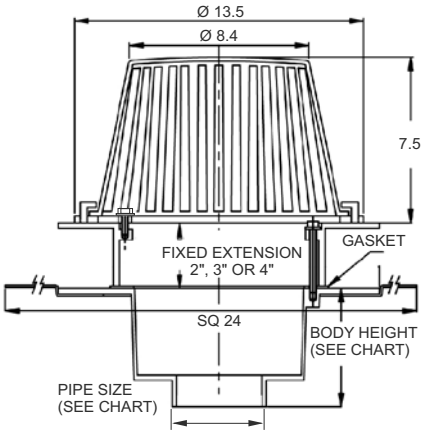

PARTS

(*) Denotes fixed extension height (2”, 3” or4”)
(**) Denotes hardware size 4 for V2, 5 for V3 or 6 for V4

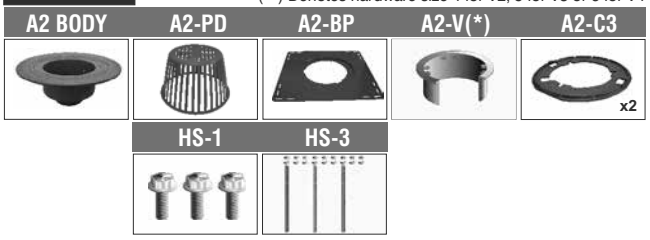

LACQUERED CAST IRON BODY WITH:

MODEL NO.	WT Lbs.	OUTLET SIZE	POLY DOME (STANDARD)	CAST IRON DOME (-M)
R1202, 3, 4-BUV	41.50	2”, 3”, 4”,	$ 2453.00	$ 2724.00
R1205, 6-BUV	44.25	5”, 6”	$ 2850.00	$ 3121.00
R1208-BUV	46.50	8”	$ 3244.00	$ 3515.00

R1200-BUV AND R1200-EU OPTIONAL VARIATIONS - SEE PAGE 127

R1200-EU LARGE SUMP ROOF DRAIN WITH EXTENSION FOR 1 3/4” TO 7” INSULATION R1200-EU

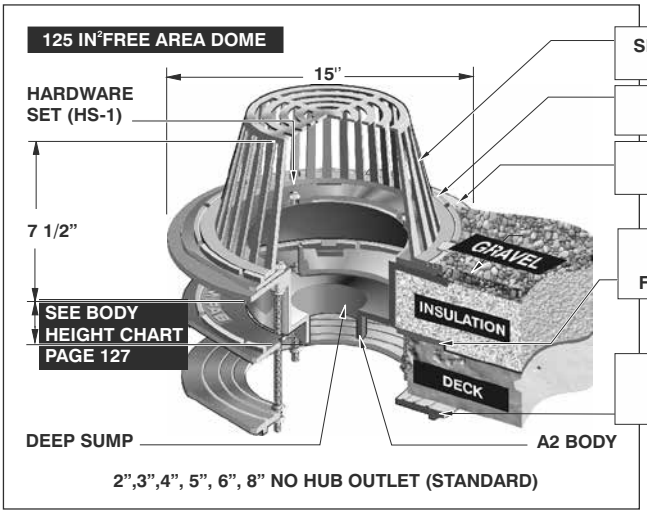

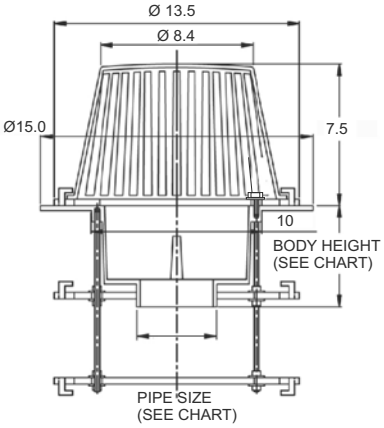

LACQUERED CAST IRON BODY WITH:

MODEL NO.	WT Lbs.	OUTLET SIZE	POLY DOME (STANDARD)	CAST IRON DOME (-M)
R1202, 3, 4-EU	32.00	2”, 3”, 4”,	$ 2180.00	$ 2451.00
R1205, 6-EU	34.25	5”, 6”	$ 2577.00	$ 2848.00
R1208-EU	36.0	8”	$ 2971.00	$ 3242.00

PARTS

Design and dimensions are subject to modification. Prices do not include applicable taxes. Visit **www.mifab.com** for the most recent product information.
MIFAB®, Inc., 1321 West 119th Street, Chicago, Illinois 60643-5109, USA Toll Free: 1-800-465-2736 • Fax: 1-773-341-3049
All sales subject to MIFAB's® Terms & Warranties. Please refer to inside front cover. sales@mifab.com • Canada Toll Free: 1-800-387-3880

R1200-ES LARGE SUMP ROOF DRAIN WITH EXTENSION FOR 2" – 5 1/2" INSULATION WHEN BODY IS POURED INTO THE DECK R1200-ES

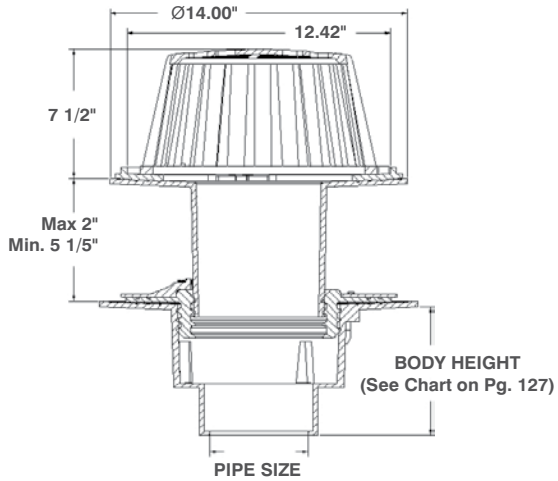

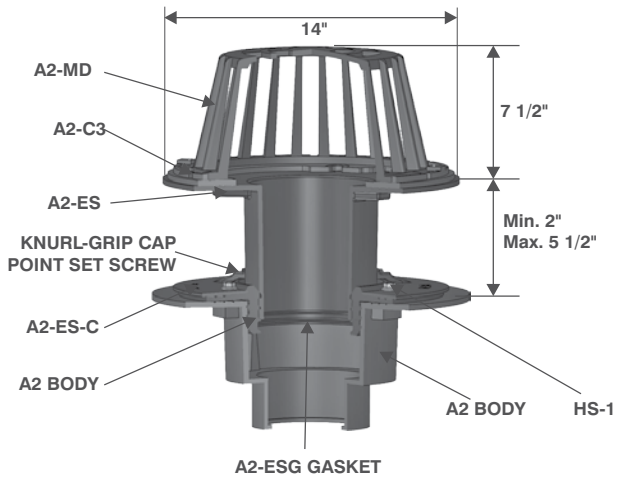

The -ES adjustable extension can be moved up and down in the A2 body (2" to 5 1/2") to meet the required insulation thickness on top of the roof deck. The A2-ESG gasket provides a water seal between the A2-ES extension piece and the A2 body.

LACQUERED CAST IRON BODY WITH:

MODEL NO.	WT Lbs.	OUTLET SIZE	POLY DOME (STANDARD)	CAST IRON DOME (-M)
R1200-ES,2, 3, 4	26.50	2", 3", 4",	$ 2180.00	$ 2451.00
R1200-ES,5, 6	27.75	5", 6"	$ 2577.00	$ 2848.00
R1200-ES,8	31.00	8"	$ 2971.00	$ 3242.00

PARTS

*** Requires HS-2 hardware except A7-C3 that uses HS-7 hardware set.**

*** Specify POG-6 for C.I. pipe and POG-6-PVC for PVC pipe. 2", 3", 4" sizes use same gasket.**

A2 BODY

A2-PD

A2-C3

HS-1

A2-ES-C

A2-ES

A2-ESG

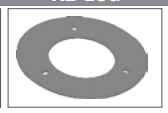

HS-3

R1200-ES OPTIONAL VARIATIONS:

SUFFIX	DESCRIPTION	LIST PRICE	SUFFIX	DESCRIPTION	LIST PRICE
-6	Vandal proof (Metal dome only)(H-1029)	$ 164.00	M-80	Low aluminum dome (4 1/4" high) (A2-MDL-80) (to poly dome)	$ 322.00
-11	Acid resistant epoxy coated body, membrane clamp & dome	$ 1764.00	P	Push on outlet, (2",3",4",6") Specify POG-6 for C.I. pipe and POG-6-PVC for PVC pipe, 2", 3", 4" use same gasket.	No Add
-12	Galvanized metal dome (add to -M Price)	$ 477.00			
-12A	Galvanized body and membrane clamp	$ 1246.00	-R	2" external water dam (A2-WD)	$ 306.00
-12B	Galvanized metal dome and membrane clamp	$ 864.00	T	Threaded outlet, (2", 3", 4", 5" or 6")	$ 107.00
-13	Galvanized body, membrane clamp and dome	$ 1770.00	-U	Underdeck clamp (A2-C3) (A368-DC for 8")	$ 319.00
-28	Stainless steel body (Type 304) (2", 3", 4" NH only)	$ 4702.00	-U3	Underdeck clamp with cut away side (A2-C3-C0)	$ 637.00
-30	PVC socket connection body* (2", 3", 4")	No Add	-W	Adjustable internal water dam (5" high x 4"diameter) (A2-C3-W & W-31)	$ 1150.00
-31	ABS socket connection body* (2", 3", 4")	No Add	-W-1	Water proofing flange (A2-W-1)	$ 578.00
-81	Rough bronze dome (A2-MDL-81)	$ 1067.00	-W2	2" internal water dam (2" high x 4" diameter) (A2-C3-W and W-31)	$ 547.00
-83	Stainless steel mesh screen over metal dome (A2-SSD)	$ 655.00	-W3	3" internal water dam (3" high x 4" diameter) (A2-C3-W and W-31)	$ 547.00
-90	Threaded side outlet (cast iron only) (2",3",4") (N/A in -30,-31)	$ 481.00	-W4	4" internal water dam (4" high x 4" diameter) (A2-C3-W and W-31)	$ 547.00
-90-NH	No hub side outlet (cast iron only) (2",3",4")(N/A in -30,-31)	$ 481.00	-W6	6" internal water dam (4" high x 6" diameter (A2-C3-W6 and W6-31)	$ 743.00
-B	Sump receiver (A2-BP)	$ 356.00	X	Inside caulk outlet, (2", 3", 4", 5" or 6")	No Add
-EG	Galvanized adjustable extension	$ 1397.00	-Z	Extended wide flange on body (20"Dia. x 1/4 thick)	$ 1724.00
-F	Accuflow (parabolic weir) (adj. to 1, 2 or 3 slots)	$ 1738.00			
-G	Ballast guard (A2-BG)	$ 1022.00			

Note: Deck opening - 10" (254) with sump receiver - 15 3/4" (400)

* PVC/ABS Socket bodies available for 2", 3", 4" connection sizes with transition body only.

R1200-F LARGE SUMP ROOF DRAIN WITH PARABOLIC FLOW CONTROL WEIR R1200-F

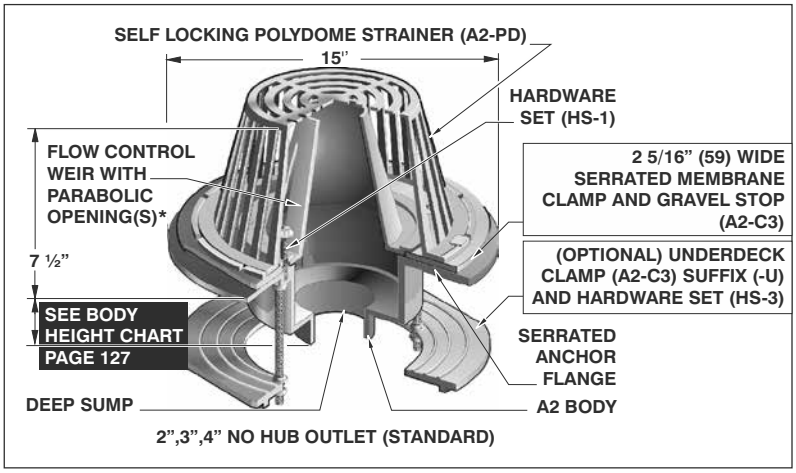

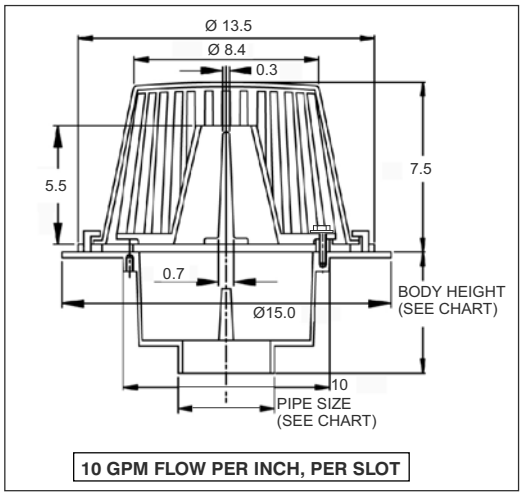

LACQUERED CAST IRON BODY WITH:				
MODEL NO.	WT Lbs.	OUTLET SIZE	POLY DOME (STANDARD)	CAST IRON DOME (-M)
R1202, 3, 4-F	26.00	2", 3", 4"	$ 2655.00	$ 2926.00

PARTS

A2 BODY	A2-PD	A2-C3	HS-1	A2-F

(*) Denotes number of slots in weir (1, 2 or 3)

R1200-F, R1200-G, R1200-HC, R1200-JC OPTIONAL VARIATIONS: CONTINUE Page 131

SUFFIX	DESCRIPTION	LIST PRICE	SUFFIX	DESCRIPTION	LIST PRICE
-6	Vandal proof (Metal dome only) (H-1029)	$ 164.00	-30	PVC socket connection body*(2", 3", 4")	No Add
-11	Acid resistant epoxy coated body, membrane clamp & dome	$ 1764.00	-31	ABS socket connection body*(2", 3", 4")	No Add
-12	Galvanized metal dome (add to -M Price)	$ 477.00	-81	Rough bronze dome (A2-MDL-81)	$ 1067.00
-12A	Galvanized body and membrane clamp	$ 1246.00	-83	Stainless steel mesh screen over metal dome (A2-SSD)	$ 655.00
-12B	Galvanized metal dome and membrane clamp	$ 864.00	-90	Threaded side outlet (cast iron only) (2,"3,"4") (N/A in 30,-31)	$ 481.00
-13	Galvanized body, membrane clamp and dome	$ 1770.00	-90-NH	No hub side outlet (cast iron only) (2,"3,"4) (N/A in 30,-31)	$ 481.00
-28	Stainless steel body (Type 304) (2", 3", 4" NH only)	$ 4702.00	-B	Sump receiver (A2-BP)	$ 356.00

R1200-G LARGE SUMP ROOF DRAIN WITH BALLAST GUARD FOR I.R.M.A. ROOFS R1200-G

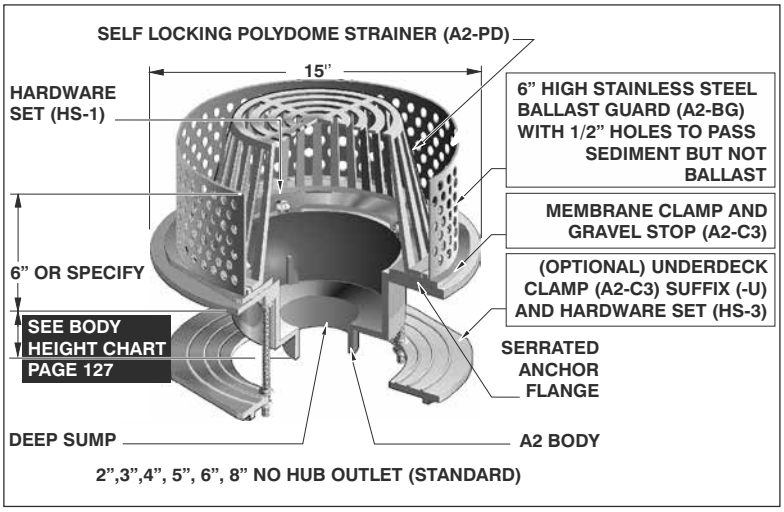

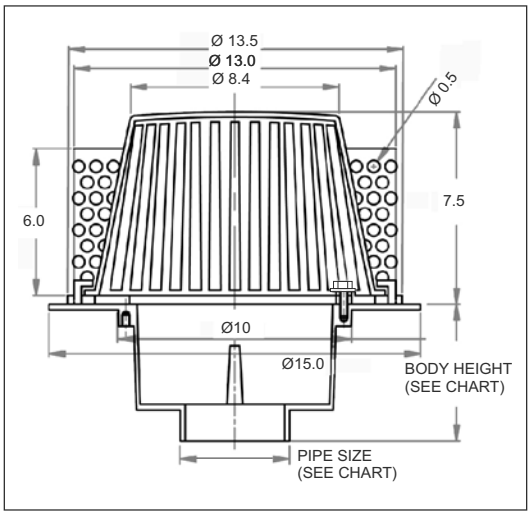

LACQUERED CAST IRON BODY WITH:				
MODEL NO.	WT Lbs.	OUTLET SIZE	POLY DOME (STANDARD)	CAST IRON DOME (-M)
R1202, 3, 4-G	21.00	2", 3", 4"	$ 1939.00	$ 2210.00
R1205, 6-G	23.00	5", 6"	$ 2336.00	$ 2607.00
R1208-G	25.00	8"	$ 2730.00	$ 3001.00

PARTS

A2 BODY	A2-PD	A2-BG	A2-C3	HS-1

Design and dimensions are subject to modification. Prices do not include applicable taxes. Visit **www.mifab.com** for the most recent product information.
MIFAB®, Inc., 1321 West 119th Street, Chicago, Illinois 60643-5109, USA Toll Free: 1-800-465-2736 • Fax: 1-773-341-3049
All sales subject to MIFAB's® Terms & Warranties. Please refer to inside front cover. sales@mifab.com • Canada Toll Free: 1-800-387-3880

R1200-HC LARGE SUMP ROOF DRAIN WITH ADJUSTABLE BALLAST GUARD FOR IRMA ROOFS R1200-HC

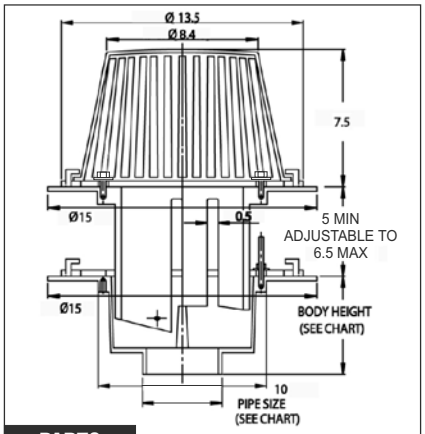

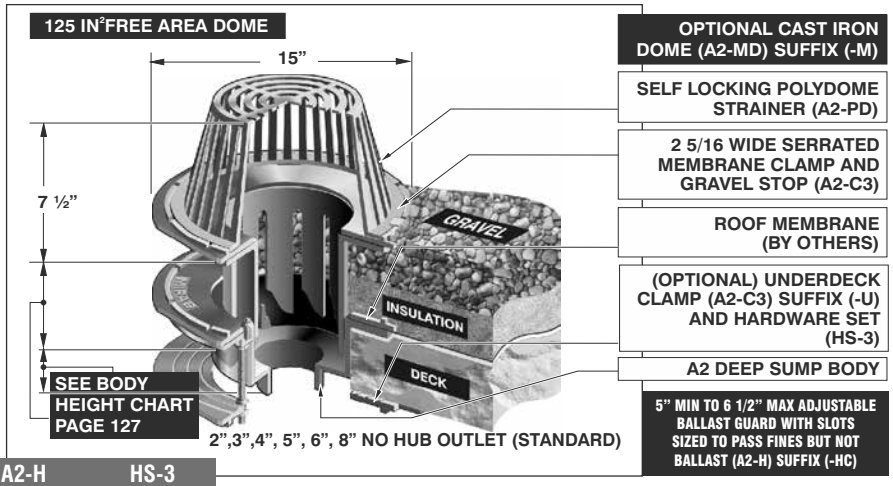

PARTS

A2 BODY	A2-PD	A2-C3	A2-H	HS-3
		x2		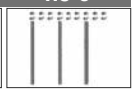

HS-1

LACQUERED CAST IRON BODY WITH:				
MODEL NO.	WT Lbs.	OUTLET SIZE	POLY DOME (STANDARD)	CAST IRON DOME (-M)
R1202, 3, 4-HC	44.50	2", 3", 4"	$ 2259.00	$ 2530.00
R1205, 6-HC	46.50	5", 6"	$ 2656.00	$ 2927.00
R1208-HC	9.00	8"	$ 3050.00	$ 3321.00

R1200-F, R1200-G, R1200-HC, R1200-JC OPTIONAL VARIATIONS:

SUFFIX	DESCRIPTION	LIST PRICE	SUFFIX	DESCRIPTION	LIST PRICE
-E	Adjustable extension **(see page 110, point #7)**	$ 943.00	-U	Underdeck clamp (A2-C3) (Incl. with BUV) (A368-DC for 8")	$ 319.00
-EG	Galvanized adjustable extension	$ 1397.00	-U3	Underdeck clamp with cut away side (A2-C3-CO)	$ 637.00
-F	Accuflow (parabolic weir) (adj. to 1, 2 or 3 slots)	$ 1738.00	-V	Fixed extension, (2",3",4") (A2-V2, A2-V3-A2-V4)	$ 860.00
-G	Ballast guard (A2-BG)	$ 1022.00	-VG	Galvanized fixed extension, (2",3",4")	$ 1295.00
-HC	Adj. ballast guard with secondary clamp	$ 1341.00	-W	Adjustable internal water dam (5" high x 4" diameter) (A2-C3-W & W-31)	$ 1150.00
-JC	Ballast guard with secondary clamp	$ 1341.00	-W-1	Water proofing flange (A2-W-1)	$ 578.00
M-80	Low aluminum dome (4 1/4" high) (A2-MDL-80) (to poly dome)	$ 322.00	-W2	2" internal water dam (A2-C3-W and W-31)	$ 547.00
P	Push on outlet, (2",3",4",6")*	No Add	-W3	3" internal water dam (A2-C3-W and W-31)	$ 547.00
-R	2" external water dam (A2-WD)	$ 306.00	-W4	4" internal water dam (A2-C3-W and W-31)	$ 547.00
T	Threaded outlet, (2", 3", 4", 5" or 6")	$ 107.00	X	Inside caulk outlet (2", 3", 4", 5" or 6")	No Add
			-Z	Extended wide flange on body (20" Dia. x 1/4" thick)	$ 1724.00

* Specify POG-6 for C.I. pipe and POG-6-PVC for PVC pipe 2", 3", 4" sizes use same gasket.

R1200-JC LARGE SUMP ROOF DRAIN WITH S.S. BALLAST GUARD FOR I.R.MA. ROOFS R1200-JC

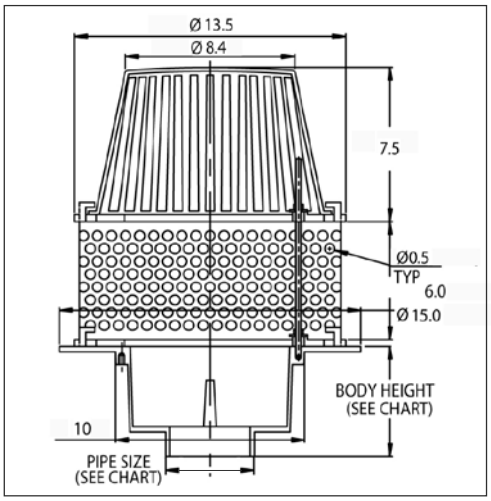

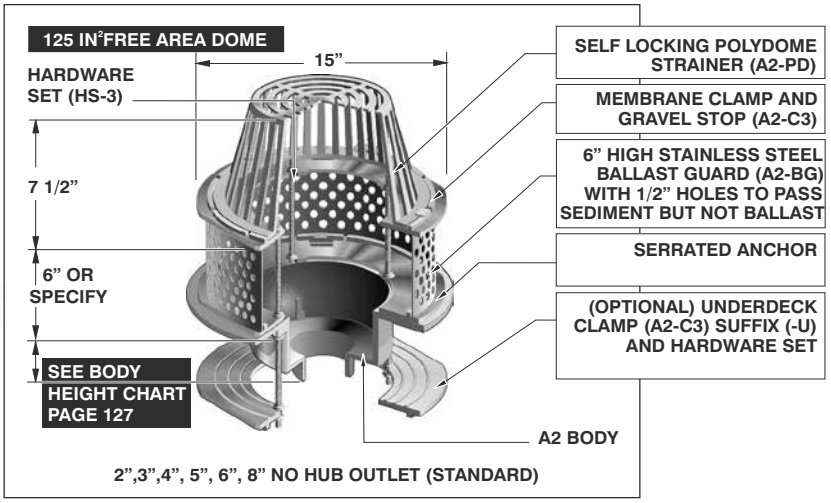

LACQUERED CAST IRON BODY WITH:				
MODEL NO.	WT Lbs.	OUTLET SIZE	POLY DOME (STANDARD)	CAST IRON DOME (-M)
R1202, 3, 4-JC	28.00	2", 3", 4",	$ 2259.00	$ 2530.00
R1205, 6-JC	30.00	5", 6"	$ 2656.00	$ 2927.00
R1208-JC	32.00	8"	$ 3050.00	$ 3321.00

PARTS

A2 BODY	A2-PD	A2-C3	A2-BG	HS-3
		x2		

R1200-JD — LARGE SUMP ROOF DRAIN WITH LOW PROFILE DOME AND JASAWAZ STYLE BODY — R1200-JD

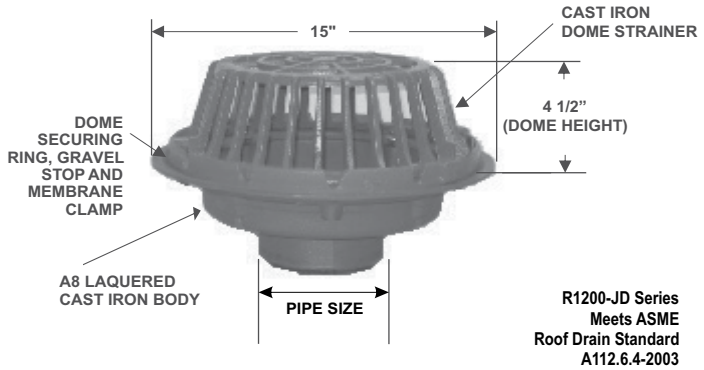

PARTS

A8 BODY	A8-MD	A8-C3	H-1134

LACQUERED CAST IRON BODY WITH:			
MODEL NO.	WT Lbs.	OUTLET SIZE (NO HUB)	CAST IRON DOME
R1202,3,4-JD	26.50	2", 3", 4",	$ 1189.00
R1205,6-JD	27.75	5", 6"	$ 1586.00

R1200-JD-STR — LARGE SUMP ROOF DRAIN WITH LOW PROFILE DOME, JASAWAZ STYLE BODY AND EXTENSION PAN — R1200-JD-STR

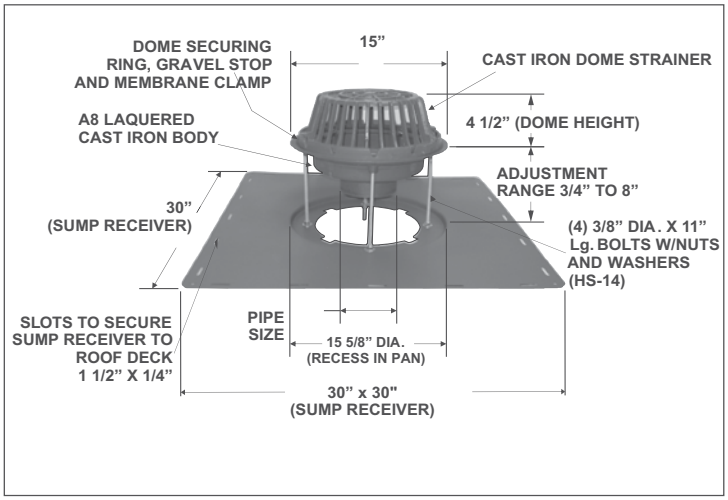

PARTS

A8 BODY	A8-MD	A8-C3	H-1134

A2-BP-STR	HS-14

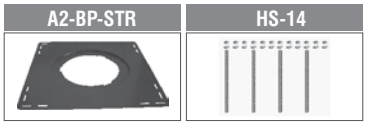

R1200-JD-STR Series Meets ASME Roof Drain Standard A112.6.4-2003

LACQUERED CAST IRON BODY WITH:			
MODEL NO.	WT Lbs.	OUTLET SIZE (NO HUB)	CAST IRON DOME
R1202,3,4-JD-STR	26.50	2", 3", 4",	$ 1699.00
R1205,6-JD-STR	27.75	5", 6"	$ 2500.00

R1200-JD and R1200-JD-STR OPTIONAL VARIATIONS:

SUFFIX	DESCRIPTION	LIST PRICE
-6	Vandal proof (Metal dome only)(H-1029)	$ 164.00
-11	Acid resistant epoxy coated body, membrane clamp & dome	$ 1764.00
-12	Galvanized metal dome	$ 477.00
-12A	Galvanized body and membrane clamp	$ 1246.00
-12B	Galvanized metal dome and membrane clamp	$ 864.00
-13	Galvanized body, membrane clamp and dome	$ 1770.00
-28	Stainless steel body (Type 304) (2", 3", 4" NH only)	$ 4702.00
-83	Stainless steel mesh screen over metal dome	$ 655.00
-B	Sump receiver (A8-BP - for R1200-JD only)	$ 356.00
-G	Ballast guard (A8-BG)	$ 1022.00
-JC	Ballast guard with secondary clamp	$ 1341.00
-R	2" external water dam (A8-WD)	$ 306.00
-U	Underdeck clamp (A8-UDC)	$ 319.00
X	Inside caulk outlet, (3", 4", 5" or 6")	No Add

Note: Deck opening - 10" (254) with sump receiver - 15 3/4" (400) * PVC/ABS Socket bodies available for 2", 3", 4" connection sizes with transition body only.

Design and dimensions are subject to modification. Prices do not include applicable taxes. Visit **www.mifab.com** for the most recent product information.
MIFAB®, Inc., 1321 West 119th Street, Chicago, Illinois 60643-5109, USA Toll Free: 1-800-465-2736 • Fax: 1-773-341-3049
All sales subject to MIFAB's® Terms & Warranties. Please refer to inside front cover. sales@mifab.com • Canada Toll Free: 1-800-387-3880

R1200-PR LARGE SUMP PROMENADE DECK DRAIN WITH 12 3/4" x 12 3/4" TOP R1200-PR

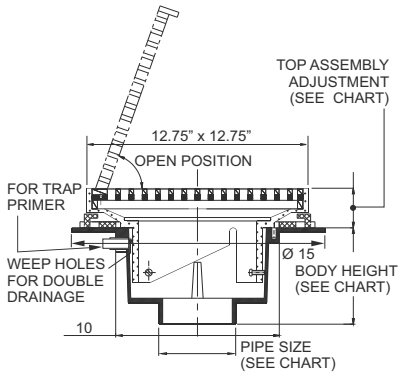

NOTE: FOR EXTENSION USE A2-XY

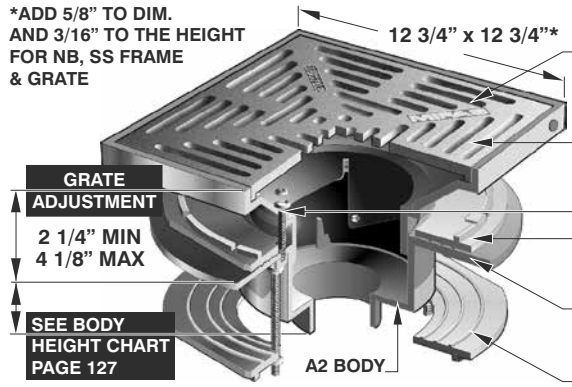

2",3",4", 5", 6", 8" NO HUB OUTLET (STANDARD)

- 51 IN²FREE AREA GRATE
- 1" THICK DUCTILE IRON TRACTOR GRATE
- F1440-TA-4 TOP ASSEMBLY NOTE: HINGED STD. WITH (-4) GRATE, N/A WITH (-1) OR (-3)
- (HS-1) HARDWARE
- MEMBRANE CLAMP (A2-C3)
- SERRATED ANCHOR FLANGE
- (OPTIONAL) UNDERDECK CLAMP (A2-C3) SUFFIX (-U) AND HARDWARE SET (HS-3)

LACQUERED CAST IRON BODY WITH:

MODEL NO.	WT Lbs.	OUTLET SIZE	DUCTILE IRON (-4)	DUCTILE IRON WITH NICKEL BRONZE (VENEER)(-1)	DUCTILE IRON WITH STAINLESS STEEL (VENEER)(-3)
R1202, 3, 4-PR	52.75	2", 3", 4"	$ 1566.00	$ 2870.00	$ 2870.00
R1205, 6-PR	55.00	5", 6"	$ 1963.00	$ 3267.00	$ 3267.00
R1208-PR	57.00	8"	$ 2357.00	$ 3661.00	$ 3661.00

PARTS

(*) Denotes strainer finish (-1, -3 o r- 4)

A2 BODY	F1440-TA-(*)	A2-C3	HS-1

R1200-PR AND R1200-PR15 OPTIONAL VARIATIONS:

SUFFIX	DESCRIPTION	LIST PRICE	SUFFIX	DESCRIPTION	LIST PRICE
-5	Cast iron sediment bucket (A2-MB)	$ 357.00	-B	Sump receiver (A2-BP)	$ 356.00
-6	Vandal proof (H-1029)	$ 164.00	-C	Membrane clamp (A2-C3)	$ 319.00
-11	Acid resistant epoxy coated body, membrane clamp & grate	$ 1764.00	-E	Adjustable extension (see page 110, point #7)	$ 943.00
-12	Galvanized grate	$ 477.00	-EG	Galvanized adjustable extension	$ 1397.00
-13	Galvanized body, membrane clamp and grate	$ 1770.00	P	Push on outlet, (2",3",4",6")*	No Add
-28	Stainless steel body (Type 304) (2", 3", 4" NH only)	$ 4702.00	T	Threaded outlet, (2", 3", 4", 5" or 6")	$ 107.00
-30	PVC socket connection body* (2", 3", 4")	No Add	-U	Underdeck clamp (A2-C3) (A368-DC for 8")	$ 319.00
-31	ABS socket connection body* (2", 3", 4")	No Add	-U3	Underdeck clamp with cut away side (A2-C3-C0)	$ 637.00
-90	Threaded side outlet (cast iron only) (2",3",4") (N/A in -30,-31)	$ 481.00	X	Inside caulk outlet (2", 3", 4", 5" or 6")	No Add
-90-NH	No hub side outlet (cast iron only) (2",3",4")(N/A in -30,-31)	$ 481.00	-Z	Extended wide flange on body (20" Dia .x 1/4 thick)	$ 1724.00

*** Specify POG-6 for C.I. pipe and POG-6-PVC for PVC pipe 2", 3", 4" sizes use same gasket.**

R1200-PR15 LARGE SUMP PROMENADE DECK DRAIN WITH 15 SQUARE TOP R1200-PR15

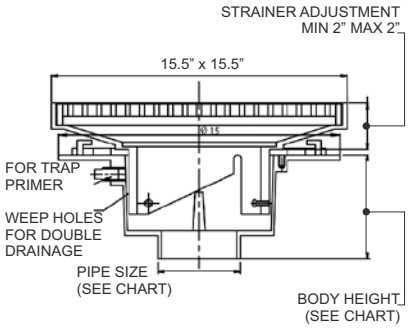

NOTE: FOR EXTENSION USE A2-XY

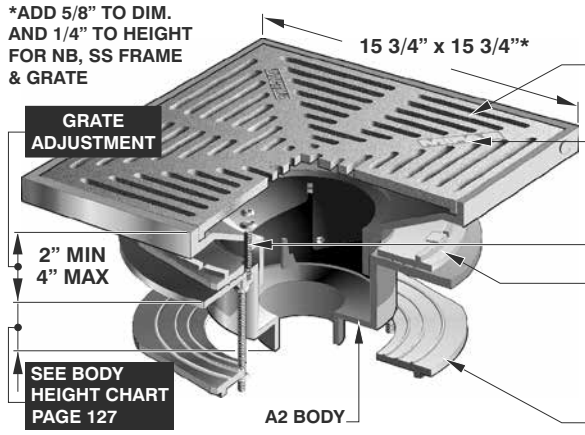

2",3",4", 5", 6", 8" NO HUB OUTLET (STANDARD)

- 80 IN²FREE AREA GRATE
- 1" THICK DUCTILE IRON TRACTOR GRATE
- F1460-TA-4 TOP ASSEMBLY
- (HS-1) HARDWARE
- 2 5/16" WIDE SERRATED MEMBRANE CLAMP AND GRAVEL STOP (A2-C3)
- (OPTIONAL) UNDERDECK CLAMP (A2-C3) SUFFIX (-U) AND HARDWARE SET (HS-3)

LACQUERED CAST IRON BODY WITH:

MODEL NO.	WT Lbs.	OUTLET SIZE	DUCTILE IRON(-4)	DUCTILE IRON WITH NICKEL BRONZE (VENEER)(-1)	DUCTILE IRON WITH STAINLESS STEEL (VENEER)(-3)
R1202, 3, 4-PR15	69.00	2", 3", 4"	$ 2616.00	$ 4323.00	$ 4323.00
R1205, 6-PR15	71.00	5", 6"	$ 3013.00	$ 4720.00	$ 4720.00
R1208-PR15	73.00	8"	$ 3407.00	$ 5114.00	$ 5114.00

PARTS

(*) Denotes strainer finish (-1, -3 or- 4)

A2 BODY	F1460-TA-(*)	A2-C3	HS-1

R1200-RB LARGE SUMP PROMENADE DECK DRAIN WITH EXTENSION AND 12 3/4" x 12 3/4" SECURED TOP ASSEMBLY R1200-RB

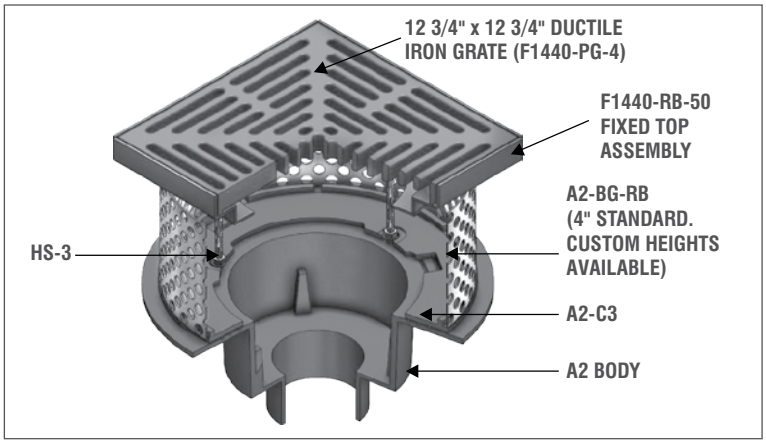

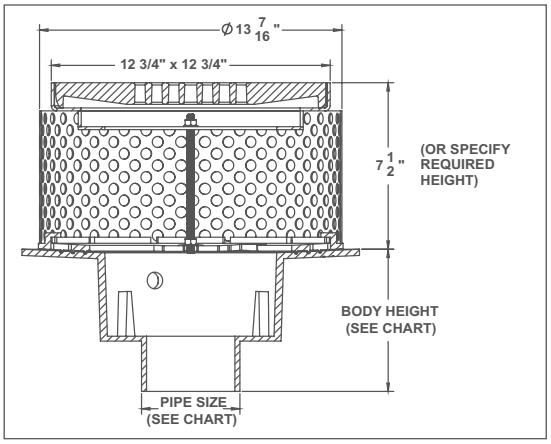

LACQUERED CAST IRON BODY WITH:

MODEL NO.	WT Lbs.	OUTLET SIZE	DUCTILE IRON (-4)	DUCTILE IRON WITH NICKEL BRONZE (VENEER)(-1)	DUCTILE IRON WITH STAINLESS STEEL (VENEER)(-3)
R1202,3,4-RB	52.75	2", 3", 4"	$ 1566.00	$ 2870.00	$ 2870.00
R1205,6-RB	55.00	5", 6"	$ 1963.00	$ 3267.00	$ 3267.00
R1208-RB	57.00	8"	$ 2357.00	$ 3661.00	$ 3661.00

ALSO AVAILABLE WITH 12" ROUND TOP ASSEMBLY. ADD SUFFIX -R. SAME LIST PRICES AS SQUARE MODEL

PARTS (*) Denotes strainer finish (-1, -3 o r- 4)

A2 BODY | F1440-RB-50 | A2-C3 | HS-1

A2-BG-RB | HS-3

R1200-RB AND R1200-RB15 OPTIONAL VARIATIONS:

SUFFIX	DESCRIPTION	LIST PRICE	SUFFIX	DESCRIPTION	LIST PRICE
P	Push on outlet, (2",3",4",6")*	No Add	-U3	Underdeck clamp with cut away side (A2-C3-C0)	$ 637.00
T	Threaded outlet, (2", 3", 4", 5" or 6")	$ 107.00	X	Inside caulk outlet (2", 3", 4", 5" or 6")	No Add
-U	Underdeck clamp (A2-C3) (A368-DC for 8")	$ 319.00	-Z	Extended wide flange on body (20" Dia .x 1/4 thick)	$ 1724.00
			-5	Cast iron sediment bucket	$ 357.00

R1200-RB15 LARGE SUMP PROMENADE DECK DRAIN WITH EXTENSION AND 16" x 16" SECURED TOP ASSEMBLY R1200-RB15

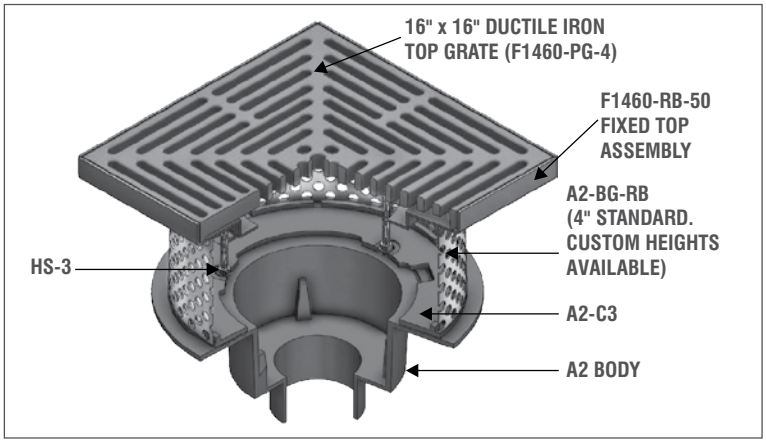

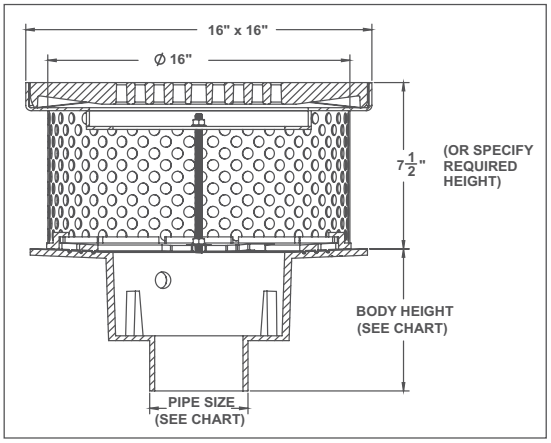

LACQUERED CAST IRON BODY WITH:

MODEL NO.	WT Lbs.	OUTLET SIZE	DUCTILE IRON(-4)	DUCTILE IRON WITH NICKEL BRONZE (VENEER)(-1)	DUCTILE IRON WITH STAINLESS STEEL (VENEER)(-3)
R1202,3,4-RB15	69.00	2", 3", 4"	$ 2616.00	$ 4323.00	$ 4323.00
R1205,6-RB15	71.00	5", 6"	$ 3013.00	$ 4720.00	$ 4720.00
R1208-RB15	73.00	8"	$ 3407.00	$ 5114.00	$ 5114.00

ALSO AVAILABLE WITH 16" ROUND TOP ASSEMBLY. ADD SUFFIX -R. SAME LIST PRICES AS SQUARE MODEL

PARTS (*) Denotes strainer finish (-1, -3 or- 4)

A2 BODY | F1460-RB-50 | A2-C3 | HS-1

A2-BG-RB | HS-3

Design and dimensions are subject to modification. Prices do not include applicable taxes. Visit **www.mifab.com** for the most recent product information.
MIFAB®, Inc., 1321 West 119th Street, Chicago, Illinois 60643-5109, USA Toll Free: 1-800-465-2736 • Fax: 1-773-341-3049
All sales subject to MIFAB's® Terms & Warranties. Please refer to inside front cover. sales@mifab.com • Canada Toll Free: 1-800-387-3880

R1200-R LARGE SUMP ROOF DRAIN WITH EXTERNAL 2" HIGH WATER DAM R1200-R

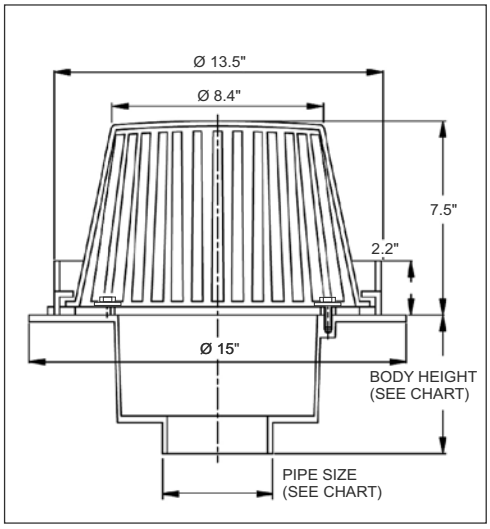

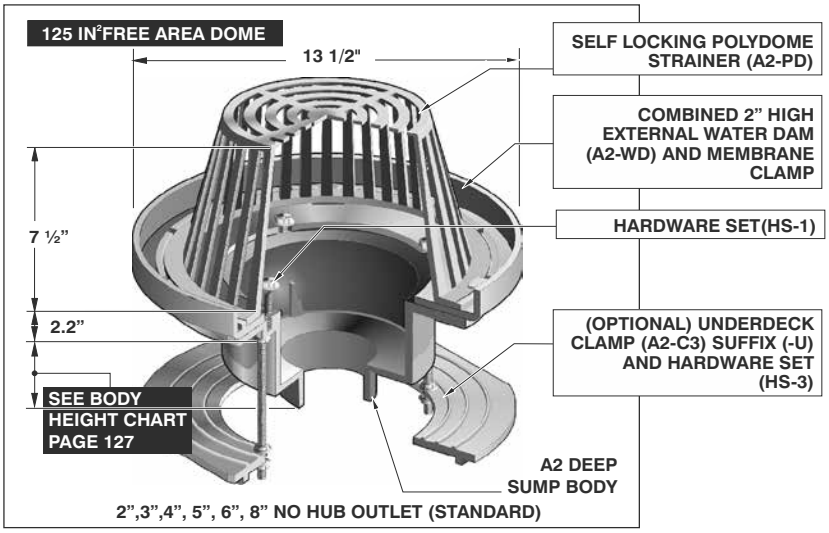

2",3",4", 5", 6", 8" NO HUB OUTLET (STANDARD)

LACQUERED CAST IRON BODY WITH:

MODEL NO.	WT. Lbs.	OUTLET SIZE	POLY DOME (STANDARD)	CAST IRON (-M)
R1202, 3, 4-R	21.50	2", 3", 4",	$ 1223.00	$ 1494.00
R1205, 6-R	24.00	5", 6"	$ 1620.00	$ 1891.00
R1208-R	26.75	8"	$ 2014.00	$ 2285.00

PARTS

R1200-R AND R1200-RS OPTIONAL VARIATIONS:

SUFFIX	DESCRIPTION	LIST PRICE	SUFFIX	DESCRIPTION	LIST PRICE
-6	Vandal proof (Metal dome only)(H-1029)	$ 164.00	-E	Adjustable extension (See page 110, point #7)	$ 943.00
-11	Acid resistant epoxy coated body, membrane clamp & dome	$ 1764.00	-EG	Galvanized adjustable extension	$ 1397.00
-12	Galvanized metal dome (add to -M Price)	$ 477.00	-G	Ballast guard (A2-BG)	$ 1022.00
-12A	Galvanized body and membrane clamp	$ 1246.00	-HC	Adj. ballast guard with secondary clamp	$ 1341.00
-12B	Galvanized metal dome and membrane clamp	$ 864.00	-JC	Ballast guard with secondary clamp	$ 1341.00
-13	Galvanized body, membrane clamp and dome	$ 1770.00	M-80	Low aluminum dome (4 1/4" high) (A2-MDL-80) (to poly dome)	$ 322.00
-28	Stainless steel body (Type 304) (2", 3", 4" NH only)	$ 4702.00	P	Push on outlet, (2",3",4",6") Specify POG-6 for C.I. pipe (A368-DC for 8") & POG-6-PVC for PVC pipe 2", 3", 4" use same gasket.	No Add
-30	PVC socket connection body* (2", 3", 4")	No Add			
-31	ABS socket connection body* (2", 3", 4")	No Add	T	Threaded outlet, (2", 3", 4", 5" or 6")	$ 107.00
-81	Rough bronze dome (A2-MDL-81)	$ 1067.00	-U	Underdeck clamp (A2-C3) (A368-DC for 8")	$ 319.00
-83	Stainless steel mesh screen over metal dome (A2-SSD)	$ 655.00	-U3	Underdeck clamp with cut away side (A2-C3-C0)	$ 637.00
-90	Threaded side outlet (cast iron only) (2",3",4") (N/A in -30,-31)	$ 481.00	-W-1	Water proofing flange (A2-W-1)	$ 578.00
-90-NH	No hub side outlet (cast iron only) (2",3",4")(N/A in -30,-31)	$ 481.00	X	Inside caulk outlet, (2",3",4", 5"or 6")	No Add
-B	Sump receiver (A2-BP)	$ 356.00	-Z	Extended wide flange on body (20"Dia. x 1/4 thick)	$ 1724.00

R1200-RS LARGE SUMP ROOF DECK CONDENSATE RECEPTION DRAIN R1200-RS

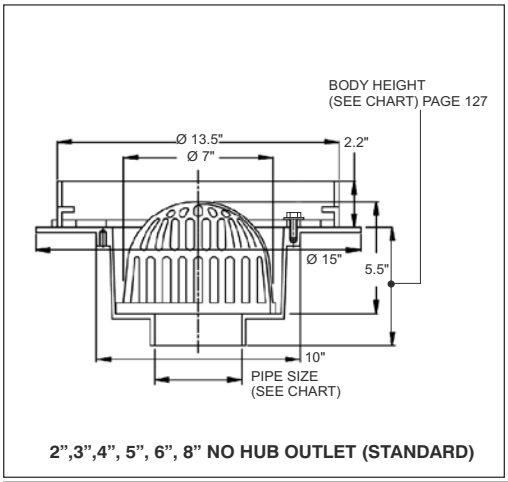

2",3",4", 5", 6", 8" NO HUB OUTLET (STANDARD)

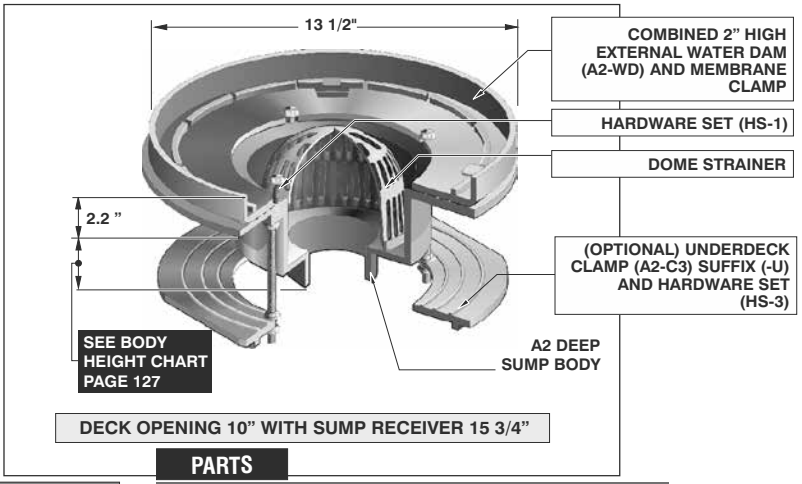

DECK OPENING 10" WITH SUMP RECEIVER 15 3/4"

PARTS

LACQUERED CAST IRON BODY WITH:

MODEL NO.	WT. Lbs.	OUTLET SIZE	POLY DOME (STANDARD)
R1202, 3, 4-RS	22.00	2", 3", 4",	$ 1220.00
R1205, 6-RS	23.00	5", 6"	$ 1617.00

R1200-SO-45 EXTRA DEEP SUMP, DUAL OUTLET ROOF DRAIN R1200-SO-45

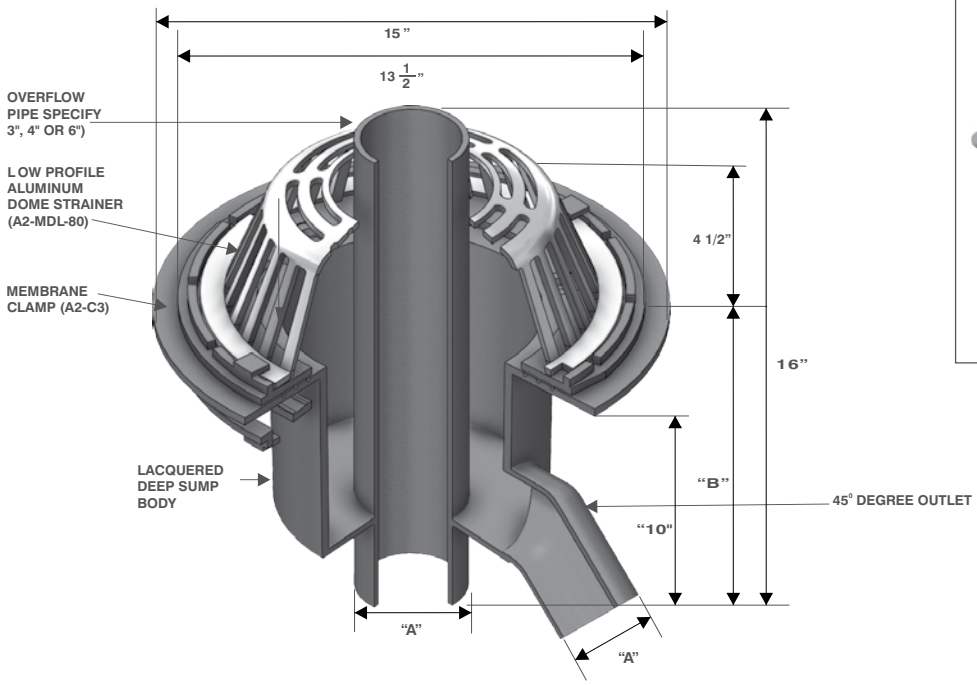

R1200-SO

MODEL NO.	WT. (LBS.)	"A" PIPE SIZE (NO HUB)	"B"
R1203-SO-45	60.00	3"	5 9/16"
R1204-SO-45	60.00	4"	5 9/16"
R1206-SO-45	60.00	6"	5"
R1208-SO-45	75.00	8"	5"

R1200-SO-45

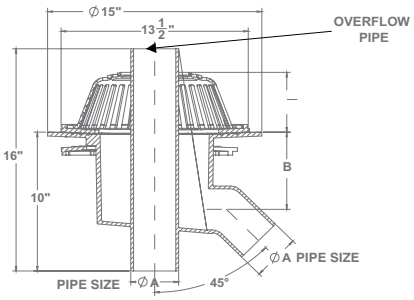

R1208-SO

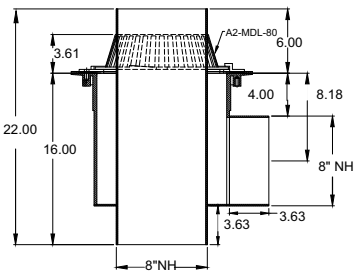

R1200-SO OPTIONAL VARIATIONS:

SUFFIX	DESCRIPTION	LIST PRICE
-6	Vandal proof (H-1029)	$ 164.00
-11	Acid resistant epoxy coated body, membrane clamp & dome	$ 1764.00
-12	Galvanized metal dome	$ 477.00
-12A	Galvanized body and membrane clamp	$ 1246.00
-12B	Galvanized metal dome and membrane clamp	$ 864.00
-13	Galvanized body, membrane clamp and dome	$ 1770.00
-83	Stainless steel mesh screen over metal dome	$ 655.00
-90	90 Degree sewer line connection outlet (No Hub only)	No Add
-B	Sump receiver (A2-BP)	$ 356.00
-DU	Fabricated, powder epoxy coated steel dome on overflow pipe 3", 4"	$ 708.00
-DU-6	Fabricated, powder epoxy coated steel dome on overflow pipe 6"	$ 789.00
-G	Ballast guard (A2-BG)	$ 1670.00
-MS	Stainless steel mesh screen on overflow pipe	$ 490.00
-OP	2" high overflow pipe	No Add
-U	Underdeck clamp (A2-C3-C0)	$ 319.00
-V	Fixed extension (2", 3", 4") (A2-V2, A2-V3, A2-V4)	$ 860.00

Design and dimensions are subject to modification. Prices do not include applicable taxes. Visit **www.mifab.com** for the most recent product information.
MIFAB®, Inc., 1321 West 119th Street, Chicago, Illinois 60643-5109, USA Toll Free: 1-800-465-2736 • Fax: 1-773-341-3049
All sales subject to MIFAB's® Terms & Warranties. Please refer to inside front cover. sales@mifab.com • Canada Toll Free: 1-800-387-3880

R1200-W LARGE SUMP ROOF DRAIN WITH ADJUSTABLE INTERNAL STANDPIPE DAM R1200-W

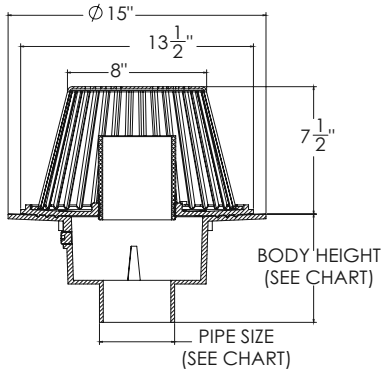

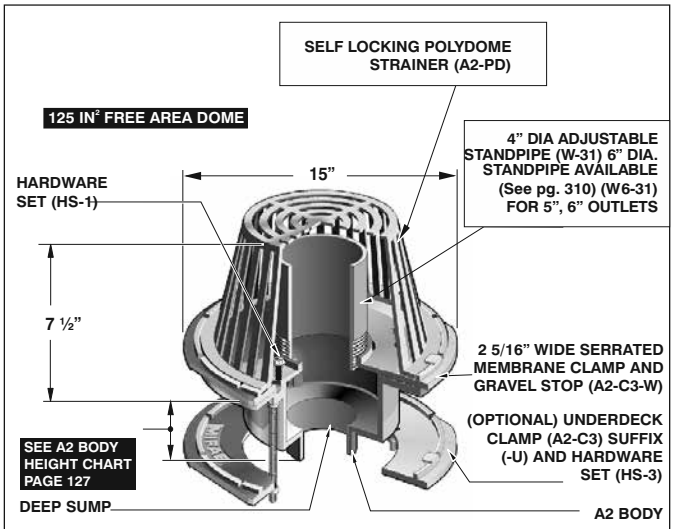

2",3",4",5",6" NO HUB OUTLET (STANDARD)

LACQUERED CAST IRON BODY WITH:

MODEL NO.	WT Lbs.	OUTLET SIZE	POLY DOME (STANDARD)	CAST IRON DOME (-M)
R1202, 3, 4-W	22.00	2", 3", 4"	$ 2067.00	$ 2338.00
R1205, 6-W	23.50	5", 6"	$ 2464.00	$ 2735.00

PARTS

A2 BODY	A2-PD	A2-C3-W	HS-1	W-31

R1200-W and R1200-Z OPTIONAL VARIATIONS

SUFFIX	DESCRIPTION	LIST PRICE	SUFFIX	DESCRIPTION	LIST PRICE
-6	Vandal proof (Metal dome only) (H-1029)	$ 164.00	-G	Ballast guard (A2-BG)	$ 1022.00
-11	Acid resistant epoxy coated body, membrane clamp & dome	$ 1764.00	-HC	Adj. ballast guard with secondary clamp	$ 1341.00
-12	Galvanized metal dome (add to -M Price)	$ 477.00	-JC	Ballast guard with secondary clamp	$ 1341.00
-12A	Galvanized body and membrane clamp	$ 1246.00	M-80	Low aluminum dome (4 1/4" high) (A2-MDL-80) (to poly dome)	$ 322.00
-12B	Galvanized metal dome and membrane clamp	$ 864.00	P	Push on outlet, (2", 3", 4" or 6") Specify POG-6 for C.I. pipe	No Add
-13	Galvanized body, membrane clamp and dome	$ 1770.00	-R	2" external water dam (A2-WD) (R1200-Z only)	$ 306.00
-28	Stainless steel body (Type 304) (2", 3", 4" NH only)	$ 4702.00	T	Threaded outlet, (2", 3", 4", 5" or 6")	$ 107.00
-30	PVC socket connection body* (2", 3", 4")	No Add	-U	Underdeck clamp (A2-C3) (A368-DC for 8")	$ 319.00
-31	ABS socket connection body* (2", 3", 4")	No Add	-U3	Underdeck clamp with cut away side (A2-C3-CO)	$ 637.00
-81	Rough bronze dome (A2-MDL-81)	$ 1067.00	-V	Fixed extension, (2",3",4") (A2-V2, A2-V3 or A2-V4)	$ 860.00
-83	Stainless steel mesh screen over metal dome (A2-SSD)	$ 655.00	-VG	Galvanized fixed extension, (2", 3", or 4")	$ 1295.00
-90	Threaded side outlet (cast iron only), 2",3",4")(N/A in - 30,- 31)	$ 481.00	-W	Adjustable internal water dam (5" high x 4" Diameter) (A2-C3-W & W-31) (R1200-Z only)	$ 1150.00
-90-NH	No hub side outlet (cast iron only), 2",3",4") (N/A in -30,-31)	$ 481.00	-W-1	Water proofing flange (A2-W1)	$ 578.00
-B	Sump receiver (A2-BP) (A2-BP-90 for R1200-90 Series)	$ 356.00	-W2	2" internal water dam (A2-C3- W and W -31)(R1200-Z only)	$ 547.00
-E	Adjustable extension**(see page 110, point #7)**	$ 943.00	-W3	3" internal water dam (A2-C3- W and W -31)(R1200-Z only)	$ 547.00
-EG	Galvanized adjustable extension	$ 1397.00	-W4	4" internal water dam (A2-C3- W and W -31)(R1200-Z only)	$ 547.00
-F	Accuflow (parabolic weir) (adj. to 1, 2 or 3 slots)(-Z only)	$ 1738.00	X	Inside caulk outlet (2",3",4", 5"or 6")	No Add
			-Z	Extended wide flange on body (20" dia. x 1/4"thick)(R1200-W only)	$ 1724.00

R1200-Z LARGE SUMP DEXOTEX ROOF DRAIN WITH WIDE DECK FLANGE FOR LIQUID MEMBRANE ROOF R1200 Z

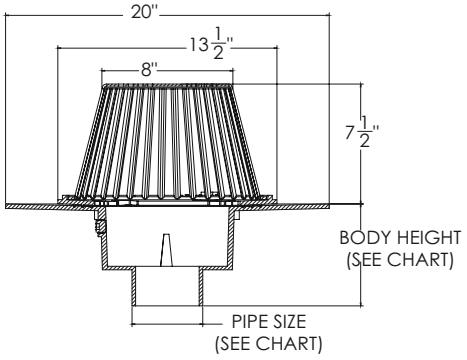

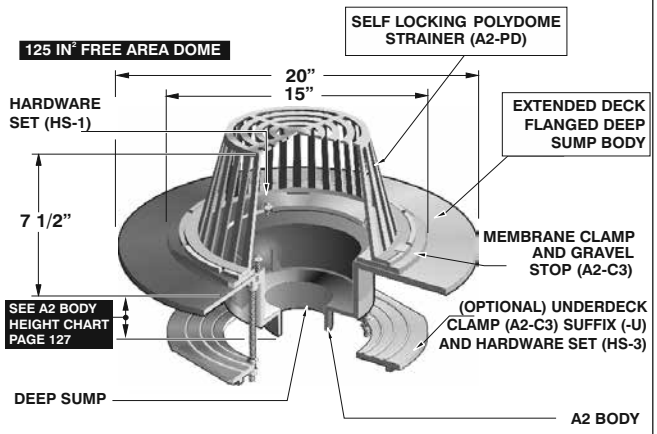

2",3",4", 5", 6", 8"
NO HUB OUTLET (STANDARD)

LACQUERED CAST IRON BODY WITH:

MODEL NO.	WT Lbs.	OUTLET SIZE	POLY DOME (STANDARD)	CAST IRON DOME (-M)
R1202, 3, 4-Z	38.00	2", 3", 4",	$ 2786.00	$ 3057.00
R1205, 6-Z	38.00	5", 6"	$ 3183.00	$ 3454.00
R1208-Z	39.00.	8"	$ 3577.00	$ 3848.00

PARTS (*) Denotes outlet size and type

A6T-PB-Z	A2-PD	A2-C3	HS-1	A3-PG	A1-(*)

ROOF DRAINS

R1200-90 LARGE SUMP ROOF DRAIN WITH SIDE OUTLET R1200-90

125 IN² FREE AREA DOME

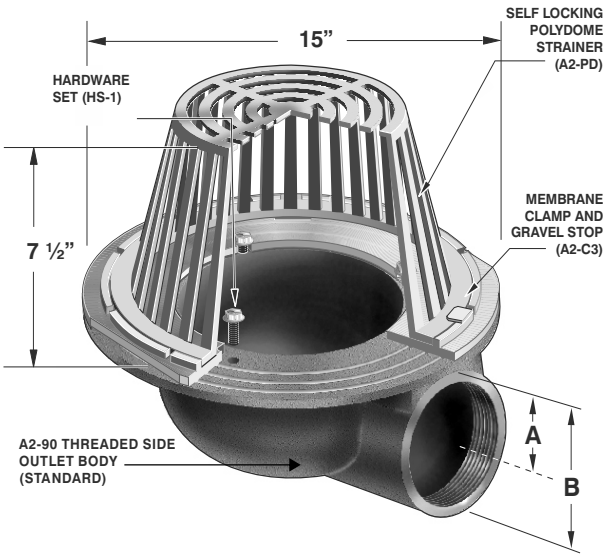

PARTS

A2-(*)T-90

A2-PD

A2-C3

HS-1

A2-2, 3, 4-90-NH

ADD SUFFIX - NH FOR OPTIONAL NO HUB OUTLET NO ADD

* Specify 2”, 3”, or 4” THREADED SIDE OUTLET BODY

LACQUERED CAST IRON BODY WITH:

MODEL NO.	WT Lbs.	OUTLET SIZE	POLY DOME (STANDARD)	CAST IRON (-M) DOME
R1202, 3, 4-90	28.50	2”, 3”, 4”	$ 1399.00	$ 1670.00

BODY HEIGHT

PIPE SIZE	“B” BODY HIGHT	“A” DIMENSION THREADED OUTLET	“A” DIMENSION NO HUB OUTLET
2” (51)	5 3/4” (146)	4 3/8” (111)	3 7/8” (98)
3” (76)	5 3/4” (146)	3 3/4” (95)	3 3/8” (86)
4” (102)	5 3/4” (146)	3 1/4” (83)	2 7/8” (73)

R1200-90 OPTIONAL VARIATIONS

SUFFIX	DESCRIPTION	LIST PRICE
-6	Vandal proof (Metal dome only)(H-1029)	$ 164.00
-11	Acid resistant epoxy coated body, membrane clamp & dome	$ 1764.00
-12	Galvanized metal dome	$ 477.00
-12A	Galvanized body and membrane clamp	$ 1246.00
-12B	Galvanized metal dome and membrane clamp	$ 864.00
-13	Galvanized body, membrane clamp and dome	$ 1770.00
-81	Rough bronze dome (A2-MDL-81) (to poly dome)	$ 1067.00
-83	Stainless steel mesh screen over dome (A2-SSD) (to poly dome)	$ 655.00
-B	Sump receiver (A2-BP-90)	$ 356.00
-E	Adjustable extension (See page 110, point #7)	$ 943.00
-EG	Galvanized adjustable extension	$ 1397.00
-F	Accuflow (parabolic weir) (adj. to 1, 2 or 3 slots)	$ 1738.00
-G	Ballast guard (A2-BG)	$ 1022.00
-HC	Adj. ballast guard with secondary clamp	$ 1342.00
-JC	Ballast guard with secondary clamp	$ 1342.00
M-80	Low aluminum dome (4 1/4” high) (A2-MDL-80) (to poly dome)	$ 322.00
-R	2” external water dam (A2-WD)	$ 306.00
-U3	Underdeck clamp with cut away side (A2-C3-CO)	$ 637.00
-V	Fixed extension, (2”,3”,4”) (A2-V2, A2-V3 or A2-V4)	$ 860.00
-VG	Galvanized fixed extension, (2”, 3”, or 4”)	$ 1295.00
-W	Adjustable internal water dam (5” high x 4” Diameter) (A2-C3-W and W-31)	$ 1150.00
-W-1	Water proofing flange (A2-W-1)	$ 578.00
-W2	2” internal water dam (A2-C3- W and W -31)	$ 547.00
-W3	3” internal water dam (A2-C3- W and W -31)	$ 547.00
-W4	4” internal water dam (A2-C3- W and W -31)	$ 547.00
-Z	Extended wide flange on body (20”Dia. x 1/4 thick)	$ 1724.00

Design and dimensions are subject to modification. Prices do not include applicable taxes. Visit **www.mifab.com** for the most recent product information.

MIFAB®, Inc., 1321 West 119th Street, Chicago, Illinois 60643-5109, USA Toll Free: 1-800-465-2736 • Fax: 1-773-341-3049

All sales subject to MIFAB's® Terms & Warranties. Please refer to inside front cover. sales@mifab.com • Canada Toll Free: 1-800-387-3880

R1200-RG LARGE SUMP ROOF DRAIN WITH DUCTILE IRON ROOFGUARD

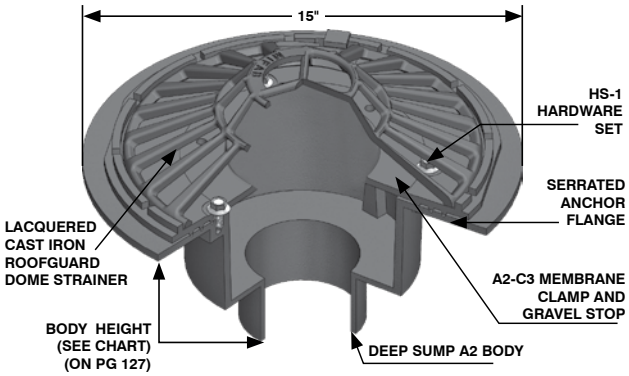

R1200-R-RG LARGE SUMP ROOF DRAIN WITH OVERFLOW & DUCTILE IRON ROOFGUARD

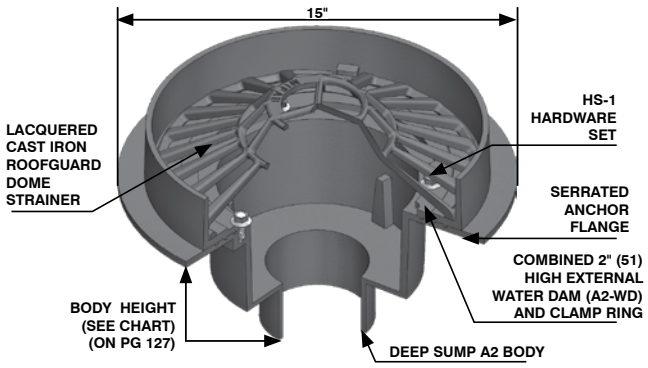

PARTS

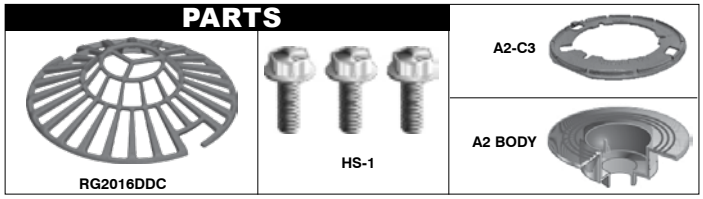

PARTS

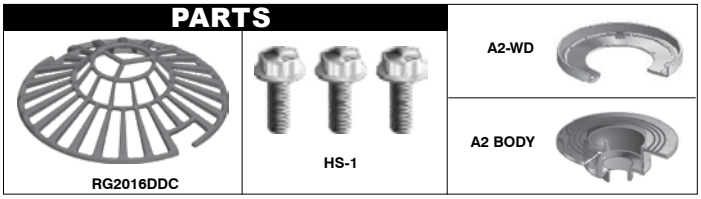

R1270-RG COMBINED LARGE SUMP ROOF AND OVERFLOW DRAIN WITH DUCTILE IRON ROOFGUARD

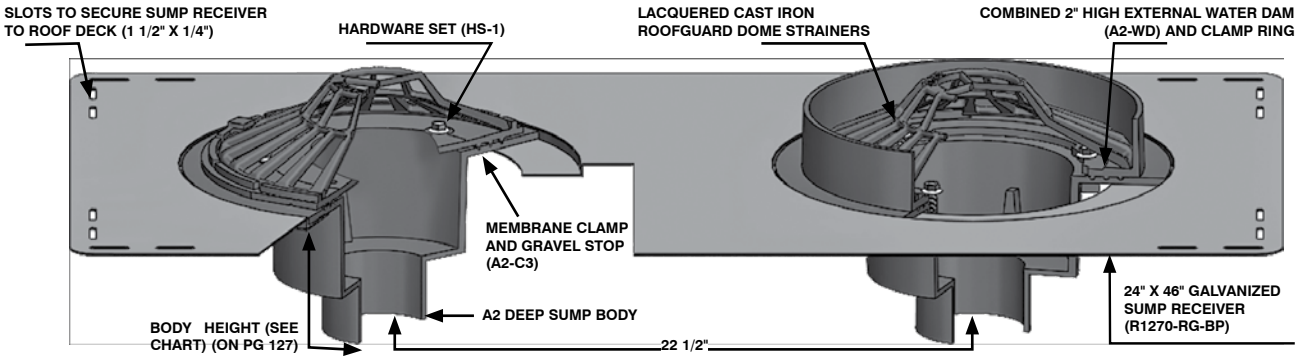

The List Prices and Optional Variations of the R1200-RG, R1200-R-RG and R1270-RG are the same as the List Prices and Optional Variations of the R1200-M, R1200-M-R and R1270-M.

R1220 MEDIUM SUMP ROOF DRAIN R1220

71.50 IN² FREE AREA DOME

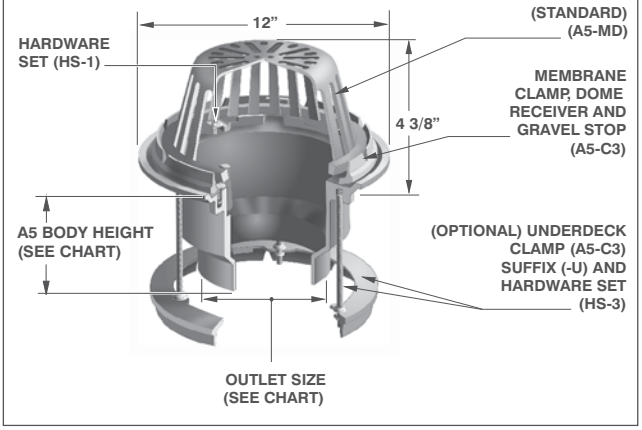

PARTS

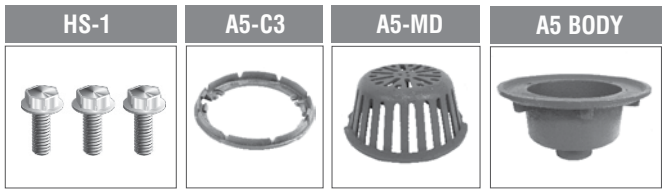

LACQUERED CAST IRON BODY WITH:			
MODEL NO.	WT Lbs.	OUTLET SIZE (NO HUB STANDARD)	CAST IRON DOME (-M)
R1222, 3, 4, 6	26.50	2”, 3”, 4”,6”	$ 816.00

R1220-EU MEDIUM SUMP EXTENSION ROOF DRAIN FOR 1 3/4” TO 7” INSULATION R1220-EU

71.50 In² FREE AREA DOME

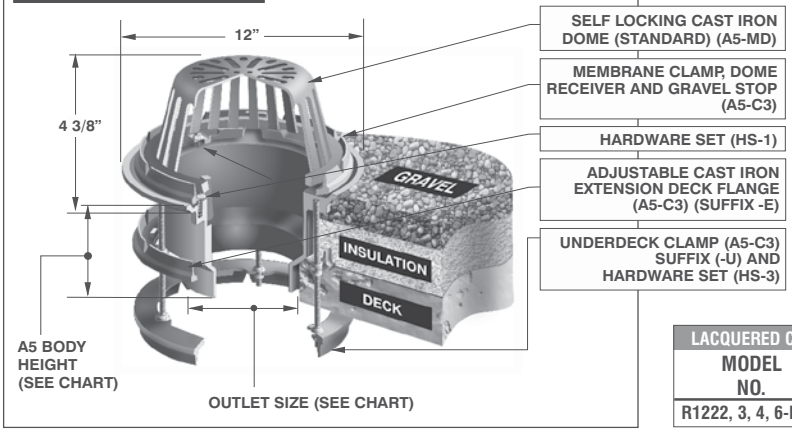

PARTS

LACQUERED CAST IRON BODY WITH:			
MODEL NO.	WT Lbs.	OUTLET SIZE (NO HUB STANDARD)	CAST IRON DOME (-M)
R1222, 3, 4, 6-EU	26.50	2”, 3”, 4”,6”	$ 1670.00

R1220, R1220-EU, R1220-G, R1220-JC, R1220-R AND R1220-RS OPTIONAL VARIATIONS: CONTINUE

SUFFIX	DESCRIPTION	LIST PRICE	SUFFIX	DESCRIPTION	LIST PRICE
-6	Vandal proof (Metal dome only) (H-1029)	$ 153.00	-83	Stainless steel mesh screen over metal dome	$ 608.00
-11	Acid resistant epoxy coated body, membrane clamp & dome	$ 1323.00	-B	Sump receiver (A5-BP)	$ 337.00
-12	Galvanized metal dome (add to -M Price)	$ 167.00	-E	Adjustable extension **(See page 110, point #7)**	$ 657.00
-12A	Galvanized body and membrane clamp	$ 433.00	-EG	Galvanized adjustable extension	$ 1477.00
-13	Galvanized body, membrane clamp and dome	$ 513.00			

See next page for more options

R1220-G MEDIUM SUMP ROOF DRAIN WITH BALLAST GUARD FOR IRMA ROOFS R1220-G

71.50 In² FREE AREA DOME

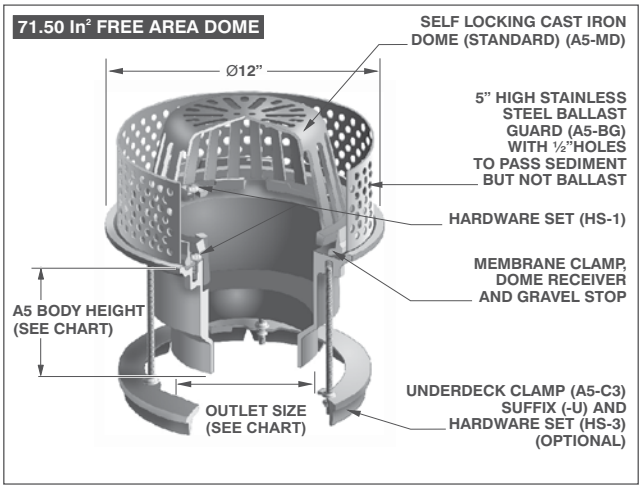

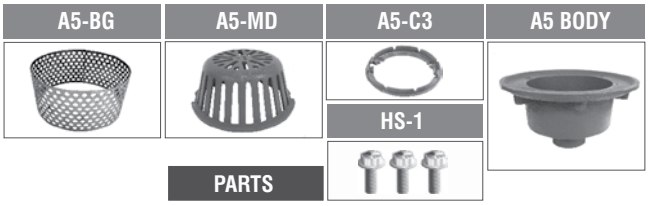

PARTS

LACQUERED CAST IRON BODY WITH:			
MODEL NO.	WT Lbs.	OUTLET SIZE (NO HUB STANDARD)	CAST IRON DOME (-M)
R1222, 3, 4, 6-G	32.00	2”, 3”, 4”,6”	$ 1632.00

A5 BODY HEIGHT CHART

PIPE SIZE	NO HUB (STANDARD)	INSIDE CAULK (X)
2”	6 1/2”	6.575”
3”	6 1/2”	6.575”
4”	6 1/2”	6.575”
6”	6 1/2”	6.575”

Design and dimensions are subject to modification. Prices do not include applicable taxes. Visit **www.mifab.com** for the most recent product information.
MIFAB®, Inc., 1321 West 119th Street, Chicago, Illinois 60643-5109, USA Toll Free: 1-800-465-2736 • Fax: 1-773-341-3049
All sales subject to MIFAB's® Terms & Warranties. Please refer to inside front cover. sales@mifab.com • Canada Toll Free: 1-800-387-3880

R1220-JC MEDIUM SUMP DRAIN WITH STAINLESS STEEL BALLAST GUARD

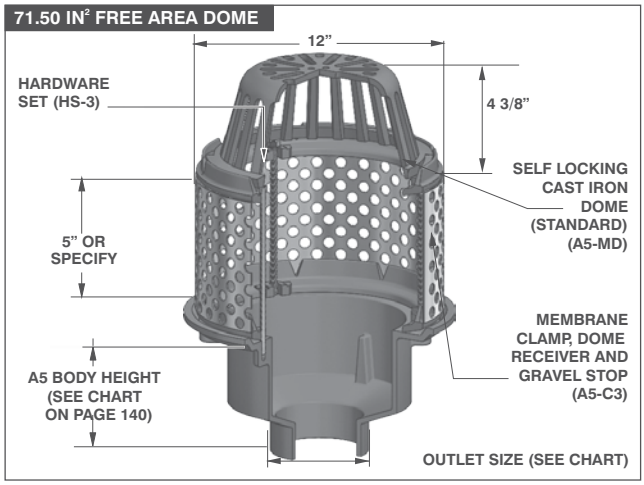

A5 BODY	A5-BG	A5-MD	A5-C3	HS-3

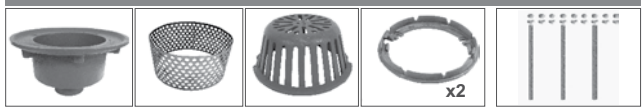

LACQUERED CAST IRON BODY WITH:

MODEL NO.	WT Lbs.	OUTLET SIZE	CAST IRON DOME (-M)
R1222,3,4,6-JC	21.00	2",3",4",6"	$ 1828.00

MEDIUM SUMP PROMENADE DECK DRAIN R1220-PR

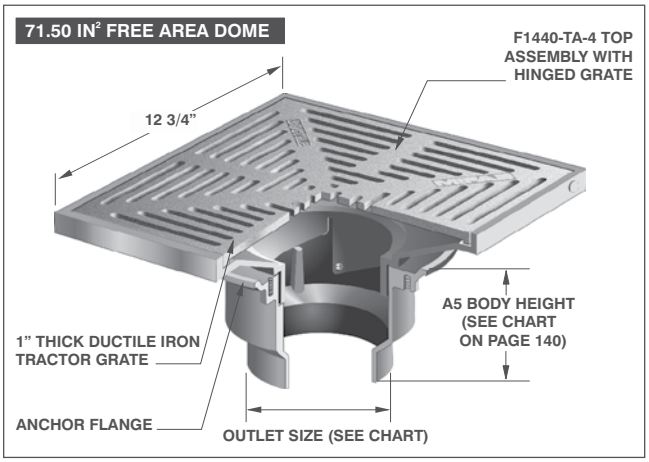

*Denotes Strainer finish (-1,-3 or -4)

PARTS	A5 BODY	F1440-TA-(*)

LACQUERED CAST IRON BODY WITH:

MODEL NO.	WT Lbs.	OUTLET SIZE	DUCTILE IRON (-4)	NICKEL BRONZE (VENEER)(-1)	STAINLESS STEEL (VENEER)(-3)
R1222,3,4,6-PR	53.00	2",3",4",6"	$ 1405.00	$ 2365.00	$ 2365.00

R1220, R1220-EU, R1220-G, R1220-JC, R1220-PR, R1220-R AND R1220-RS OPTIONAL VARIATIONS:

SUFFIX	DESCRIPTION	LIST PRICE	SUFFIX	DESCRIPTION	LIST PRICE
-G	Ballast guard (A5-BG)	$ 816.00	-U3	Underdeck clamp with cut away side (A5-C3-U)	$ 196.00
-HC	Adjustable ballast guard with secondary clamp	$1012.00	-W-1	Water proofing flange (A5-W-1)	$ 578.00
-JC	Ballast guard with secondary clamp	$1012.00	X	Inside caulk outlet (2",3",4",6")	No Add
-R	2" external water dam (A5-WD)	$ 255.00	-Z	Extended wide flange on body (20" dia. x 1/4" thick)	$ 1724.00
-U	Underdeck clamp (A5-C3)	$ 196.00	-5	Cast iron sediment bucket (A2-MB) for R1220-PR only	$ 337.00

R1220-R MEDIUM SUMP ROOF DRAIN WITH INTEGRAL 2" WATER DAM

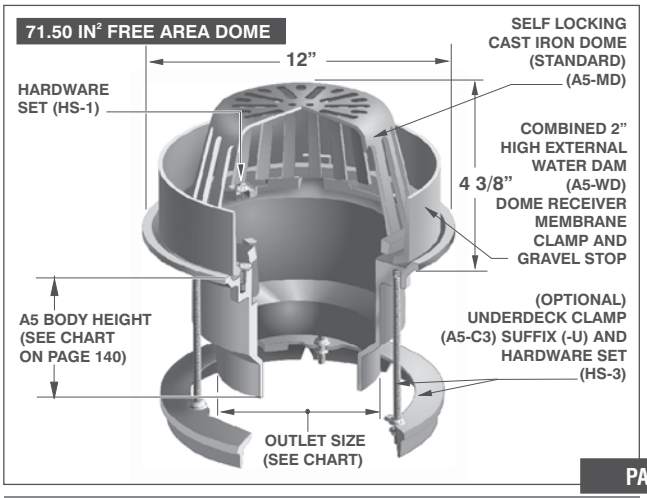

MEDIUM SUMP ROOF DECK CONDENSATE RECEPTOR DRAIN R1220-RS

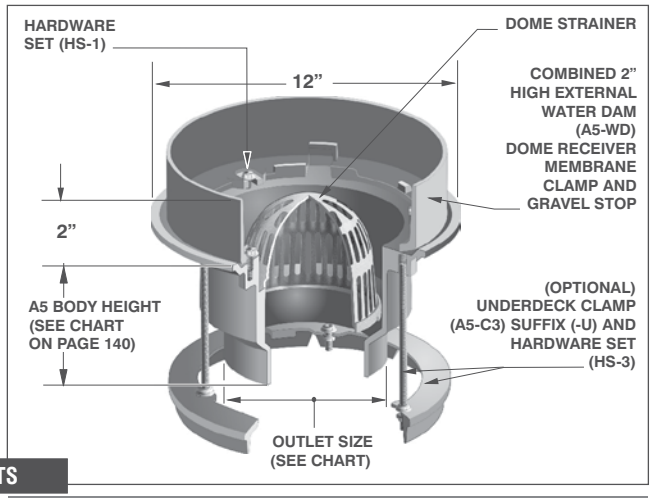

PARTS

A5 BODY	A5-MD	A5-WD	HS-1

LACQUERED CAST IRON BODY WITH:

MODEL NO.	WT Lbs.	OUTLET SIZE	CAST IRON DOME (-M)
R1222,3,4,6-R	21.00	2",3",4",6"	$ 1071.00

A5 BODY	A1-PD	A5-WD	HS-1

LACQUERED CAST IRON BODY WITH:

MODEL NO.	WT Lbs.	OUTLET SIZE	POLY DOME (STANDARD)
R1222,3,4,6-RS	28.00	2",3",4",6"	$ 937.00

R1250 EXTRA DEEP SUMP ROOF DRAIN R1250

125 In² FREE AREA DOME

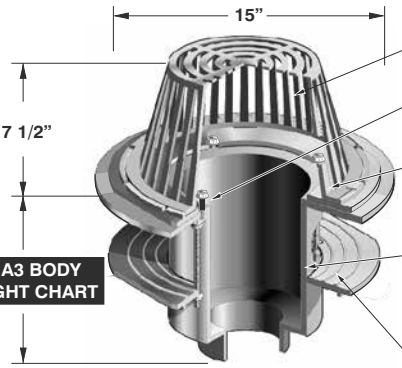

OPTIONAL CAST IRON DOME [A2-MD] SUFFIX (-M)

SELF LOCKING POLY DOME STRAINER (A2-PD)

HARDWARE SET (HS-1)

2 5/16” WIDE SERRATED MEMBRANE CLAMP AND GRAVEL STOP

A3 EXTRA DEEP SUMP BODY

OPTIONAL UNDERDECK CLAMP (A368-DC) SUFFIX (-U) AND HARDWARE SET (HS-3)

PARTS

(*) Denotes outlet size (2, 3, 4 or 6)

A3 BODY HEIGHT

PIPE SIZE	NO HUB (STANDARD)	PUSH ON (P)	THREADED “T”	INSIDE CAULK (X)	PVC / ABS (-30 / 31)
2”	12” 3/4’	12 3/4”	11 1/2”	12”	12 1/8”
3”	12” 3/4”	12 3/4”	11 7/8”	12”	12 3/8”
4”	12” 3/4”	12 3/4”	11 7/8”	12”	12 3/8”
5”	12”	-	11 7/8”	15 1/8”	-
6”	12”	15 7/8”	-	-	-

LACQUERED CAST IRON BODY WITH:

MODEL NO.	WT Lbs.	OUTLET SIZE	POLY DOME (STANDARD)	CAST IRON DOME (-M)
R1252,3,4	35.00	2”,3”,4”	$ 3072.00	$ 3343.00
R1255,6	35.00	5”,6”	$ 3469.00	$ 3740.00

R1250 OPTIONAL VARIATIONS:

SUFFIX	DESCRIPTION	LIST PRICE	SUFFIX	DESCRIPTION	LIST PRICE
-6	Vandal proof (metal dome only) (H-1029)	$ 164.00	-M-80	Low aluminum dome (4 1/4" high) (A2-MDL-80) (to poly dome)	$ 322.00
-11	Acid resistant epoxy coated body, membrane clamp & dome	$ 1764.00	P	Push on outlet (2”,3”,4”)	No Add
-12	Galvanized metal dome (add to -M Price)	$ 477.00	-R	2” external water dam (A2-WD) (A7-WD for R1260)	$ 306.00
-12B	Galvanized metal dome and membrane clamp	$ 1246.00	T	Threaded outlet (2”,3”,4”)	$ 107.00
-13	All galvanized	$ 1770.00	-U	Underdeck clamp (A368-DC)	$ 319.00
-30	PVC Socket connection (2”,3”,4”)	No Add	-V	Fixed extension, 2”-4”	$ 860.00
-31	ABS Socket connection (2”,3”,4”)	No Add	-VG	Galvanized fixed extension, (2”,3”,4”)	$ 1295.00
-81	Rough bronze dome (A2-MDL-81)	$ 1067.00	-W	Adjustable internal water dam (5” high x 4” DIA.) (A2-C3-W and W-31)	$ 1150.00
-83	Stainless steel mesh screen over metal dome (A2-SSD)	$ 655.00	-W-1	Water proofing flange (A2-W1)	$ 578.00
-B	Sump Receiver (A2-BP)	$ 356.00	-W2	2” internal water dam (W-31, 2” high)	$ 547.00
-E	Adjustable extension (See page 110, #7)	$ 943.00	-W3	3” internal water dam (W-31, 3” high)	$ 547.00
-EG	Galvanized extension	$ 1397.00	-W4	4” internal water dam (W-31, 4” high)	$ 547.00
-G	Ballast guard (A2-BG)	$ 1022.00	-W6	Adjustable water dam, 6” DIA. (A2-C3-W6)	$ 743.00
-HC	Adjustable ballast guard with secondary clamp	$ 1341.00	X	Inside caulk connection (2”,3”,4”)	No Add
-JC	Ballast guard with secondary clamp	$ 1341.00	-Z	Extended wide flange on body (20” dia. x 1/4” thick)	$ 1724.00

R1260 EXTRA LARGE SUMP, HIGH FLOW ROOF DRAIN R1260

125 In² FREE AREA DOME

SEE PAGE 143 FOR R1260 OPTIONAL VARIATIONS

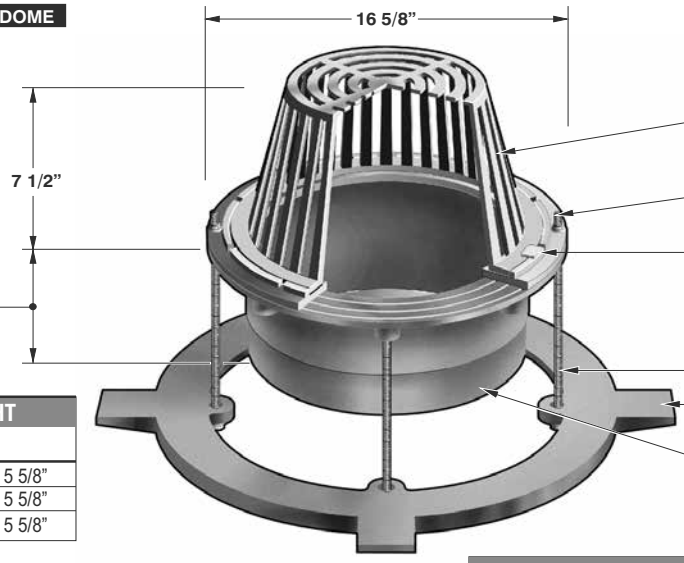

OPTIONAL CAST IRON DOME [A2-MD] SUFFIX (-M)

SELF LOCKING POLY DOME STRAINER (A2-PD)

HARDWARE SET (HS-7)

2 5/16” WIDE SERRATED MEMBRANE CLAMP AND GRAVEL STOP (A7-C3)

OPTIONAL UNDERDECK CLAMP (A7-UDC) SUFFIX (-U) AND HARDWARE SET (HS-8)

A7 DEEP SUMP BODY

DECK OPENING 13 1/2” WITH SUMP RECEIVER 16 1/2”

BODY HEIGHT

PIPE SIZE	
10” No Hub	5 5/8”
12” No Hub	5 5/8”
10” inside caulk	5 5/8”

LACQUERED CAST IRON BODY WITH:

MODEL NO.	WT Lbs.	OUTLET SIZE	POLY DOME (STANDARD)	CAST IRON DOME (-M)
R1261	29.50	10”	$ 2427.00	$ 2698.00
R1262	29.50	12”	$ 2620.00	$ 2891.00

DOME RECEIVER, CLAMP & EXTENSION RING GUIDE

BODY & OUTLET SIZE	DOME RECEIVER*	DECK CLAMP	EXTENSION RING & HARDWARE	SUMP RECEIVER
A7-10NH	A7-C3*	A7-UDC-10	A7-UDC-10 & HS-8	A7-BP
A7-12NH	A7-C3*	A7-UDC-12	A7-UDC-12 & HS-8	A7-BP
A7-10X	A7-C3*	A7-UDC-12	A7-UDC-12 & HS-8	A7-BP

* USES HS-7 HARDWARE SET

Design and dimensions are subject to modification. Prices do not include applicable taxes. Visit **www.mifab.com** for the most recent product information.
MIFAB®, Inc., 1321 West 119th Street, Chicago, Illinois 60643-5109, USA Toll Free: 1-800-465-2736 • Fax: 1-773-341-3049
All sales subject to MIFAB's® Terms & Warranties. Please refer to inside front cover. sales@mifab.com • Canada Toll Free: 1-800-387-3880

R1260 OPTIONAL VARIATIONS R1260

R1260 OPTIONAL VARIATIONS:					
SUFFIX	DESCRIPTION	LIST PRICE	SUFFIX	DESCRIPTION	LIST PRICE
-6	Vandal proof (metal dome only) (H-1029)	$ 164.00	-M-80	Low aluminum dome (4 1/4" high) (A2-MDL-80)	$ 322.00
-11	Acid resistant epoxy coated body, membrane clamp & dome	$ 2432.00	-R	2" external water dam (A7-WD)	$ 885.00
-12	Galvanized metal dome (add to -M Price)	$ 477.00	-U	Underdeck clamp (A7-UDC-10 for 10" and A7-UDC-12 for 12")	$ 319.00
-12B	Galvanized metal dome and membrane clamp	$ 864.00	-V	Fixed extension - 2", 3" or 4" (A7-V2,3 or 4)	$ 1289.00
-13	All galvanized	$ 1851.00	-VG	Galvanized fixed extension - 2", 3" or 4" (A7-V2,3 or 4)	$ 1947.00
-81	Rough bronze dome (A2-MDL-81)	$ 1067.00	-W	Adjustable internal water dam (5" high x 4" DIA.) (W-31)	$ 1392.00
-83	Stainless steel mesh screen over metal dome (A2-SSD)	$ 655.00	-W-1	Waterproofing flange (A7-W1)	$ 578.00
-B	Sump receiver (A7-BP)	$ 356.00	-W2	2" internal water dam (W-31, 2" high)	$ 1392.00
-E	Adjustable extension	$ 1289.00	-W3	3" internal water dam (W-31, 3" high)	$ 1392.00
-EG	Galvanized extension	$ 1947.00	-W4	4" internal water dam (W-31, 4" high)	$ 1392.00
-G	Ballast Guard (A2-BG)	$ 1022.00	-W6	Adjustable water dam (6" DIA.) (A7-C3-W6)	$ 1392.00
-JC	Ballast Guard with secondary clamp	$ 1341.00			

R1270 COMBINED LARGE SUMP ROOF DRAIN AND SECONDARY OVERFLOW DRAIN R1270

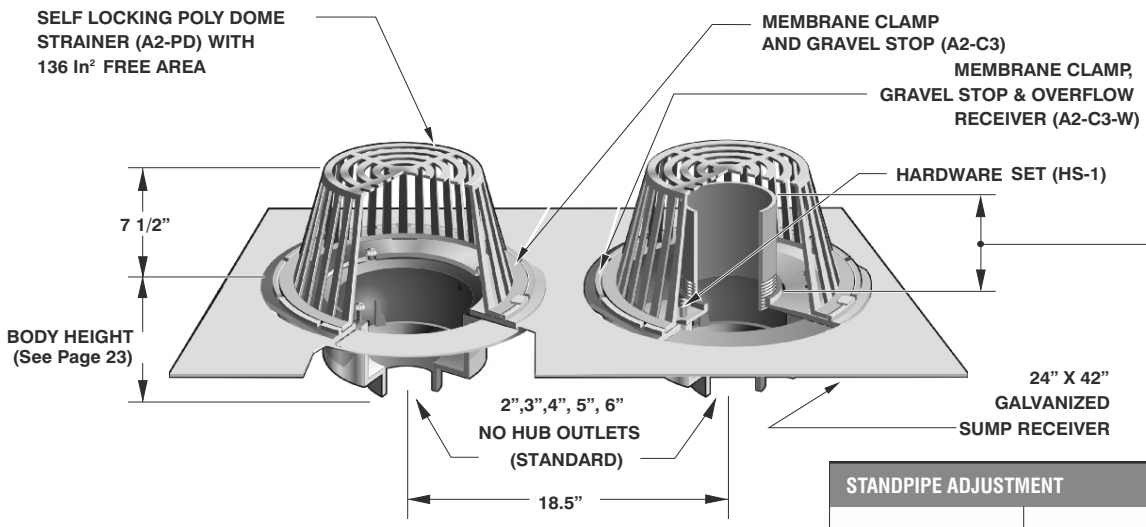

(R1270-BP) WITH TWO SETS OF HS-20 HARDWARE INCLUDED

STANDPIPE ADJUSTMENT	
MIN	MAX
2"	4 1/2"

PARTS

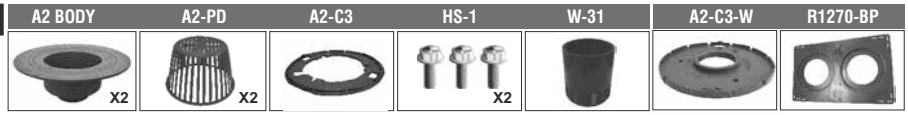

* A2-C3-W is standard with a 4" standpipe opening. For 6" outlets, specify A2-C3-W6 and W6-31.

LACQUERED CAST IRON BODY WITH:				
MODEL NO.	WT Lbs.	OUTLET SIZE	POLY DOME (STANDARD)	CAST IRON DOME (-M)
R1272,3,4	38.00	2",3",4"	$ 3234.00	$ 3776.00
R1275,6	42.00	5",6"	$ 4028.00	$ 4570.00
R1278	46.00	8"	$ 4817.00	$ 5359.00

Note: The quantity of dome bodies and clamps referenced below is two. The List Price stated is for 2 pieces of these items.

R1270 OPTIONAL VARIATIONS:					
SUFFIX	DESCRIPTION	LIST PRICE	SUFFIX	DESCRIPTION	LIST PRICE
-6	Vandal proof (metal domes only) (H-1029)	$ 328.00	-E	Adjustable extension (A2-H)	$ 1886.00
-11	Acid resistant epoxy coated body, membrane clamp & dome	$ 3528.00	-G	Ballast guards (A2-BG)	$ 2044.00
-12	Galvanized metal domes (add to -M Price)	$ 954.00	-M-80	Low profile aluminum domes (A2-MDL-80) (to poly dome)	$ 644.00
-12B	Galvanized metal domes and membrane clamps	$ 1728.00	NH	No hub outlets (2",3",4",6",8")	Standard
-13	All galvanized	$ 3540.00	P	Push on outlets (2",3",4",6")*	No Add
-28	Stainless Steel Bodies (Type 304) (2", 3", 4" NH only)	$ 9404.00	T	Threaded outlets (2", 3", 4", 5" or 6")	$ 214.00
-30	PVC socket connection bodies* (2",3",4")	No Add	-U	Underdeck clamps	$ 638.00
-31	ABS socket connection bodies* (2",3",4")	No Add	X	Inside caulk outlets (2", 3", 4", 5" or 6")	No Add
-81	Rough bronze domes (A2-MDL-81)	$ 2134.00			
-83	Stainless steel mesh screen over metal dome (A2-SSD)	$ 1310.00			

* 2", 3", 4" outlet sizes only

* Specify POG-6 for C.I. pipe and POG-6-PVC for PVC pipe 2", 3", 4" sizes use same gasket.

INTRODUCTION

MIFAB® has taken the leadership in providing superior siphonic drainage solutions specifically engineered for the U.S., Canada and Mexico markets. Siphonic roof drainage solutions have been successfully used for nearly 50 years. The Mifab® HYDROMAX™ siphonic solutions are based on the latest ASPE/ANSI 45 Standard and with hundreds of HYDROMAX™ projects using many thousands of HYDROMAX™ siphonic roof drains tested to ASME/ANSI A112.6.9:2005 drain Standard with IAPMO listing. The MIFAB HYDROMAX siphonic solutions are compliant with the latest IPC Chapter 11 requirements.

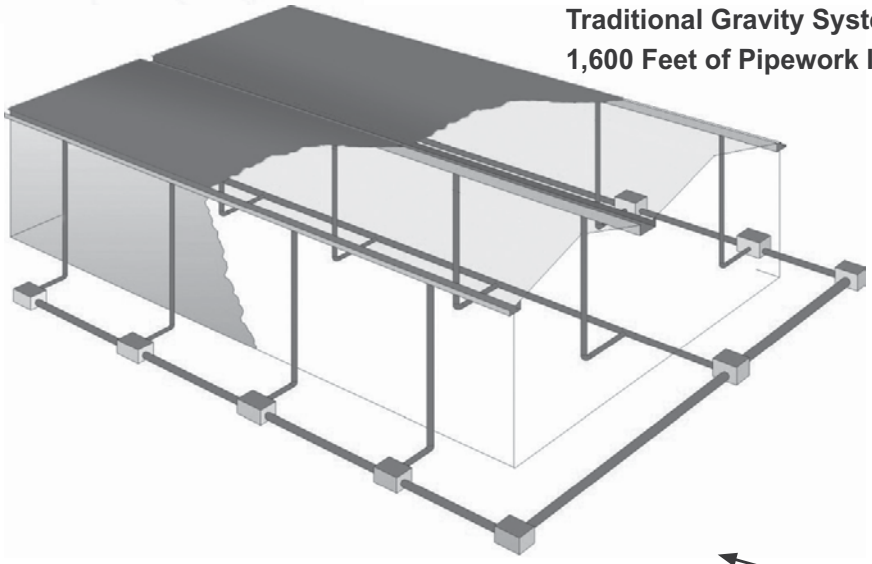

Reduction in Civils

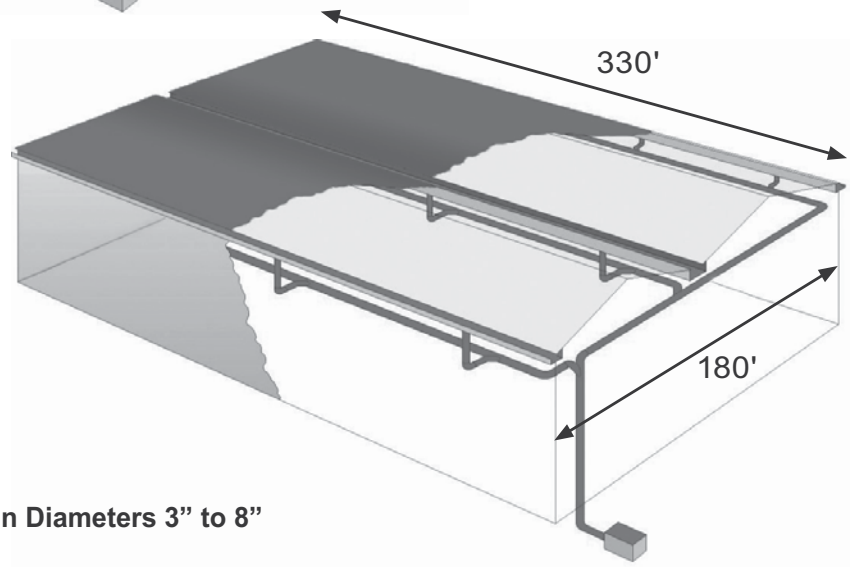

MIFAB® HydroMax™ Solution
Only 1,000 Feet of Pipework in Diameters 3” to 8”

The MIFAB HYDROMAX siphonic roof drain system is designed to have high flow capacities while minimizing ponding. Mifab's unique system prevents air entering into the pipework, combined with a hydraulically designed pipe system, allows for high performance siphonic flows. The advanced MIFAB® HydroTechnic™ online analytical design calculation software program which has been independently tested for full compliance with ASPE/ANSI 45, provides calculations for optimum system efficiency.

Design and dimensions are subject to modification. Prices do not include applicable taxes. Visit **www.mifab.com** for the most recent product information.
MIFAB®, Inc., 1321 West 119th Street, Chicago, Illinois 60643-5109, USA Toll Free: 1-800-465-2736 • Fax: 1-773-341-3049
All sales subject to MIFAB's® Terms & Warranties. Please refer to inside front cover. sales@mifab.com • Canada Toll Free: 1-800-387-3880

SOME OF HYDROMAX™ SIPHONIC ROOF DRAINS

Part No. MH-200
2" No Hub outlet Terrace Drain

Part No. MH-205-G
2" No Hub outlet Gutter Drain

Part No. MH-305-G
3" No Hub outlet Gutter Drain

Part No. MH-505-G
5" No Hub outlet Gutter Drain

Part No. MH-505-G-OF
5" No Hub outlet Gutter Overflow Drain

Part No. MH-T
Siphonic Trench Assembly

HYDROMAX™ siphonic roof drains are compliant the IPC 2015 (Roof Drain testing to ASME A112.6.9)

FOUR FLOW PATTERNS OF SIPHONIC DRAINAGE

Priming of Main Pipe Work

Stage 1- Light Rainfall - Wavy or Gravity flow

Air above water

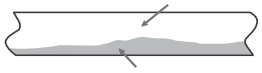

Gravity flow in pipework

Stage 2- Plug flow

Plug of water filling whole pipe at high velocities which achieves self-cleansing.

Air pockets driven down pipework

Tests have shown that **self-cleansing** can be achieved at as low as **10% to 15%** of the design rainfall rate.

Stage 3- Bubble flow

Water filling whole pipe

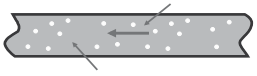

Air bubbles in suspension carried at high velocity

Stage 4- Full- bore flow

No more air entry – Air within Pipe now Fully Purged

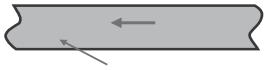

Water filling whole pipe

MIFAB's expertise is "on-call"

Increase the satisfaction your clients receive from you by having our staff assist you in the design process.

Our in-house engineers are available to assist you throughout the design process and our web-based Mifab HydroTechnic™ software allows easy support to any hydraulic calculations.

SYSTEM COMPARISON

Traditional Gravity

Water in annular flow

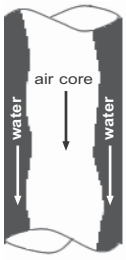

MIFAB® HydroMax™ Siphonic

No Air

ROOF DRAINS

MH-300, 400, 500, 600 — MIFAB® HYDROMAX™ PRIMARY SIPHONIC ROOF DRAINS

MODEL No.	K FACTOR	MAX CAPACITY (GPM)	List Price
MH-300	0.05	415	POA
MH-400	0.07	750	POA
MH-500	0.06	1280	POA
MH-600	0.11	1820	POA

MH-301, 401, 501, 601 — MIFAB® HYDROMAX™ SECONDARY OVERFLOW SIPHONIC ROOF DRAINS WITH 2” DAM

MODEL No.	K FACTOR	MAX CAPACITY (GPM)	List Price
MH-301	0.095	415	**POA**
MH-401	0.12	750	**POA**
MH-501	0.11	1280	**POA**
MH-601	0.14	1820	**POA**

MH-PG-D — MIFAB® HYDROMAX™ PARKING / PROMENADE DECK DRAIN

16” x 16” DUCTILE IRON GRATE WITH 3” OUTLET, 24” x 24” DUCTILE IRON GRATES WITH 4” AND 5” OUTLETS

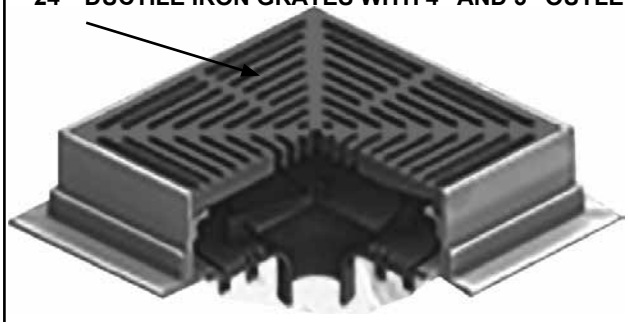

Part No. MH-PG-D
Parking Garage/Deck Siphonic Drain
(Available in 3", 4" or 5" No Hub outlet connections)

MODEL No.	K FACTOR	MAX CAPACITY (GPM)	List Price
MH-300-PG-D	0.05	415	**POA**
MH-400-PG-D	0.07	750	**POA**
MH-500-PG-D	0.06	1280	**POA**

Design and dimensions are subject to modification. Prices do not include applicable taxes. Visit **www.mifab.com** for the most recent product information.
MIFAB®, Inc., 1321 West 119th Street, Chicago, Illinois 60643-5109, USA
Toll Free: 1-800-465-2736 • Fax: 1-773-341-3049
All sales subject to MIFAB's® Terms & Warranties. Please refer to inside front cover.
sales@mifab.com • Canada Toll Free: 1-800-387-3880

Benefits of incorporating a MIFAB® HYDROMAX™ Siphonic Roof Drain System

- **Cost savings of 25 to 45%**
  Smaller Pipe Size
- **Horizontal pipes installed flat, no slope means substantial space savings.**
  Labor savings
- **Less ponding**
- **IPC 2018 compliant – All MIFAB® HYDROMAX™ drains have ponding graphs GPM of drain from testing to ASME A112.6.9**
- **Ideal for primary & secondary overflow roof drainage**
- **Flexibility in routing – frees up building space.**
- **Eliminate trenching under building floor.**

In order to correctly design a Mifab® HydroMax™ Siphonic roof drain system the following information is needed:

1. Designed rainfall rate (inches per Hour).
2. Piping material: Schedule 40 solid wall PVC or Cast Iron (If PVC, specify sizes you have access to).
3. For quicker turnaround time (2-3 days). A fully dimensioned riser drawing with GPM inflow (or individual areas with design rainfall rate).
4. For a standard turnaround time (no. of days dependent on complexity and size).
   A. Plans showing or that can help us determine and fully dimension the following (In AutoCAD .DWG file format only. We can't use .PDF files).
      i. Catchment areas or the GPM's per drain location (Roof Plans).
      ii. Preferred piping routes and discharge points (Floor Plans directly below roof.).
      iii. Elevation from drain to horizontal.
      iv. Elevation from horizontal to discharge.
5. Name, address, contact details including email address of Engineer of record or Design Build Contractor (Please include all contact info in order to set up access to HydroTechnic software).
6. Project title.
7. Project address (City, State & Zip at minimum).
8. Confirmation of below grade being designed to free flow or surcharge (If surcharging, we need to know the height between the center of siphonic horizontal line at discharge to the manhole grate cover).

The provision of all the above requested information allows MIFAB to assist with your siphonic roof drainage design.

We will provide access to our MIFAB® HydroTechnic™ analytical design calculation software for the Engineer of Record, designer and contractor as directed by the EoR. Within HydroTechnic™ you can access the hydraulic calculation, edit the design, print the design calculation report, BOM and drawing files. All dimensions, GPM's, Routes, Pipe Materials, etc. should be verified by EoR.

Please contact us at hydromax@mifab.com at any time for assistance.

We offer full-time FREE design support. Out experience includes 1,000's of Walmarts!

For access to the Hydro-Technic calculation program, go to

http://www.mifab.com/Catalog/Hydromax.pdf

And return to B.Ross@Hydromax.com

CONTACT INFORMATION

@ hydromax@mifab.com
1-773-341-3048

@ b.ross@HYDROMAX.com
(903) 200-4748

@ jgremchuk@mifab.com
773-341-3004

Please contact us at hydromax@mifab.com at any time for assistance.

R1300T SCUPPER DRAIN WITH ANGLE GRATE AND 90 DEGREE OUTLET R1300T

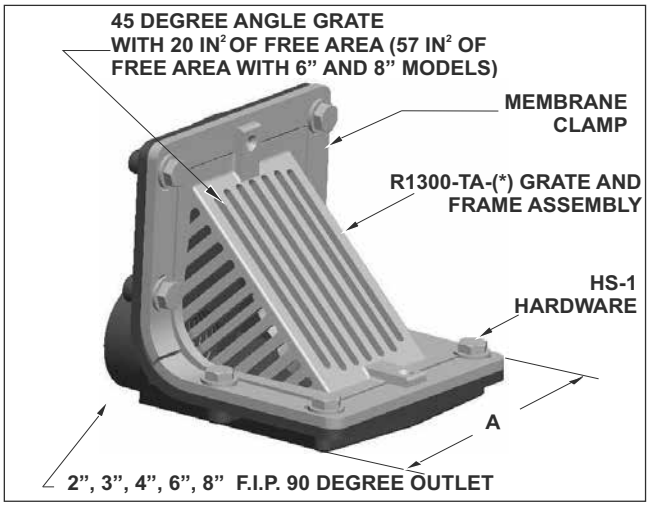

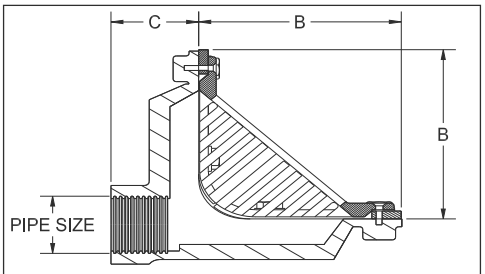

MODEL NUMBER	A	B	C
R1302,3,4T	7 1/2 [191]	6 3/8 [162]	2 3/4 [70]
R1306,8T	12 1/2 [318]	8 3/8 [213]	3 1/2 [89]

LACQUERED CAST IRON BODY WITH:

MODEL NO.	WT Lbs.	OUTLET SIZE	CAST IRON (-50)	NICKEL BRONZE (GRATE + CLAMP) (-1)	POLISHED BRONZE (GRATE + CLAMP) (-2)	ROUGH BRONZE (GRATE + CLAMP) (-2RB)
R1302,3,4T	18.00	2", 3", 4"	$ 806.00	$ 2114.00	$ 2114.00	$ 2114.00
R1306,8T	19.00	6", 8"	$ 1560.00	$ 2870.00	$ 2870.00	$ 2870.00

R1300T OPTIONAL VARIATIONS:

SUFFIX	DESCRIPTION	LIST PRICE	SUFFIX	DESCRIPTION	LIST PRICE
-NH	No Hub outlet (No Add)	See MI-850, pg. 288	-13	All galvanized (6", 8")	$ 624.00
-6	Vandal proof grate (TR25 Torx and pin)	$ 79.00	-28	Fabricated, Type 304, Stainless Steel Body, Grate and Clamp	$ 8400.00
-13	All galvanized (2",3",4")	$ 317.00	-83	Stainless steel mesh screen over grate	$ 693.00

R1310 SCUPPER DRAIN WITH ANGLE GRATE AND 45 DEGREE OUTLET R1310

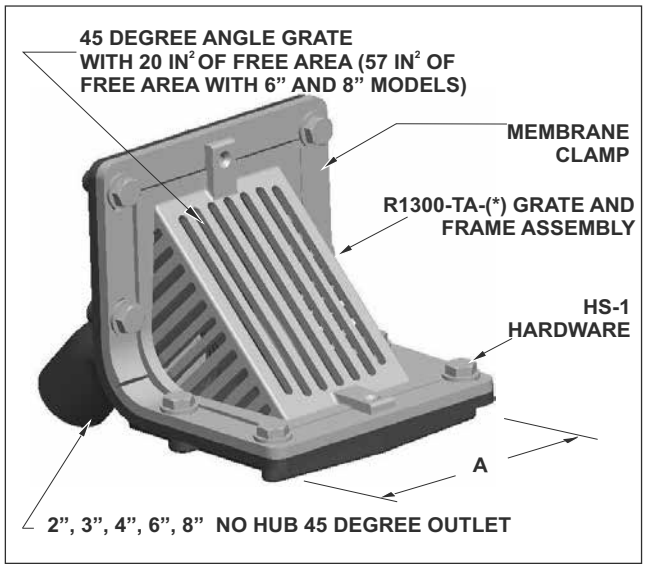

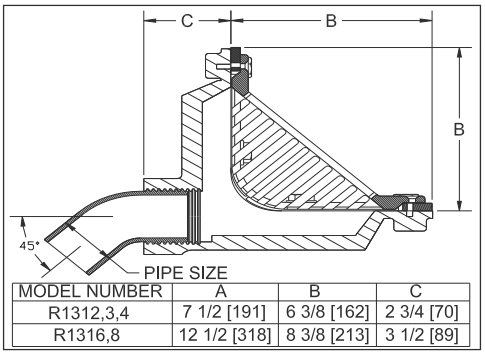

MODEL NUMBER	A	B	C
R1312,3,4	7 1/2 [191]	6 3/8 [162]	2 3/4 [70]
R1316,8	12 1/2 [318]	8 3/8 [213]	3 1/2 [89]

(*) Denotes strainer finish (-1,-2,-2RB, or -50)
(**) Denotes outlet size (2", 3", 4" or 6")

PARTS

R1300-P0(**)-50

R1300(**) T

MODEL NO.	WT Lbs.	OUTLET SIZE	LACQUERED CAST IRON BODY WITH: CAST IRON (-50)	NICKEL BRONZE (GRATE + CLAMP) (-1)	POLISHED BRONZE (GRATE + CLAMP) (-2)	ROUGH BRONZE (GRATE + CLAMP) (-2RB)
R1312, 3, 4	18.00	2", 3", 4",	$ 806.00	$ 2114.00	$ 2114.00	$ 2114.00
R1316, 8	19.00	6", 8"	$ 1560.00	$ 2870.00	$ 2870.00	$ 2870.00

R1310 OPTIONAL VARIATIONS:

SUFFIX	DESCRIPTION	LIST PRICE	SUFFIX	DESCRIPTION	LIST PRICE
-6	Vandal proof grate (TR25 Torx and pin)	$ 79.00	-13	All galvanized (6", 8")	$ 624.00
-13	All galvanized (2", 3", 4")	$ 317.00	-28	Fabricated, Type 304, Stainless Steel Body, Grate and Clamp	$ 8400.00
			-83	Stainless steel mesh screen over grate	$ 693.00

Design and dimensions are subject to modification. Prices do not include applicable taxes. Visit **www.mifab.com** for the most recent product information.
MIFAB®, Inc., 1321 West 119th Street, Chicago, Illinois 60643-5109, USA Toll Free: 1-800-465-2736 • Fax: 1-773-341-3049
All sales subject to MIFAB's® Terms & Warranties. Please refer to inside front cover. sales@mifab.com • Canada Toll Free: 1-800-387-3880

R1320T SCUPPER DRAIN WITH FLAT GRATE AND 90 DEGREE OUTLET R1320T

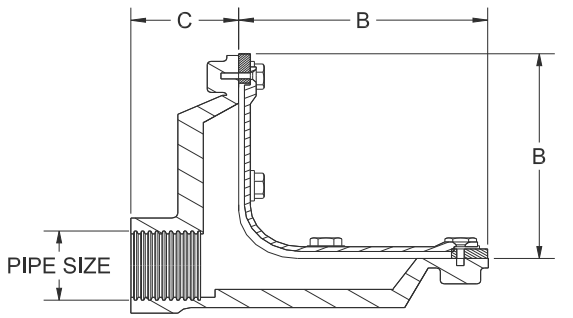

MODEL NUMBER	A	B	C
R1322,3,4T	7 1/2 [191]	6 3/8 [162]	2 3/4 [70]
R1326,8T	12 1/2 [318]	8 3/8 [213]	3 1/2 [89]

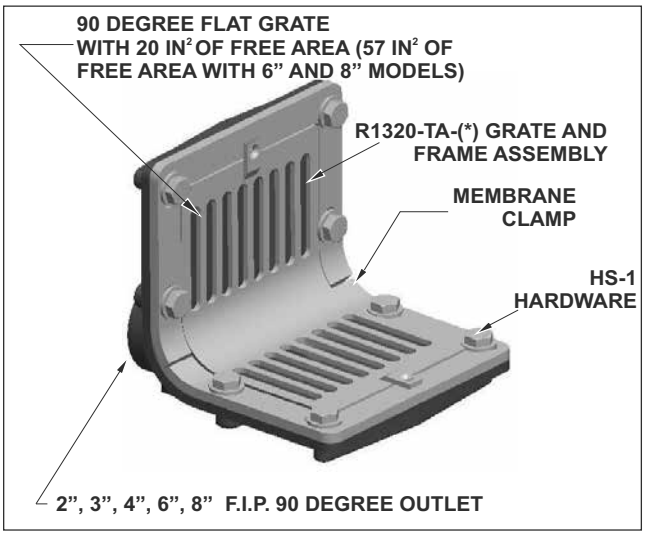

MODEL NO.	WT Lbs.	OUTLET SIZE	LACQUERED CAST IRON BODY WITH: CAST IRON (-50)	NICKEL BRONZE (GRATE + CLAMP) (-1)	POLISHED BRONZE (GRATE + CLAMP) (-2)	ROUGH BRONZE (GRATE + CLAMP) (-2RB)
R1322,3,4T	18.00	2", 3", 4",	$ 925.00	$ 2302.00	$ 1869.00	$ 2302.00
R1326,8T	19.00	6", 8"	$ 1733.00	$ 4185.00	$ 4185.00	$ 4185.00

R1320T OPTIONAL VARIATIONS:

SUFFIX	DESCRIPTION	LIST PRICE	SUFFIX	DESCRIPTION	LIST PRICE
-NH	No Hub outlet (No Add)	**See MI-850, pg. 288**	**-13**	All galvanized (6", 8")	$ 624.00
-6	Vandal proof grate (TR25 Torx and pin)	$ 79.00	**-28**	Fabricated, Type 304, Stainless Steel Body, Grate & Clamp	$ 8400.00
-13	All galvanized (2", 3", 4") orx and pin)	$ 317.00	**-83**	Stainless steel mesh screen over grate	$ 693.00

R1330 SCUPPER DRAIN WITH FLAT GRATE AND 45 DEGREE OUTLET R1330

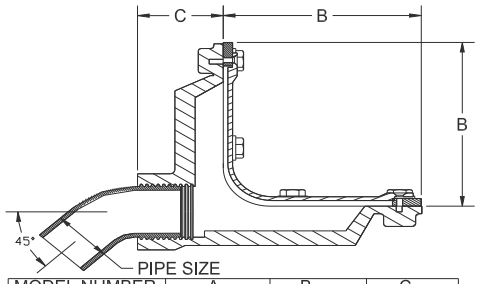

MODEL NUMBER	A	B	C
R1332,3,4	7 1/2 [191]	6 3/8 [162]	2 3/4 [70]
R1336,8	12 1/2 [318]	8 3/8 [213]	3 1/2 [89]

PARTS

R1300-P0(**)-50

R1320(**) T

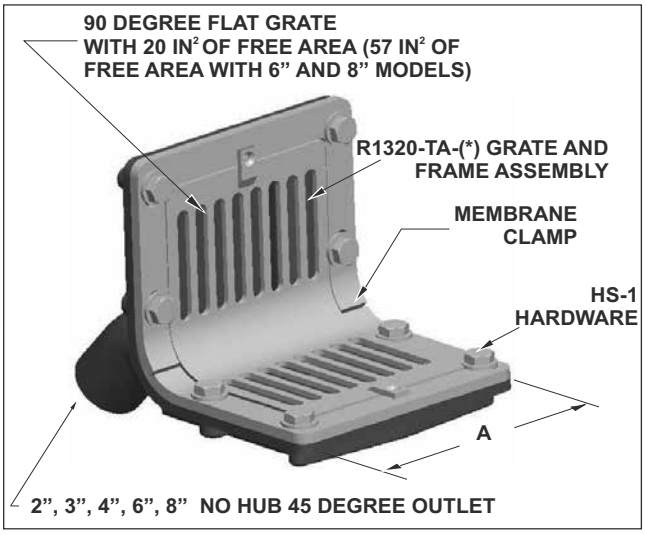

MODEL NO.	WT Lbs.	OUTLET SIZE	LACQUERED CAST IRON BODY WITH: CAST IRON (-50)	NICKEL BRONZE (GRATE + CLAMP) (-1)	POLISHED BRONZE (GRATE + CLAMP) (-2)	ROUGH BRONZE (GRATE + CLAMP) (-2RB)
R1332, 3, 4	18.00	2", 3", 4",	$ 925.00	$ 2302.00	$ 1869.00	$ 2302.00
R1336, 8	19.00	6", 8"	$ 1733.00	$ 4185.00	$ 4185.00	$ 4185.00

R1330 OPTIONAL VARIATIONS:

SUFFIX	DESCRIPTION	LIST PRICE	SUFFIX	DESCRIPTION	LIST PRICE
-6	Vandal proof grate (TR25 Torx and pin)	$ 79.00	**-13**	All galvanized (6", 8")	$ 624.00
-13	All galvanized (2", 3", 4")	$ 317.00	**-28**	Fabricated, Type 304, Stainless Steel Body, Grate & Clamp	$ 8400.00
			-83	Stainless steel mesh screen over grate	$ 693.00

R1400 BALCONY DRAIN WITH BOTTOM OUTLET R1400

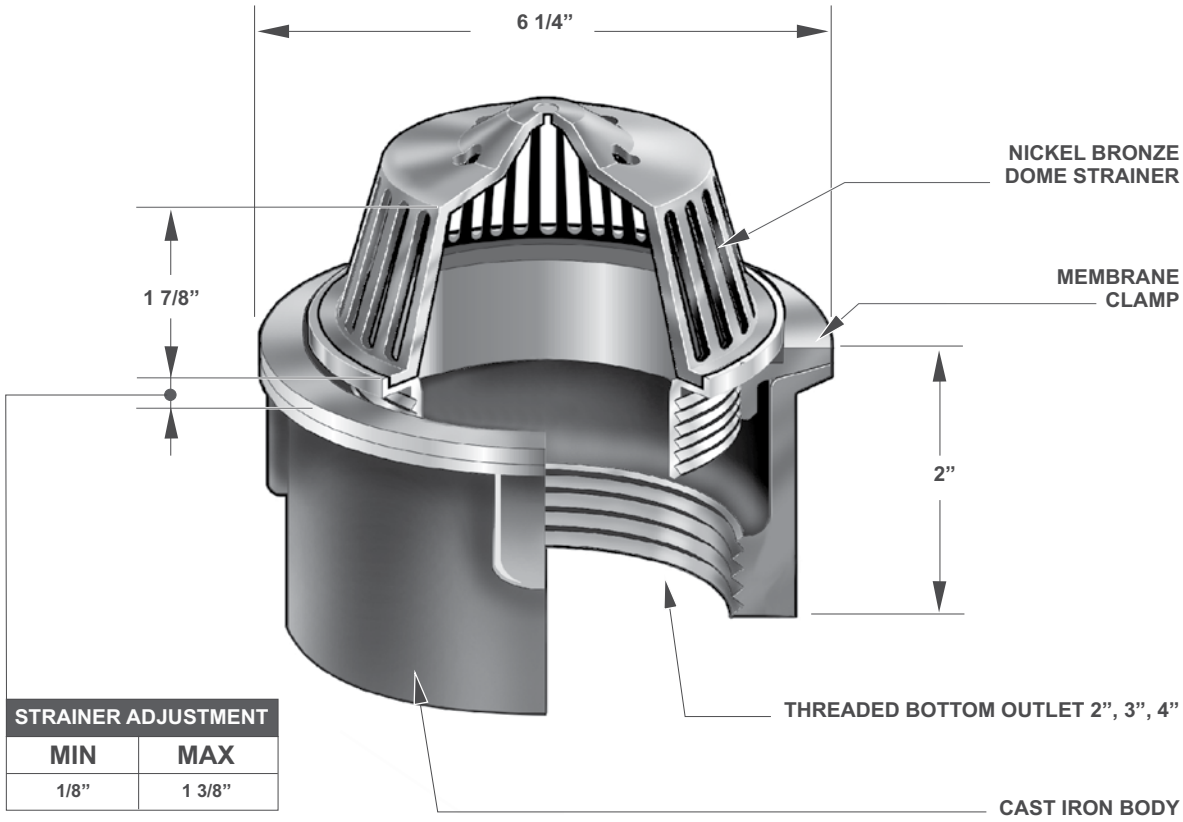

STRAINER ADJUSTMENT	
MIN	MAX
1/8”	1 3/8”

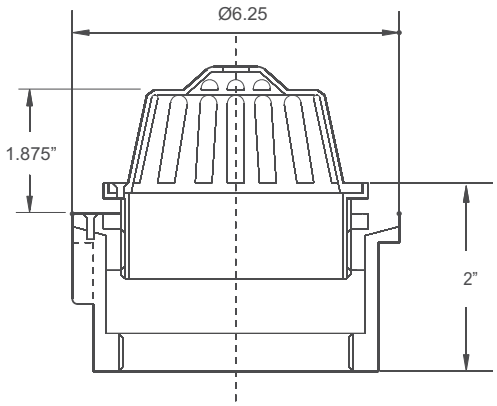

NOTE: Any F1100 Series strainer can be used in place of the K dome strainer. See pages 50 and 51 for selection and prices.

PARTS

K-(*)	R140(**)-CA

(*) Denotes strainer finish (-1,-2,-2RB, -3, or -50)
(**) Denotes outlet size (2”, 3” or 4”)

MODEL NO.	WT Lbs.	OUTLET SIZE	LACQUERED CAST IRON BODY WITH MEMBRANE CLAMP AND:			
			CAST IRON (-50) DOME	ROUGH BRONZE (-2RB) DOME	POLISHED BRONZE (-2) DOME	NICKEL BRONZE FOR STAINLESS STEEL (-1) OR (-3) DOME
R1402, 3	8.00	2”, 3”	$ 616.00	$ 1294.00	$ 1031.00	$ 1294.00
R1404	8.00	4”	$ 1328.00	$ 1709.00	$ 1443.00	$ 1709.00

R1400 OPTIONAL VARIATIONS:

SUFFIX	DESCRIPTION	LIST PRICE	SUFFIX	DESCRIPTION	LIST PRICE
-6	Vandal proof dome (TR25 Torx and pin)	$ 79.00	-HM-2RB	High dome Rough Bronze	$ 112.00
-13	Galvanized body and membrane clamp (2”, 3”, 4”)	$ 219.00	-HM-PB	High dome Polished Bronze	$ 144.00
-14	Flat grate (5-1 or 5-3)	No Add	-HM-NB	High dome Nickel Bronze	$ 144.00
			-83	Stainless steel mesh screen over dome	$ 689.00

Design and dimensions are subject to modification. Prices do not include applicable taxes. Visit **www.mifab.com** for the most recent product information.
MIFAB®, Inc., 1321 West 119th Street, Chicago, Illinois 60643-5109, USA Toll Free: 1-800-465-2736 • Fax: 1-773-341-3049
All sales subject to MIFAB's® Terms & Warranties. Please refer to inside front cover. sales@mifab.com • Canada Toll Free: 1-800-387-3880

R1410 BALCONY DRAIN WITH 45 DEGREE OUTLET R1410

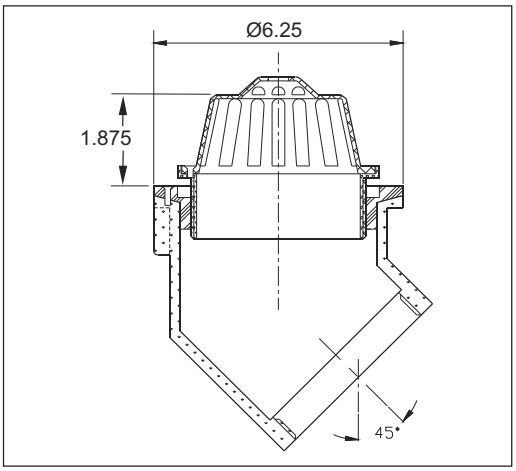

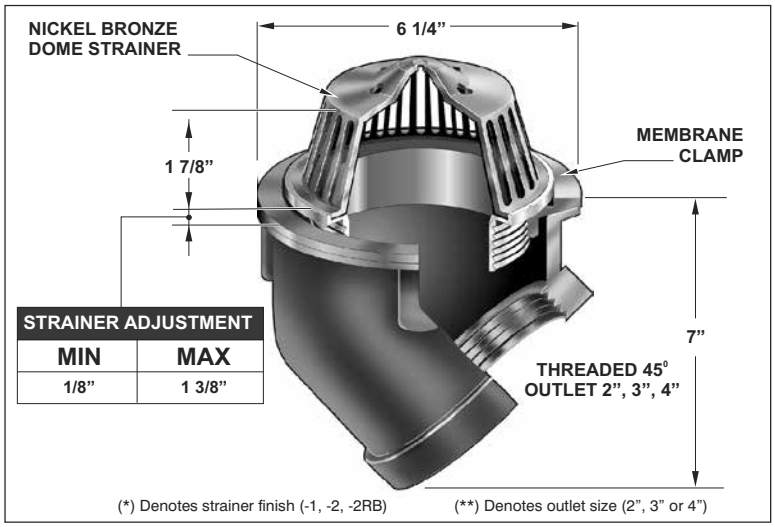

LACQUERED CAST IRON BODY WITH MEMBRANE CLAMP AND:						
MODEL NO.	WT Lbs.	OUTLET SIZE	CAST IRON DOME (-50)	ROUGH BRONZE DOME (-2RB)	POLISHED BRONZE DOME (-2)	NICKEL BRONZE OR S.S. DOME (-1) OR (-3)
R1412	8.00	2"	$ 545.00	$ 990.00	$ 990.00	$ 990.00
R1413,4	8.00	3", 4"	$ 798.00	$ 1272.00	$ 1272.00	$ 1272.00

PARTS K-(*) R141(**)-CA

R1410 OPTIONAL VARIATIONS:					
SUFFIX	DESCRIPTION	LIST PRICE	SUFFIX	DESCRIPTION	LIST PRICE
-6	Vandal proof dome (TR25 Torx and pin)	$ 79.00	-HM-PB	High dome Polished Bronze	$ 144.00
-13	Galvanized body and membrane clamp	$ 219.00	-HM-NB	High dome Nickel Bronze	$ 144.00
-14	Flat strainer (5-1 or 5-3)	No Add	-83	Stainless steel mesh screen over dome	$ 689.00
-HM-2RB	High dome Rough Bronze	$ 112.00			

R1420 BALCONY DRAIN WITH 90 DEGREE OUTLET R1420

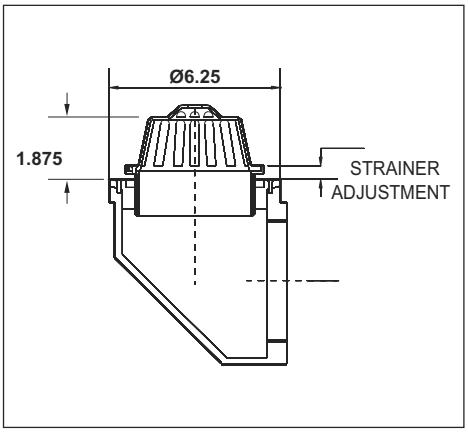

(*) Denotes strainer finish (-1, -2, -2RB) (**) Denotes outlet size (2", 3" or 4")

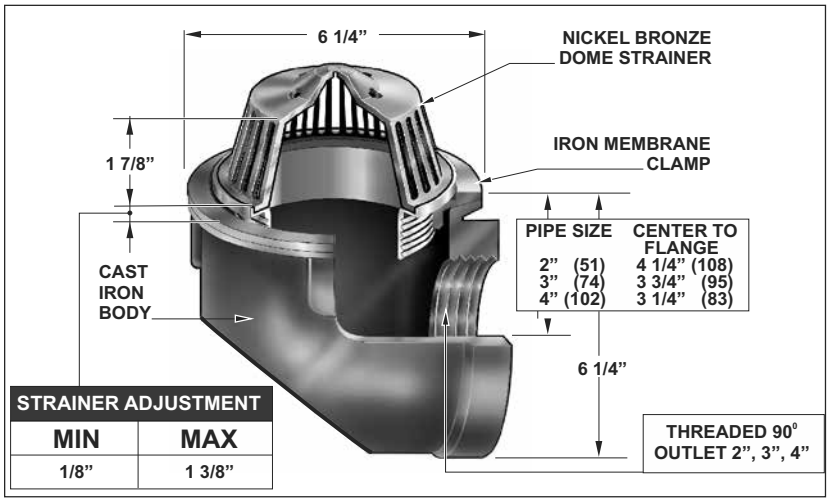

LACQUERED CAST IRON BODY WITH MEMBRANE CLAMP AND:						
MODEL NO.	WT Lbs.	OUTLET SIZE	CAST IRON DOME (-50)	ROUGH BRONZE DOME (-2RB)	POLISHED BRONZE DOME (-2)	NICKEL BRONZE OR S.S. DOME (-1) OR (-3)
R1422	8.00	2"	$ 545.00	$ 990.00	$ 990.00	$ 990.00
R1423,4	8.00	3", 4"	$ 798.00	$ 1272.00	$ 1272.00	$ 1272.00

PARTS K-(*) R142(**)-CA

R1420 OPTIONAL VARIATIONS:					
SUFFIX	DESCRIPTION	LIST PRICE	SUFFIX	DESCRIPTION	LIST PRICE
-6	Vandal proof dome (TR25 Torx and pin)	$ 79.00	-HM-PB	High dome Polished Bronze	$ 144.00
-13	Galvanized body and membrane clamp	$ 219.00	-HM-NB	High dome Nickel Bronze	$ 144.00
-14	Flat strainer (5-1 or 5-3)	No Add	-83	Stainless steel mesh screen over dome	$ 689.00
-HM-2RB	High dome Rough Bronze	$ 112.00			

R1510 4” x 3” RECTANGULAR DOWNSPOUT BOOT R1510

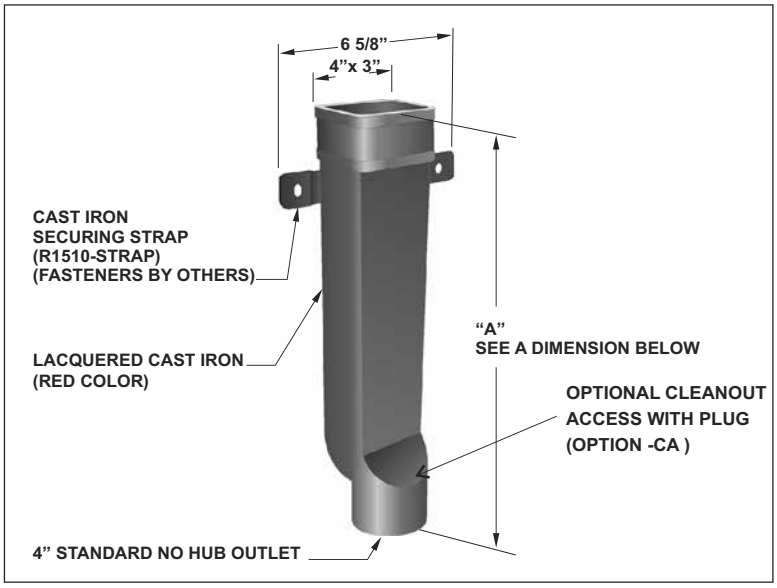

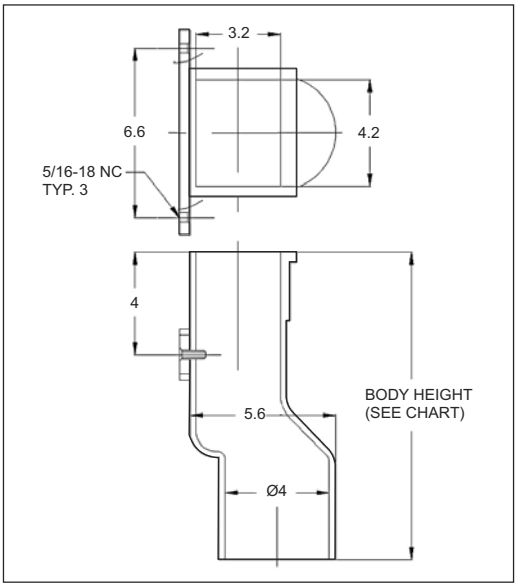

MODEL NO.	WT Lbs.	BODY SIZE	“A” LENGTH	NO HUB PIPE SIZE	LIST PRICE
R1510-12	15.00	4” x 3”	12”	4”	$ **863.00**
R1510-18	18.00	4” x 3”	18”	4”	$ **1136.00**
R1510-24	22.00	4” x 3”	24”	4”	$ **2024.00**

R1510 OPTIONAL VARIATIONS:

SUFFIX	DESCRIPTION	LIST PRICE
-13	All galvanized	$ **689.00**
-CA	Cleanout access with plug (located on bottom)	$ **885.00**

R1520 5” x 4” RECTANGULAR DOWNSPOUT BOOT R1520

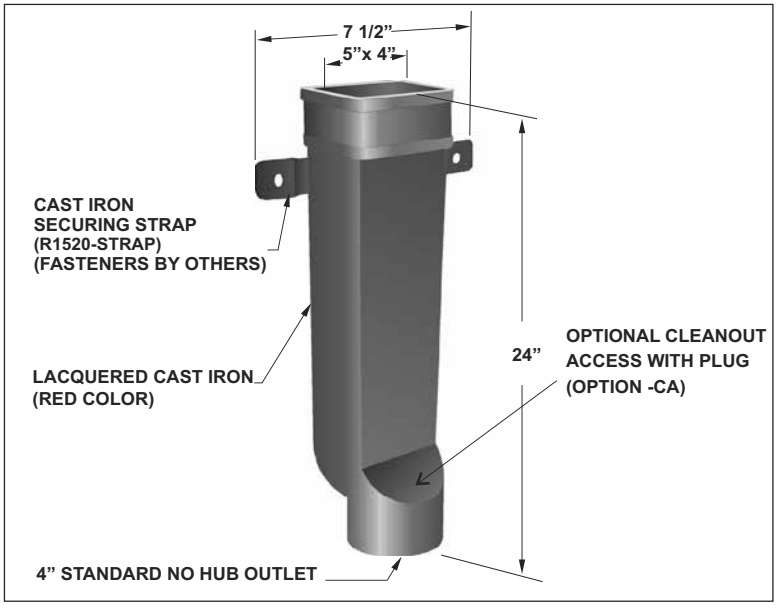

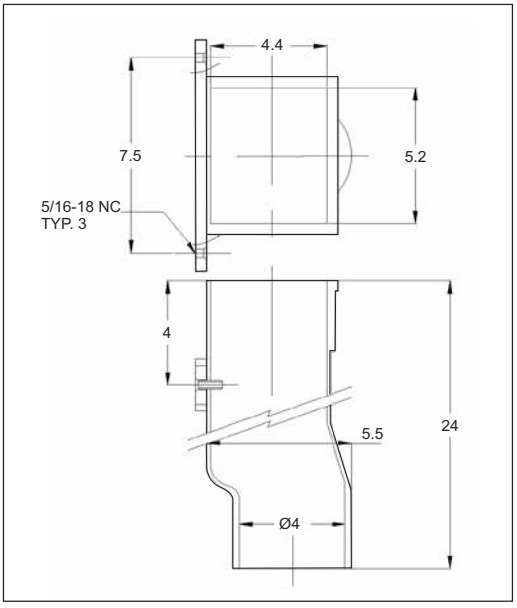

MODEL NO.	WT Lbs.	BODY SIZE	“A” LENGTH	NO HUB PIPE SIZE	LIST PRICE
R1520	22.00	5” x 4”	24”	4”	$ **1810.00**

R1520 OPTIONAL VARIATIONS:

SUFFIX	DESCRIPTION	LIST PRICE
-13	All galvanized	$ **1265.00**
-CA	Cleanout access with plug (located on bottom)	$ **885.00**

Design and dimensions are subject to modification. Prices do not include applicable taxes. Visit **www.mifab.com** for the most recent product information.
MIFAB®, Inc., 1321 West 119th Street, Chicago, Illinois 60643-5109, USA Toll Free: 1-800-465-2736 • Fax: 1-773-341-3049
All sales subject to MIFAB's® Terms & Warranties. Please refer to inside front cover. sales@mifab.com • Canada Toll Free: 1-800-387-3880

R1530 4” ROUND DOWNSPOUT BOOT R1530

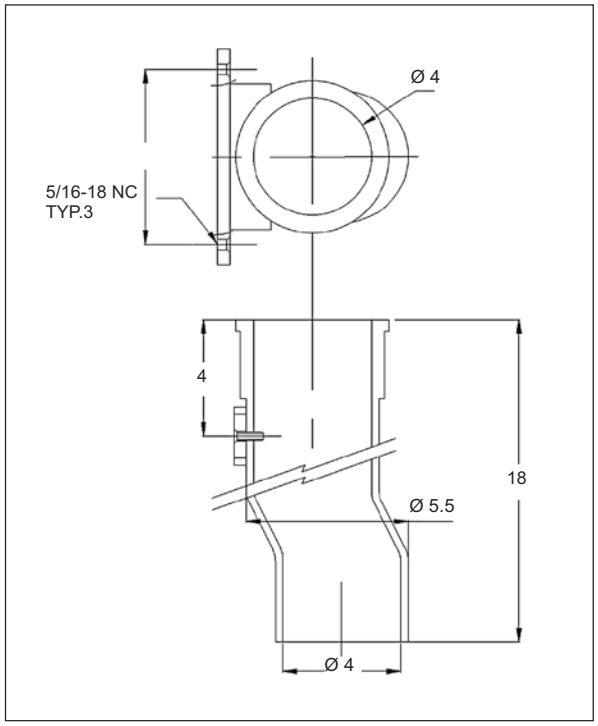

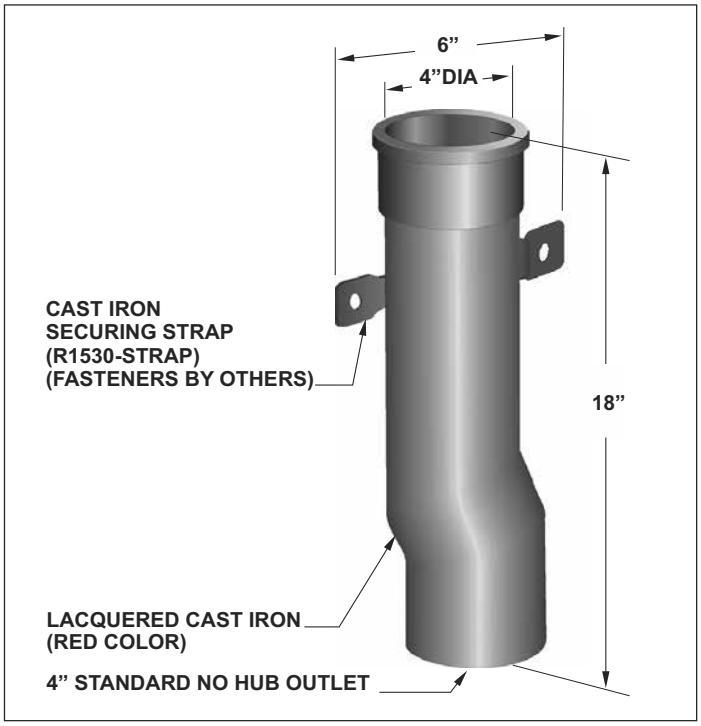

MODEL NO.	WT Lbs.	BODY SIZE	“A” LENGTH	NO HUB PIPE SIZE	LIST PRICE
R1530	15.00	4” dia.	18”	4”	$ 1256.00

R1530 OPTIONAL VARIATIONS:

SUFFIX	DESCRIPTION	LIST PRICE
-13	All galvanized	$ 1265.00
-CA	Cleanout access with plug (located 8” down from top)	$ 885.00

R1640 PARAPET SCUPPER SLEEVE R1640

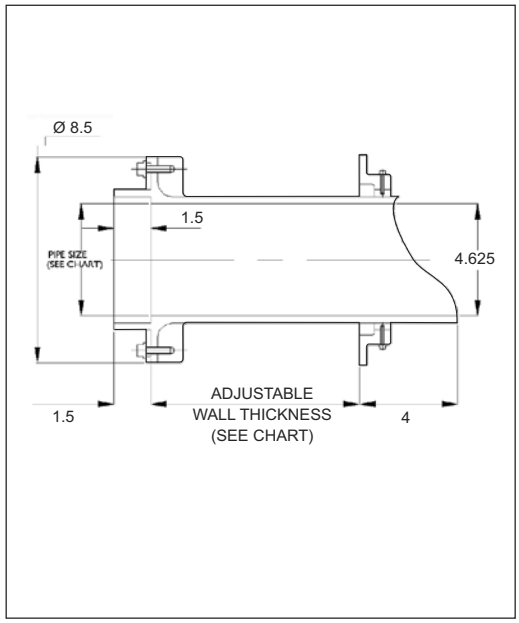

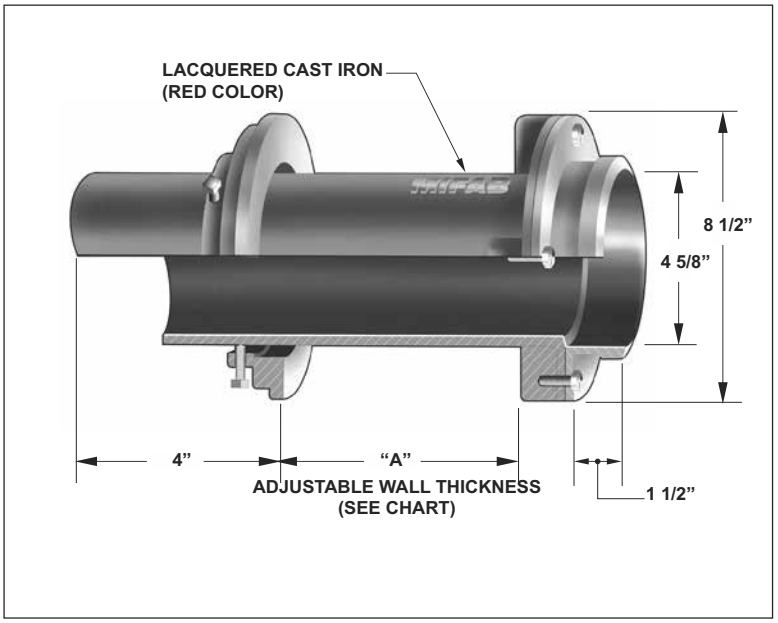

MODEL NO.	WT Lbs.	NO HUB PIPE SIZE	“A” WALL THICKNESS (MAXIMUM)	LIST PRICE
R1640-8	26.00	4”	8”	$ 1290.00
R1640-11	29.00	4”	11”	$ 1290.00
R1640-13	31.00	4”	13”	$ 1687.00
R1640-17	35.00	4”	17”	$ 1808.00
R1640-22	40.00	4”	22”	$ 1932.00

R1640 OPTIONAL VARIATIONS:

SUFFIX	DESCRIPTION	LIST PRICE
-13	All galvanized	$ 306.00

R1810 UNIVERSAL MEMBRANE CLAMP AND DOME RECEIVER

NOTE: Will also bolt directly onto roof drains from the following manufacturers: Josam, J.R. Smith, Wade, Watts and Zurn, and will accept MIFAB’s greater free area (125in2) high profile polydome (A2-PD), low profile aluminum dome (A2-MDL-80) and / or A2-MD cast iron dome. Use with HS-9 hardware set. Use HS-2 hardware with MIFAB A2 bodies.

MODEL NO.	WT Lbs.	DESCRIPTION	LIST PRICE
R1810	8.75	Universal Membrane Clamp	$ 384.00

R1810 OPTIONAL VARIATIONS:		
SUFFIX	DESCRIPTION	LIST PRICE
-PD	Poly dome	$ 179.00
-HS-2	Regular 3 bolt hardware	$ 23.00
-HS-9	Hardware pack to connect to JaSaWaZ domes	$ 28.50

12” ROUND, FLAT DECK ROOF DRAIN R1820

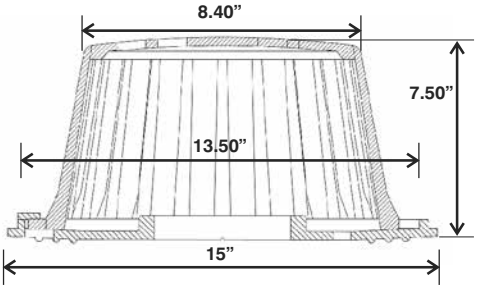

R1820 (A2-C3-W with A2-MD)

MODEL NO.	WT Lbs.	OUTLET SIZE (THREADED)	CAST IRON DOME (-M)	ROUGH BRONZE DOME (-81)
R1824	22	4” I.P.S.	$ 1181.00	$ 2248.00
R1826	24	6” I.P.S.	$ 2049.00	$ 3115.00

R1820 OPTIONAL VARIATIONS:		
SUFFIX	DESCRIPTION	LIST PRICE
-6	Vandal proof (H-1029)	$ 164.00
-11	All acid resistant epoxy coated	$ 512.00
-13	All galvanized	$ 512.00
-83	Stainless steel mesh scren over dome (A2-SSD)	$ 655.00
-B	Sump receiver (A2-BP)	$ 356.00
-G	Ballast Guard	$ 1022.00
-U	Underdeck clamp (A2-C3)	$ 319.00

R1850 VENT STACK FLASHING SLEEVE R1850

NOTE: The R1854 is made out of lacquered cast iron material. All other sizes are made from fabricated, 14 gauge galvanized steel that is powder, epoxy coated with an electro-static application.

MODEL NO.	PIPE SIZE	BODY HEIGHT	“C”	“D”	“K”	WEIHT Lbs.	LIST PRICE
R1851.5	1 1/2”	8”	6 1/2”	2 5/8”	3”	12	$ 450.00
R1852	2”	8 1/8”	6 1/2”	3 1/8”	3”	11	$ 450.00
R1853	3”	8 1/8”	8 1/2”	4 1/4”	3 1/8”	13	$ 734.00
R1854	4”	8 1/2”	8 1/2”	5 1/4”	3 1/8”	18	$ 734.00
R1855	5”	8 1/2”	9 1/2”	6 1/2”	2 1/2”	20	$ 1336.00
R1856	6”	8 1/8”	10 1/2”	7 1/2”	3 1/8”	26	$ 1336.00
R1858	8”	8 3/4”	14 1/2”	9 3/4”	2 3/4”	52	$ 1554.00
R1850-10	10”	8 3/4”	16 1/2”	11 5/8”	2 3/4”	45	$ 1764.00
R1850-12	12”	8 3/4”	18 1/2”	13 5/8”	2 3/4”	60	$ 2466.00

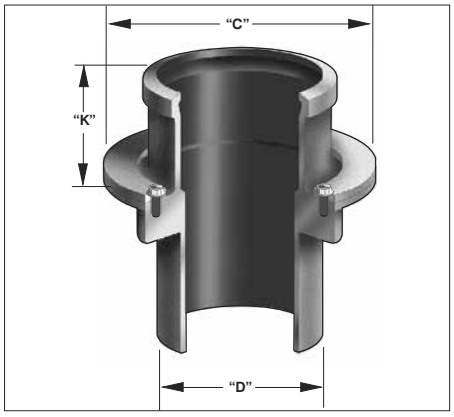

R1850 OPTIONAL VARIATIONS:		
SUFFIX	DESCRIPTION	LIST PRICE
-13	Galvanized cast iron	$ 348.00

Design and dimensions are subject to modification. Prices do not include applicable taxes. Visit **www.mifab.com** for the most recent product information.
MIFAB®, Inc., 1321 West 119th Street, Chicago, Illinois 60643-5109, USA Toll Free: 1-800-465-2736 • Fax: 1-773-341-3049
All sales subject to MIFAB’s® Terms & Warranties. Please refer to inside front cover. sales@mifab.com • Canada Toll Free: 1-800-387-3880

R1900 VERTICAL EXPANSION JOINT

R1900

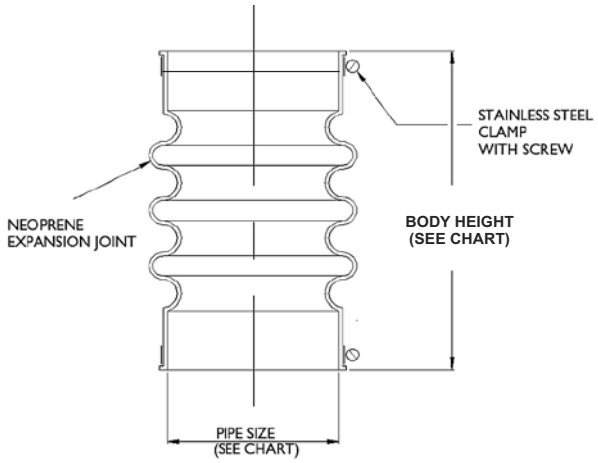

EFFECTIVE TEMPERATURE RANGE IS 20 DEGREES F TO 120 DEGREES F.

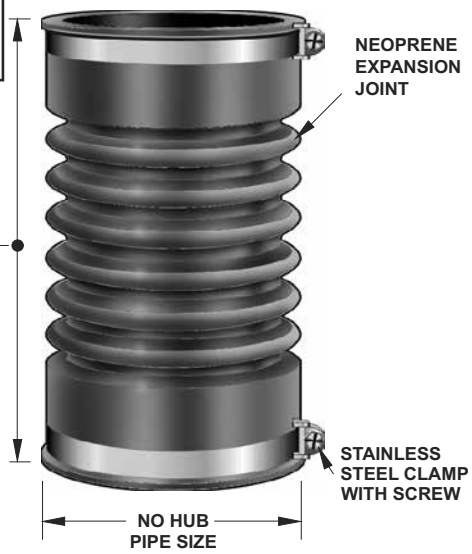

VERTICAL EXPANSION JOINT			
MODEL NO.	WT Lbs.	NO HUB CONNECTION SIZE	LIST PRICE
R1902	2.00	2”	$ 910.00
R1903	2.50	3”	$ 970.00
R1904	3.00	4”	$ 1098.00
R1906	5.00	6”	$ 1828.00
R1908	7.00	8”	$ 3225.00

PIPE	
SIZE	HEIGHT
2”	7 1/8”
3”	8 1/8”
4”	8 5/8”
6”	8 5/8”
8”	11”

2", 3" and 4" models work with PVC and / or cast iron pipe. 6" and 8" models work with PVC pipe only.

FOR EACH MODEL, THE COMPRESSION IS 1", EXPANSION IS 1/2" AND ROTATION IS 10 DEGREES.

R1930 VANDAL PROOF CAST IRON VENT CAP

R1930

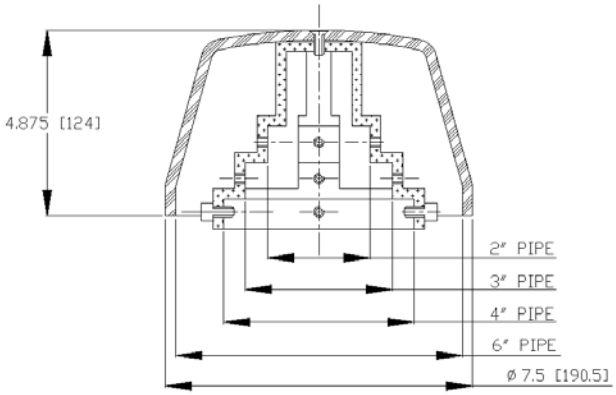

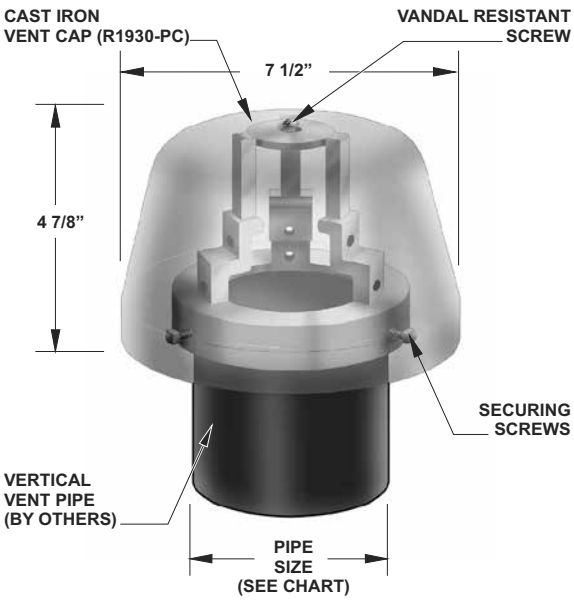

LACQUERED CAST IRON BODY WITH:			
MODEL NO.	WT Lbs.	OUTLET SIZE	LIST PRICE
R1932	10.00	2”	$ 575.00
R1933	10.00	3”	$ 651.00
R1934	10.00	4”	$ 726.00
R1936	7.00	6”	$ 929.00

NOTE: Universal body assembly fits over 2”, 3” or 4” vertical vent pipe. One size serves all applications.

For 6” vertical vent pipe, discard internal “step” piece and use the three securing screws to assemble the cast iron vent cap to the top of 6” vent pipe.

R1930 OPTIONAL VARIATIONS:		
SUFFIX	DESCRIPTION	LIST PRICE
-13	All galvanized	$ 224.00

ROOF DRAINS

R1940 DOWNSPOUT NOZZLE

OVERALL LENGTH	
SIZE	LENGTH
2”	2 3/8”
3”	3 5/8”
4”	3 1/2”
6”	4 3/8”
8”	5”
10”	5”
12”	7”

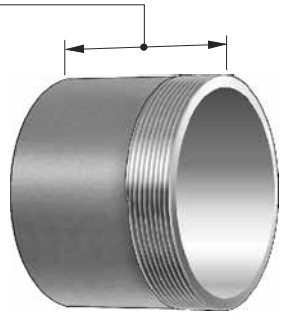

NOTE: For no hub connection, use MI-850 no hub to male threaded adapter

MI-850		
MODEL NO.	SIZE NPT X NO HUB	LIST PRICE
MI-850-2	2”	$ 143.00
MI-850-3	3”	$ 204.00
MI-850-4	4”	$ 317.00
MI-850-6	6”	$ 963.00
MI-850-8	8”	$ 1069.00
MI-850-10	10”	$ 1274.00
MI-850-12	12”	$ 1596.00

(Optional 16 gauge removable steel rodent screen, Suffix -83)

ANCHOR FLANGE PARTS (-1=NB, -3=SS)	
R1942-PC-1,3 (FOR R1942-1, R1942-3)	$ 453.00
R1943-PC-1,3 (FOR R1943-1, R1943-3)	$ 453.00
R1944-PC-1,3 (FOR R1944-1, R1944-3)	$ 453.00
R1946-PC-1,3 (FOR R1946-1, R1946-3)	$ 856.00
R1948-PC-1 (FOR R1948-1)	$ 1140.00
R1950-PC-1 (FOR R1950-1)	$ 1520.00
R1952-PC-1 (FOR R1952-1)	$ 1991.00

Note: For 5" anchor flange, use R1946-PC-SJ-1,3

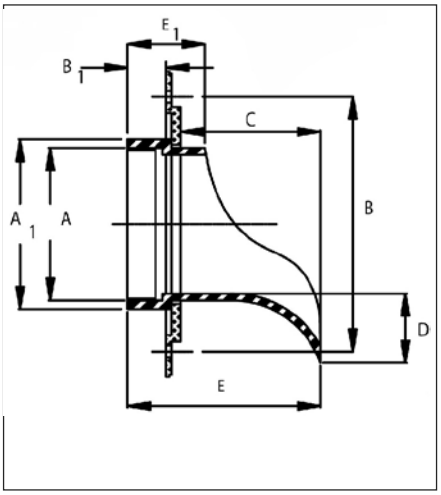

MODEL NO.	A, THREAD SIZE (NPS)	A1	B	B1	C	D	E	E1
R1942	2”	3.9”	6.40”	1.0”	4.5”	2.0”	5.75”	2.1”
R1943	3”	3.9”	6.40”	1.0”	4.5”	2.0”	5.75”	2.1”
R1944	4”	4.9”	7.40”	1.15”	4.0”	2.0”	5.50”	2.1”
R1945	5”	7.1”	9.40”	1.15”	4.5”	2.5”	5.75”	2.1”
R1946	6”	7.1”	9.40”	1.15”	4.5”	2.5”	5.75”	2.1”
R1948	8”	9.1”	11.40”	1.15”	4.5”	2.5”	5.75”	2.65”
R1950	10”	11.2”	13.40”	1.35”	4.5”	2.5”	5.75”	2.65”
R1952	12”	13.13”	14.63”	1.35”	4.5”	2.5”	6.56”	2.65”

MODEL NO.	WT Lbs.	THREADED OUTLET SIZE	ROUGH BRONZE (-2RB)	NICKEL BRONZE (-1) OR STAINLESS STEEL (-3)
R1942,3,4	4.00	2”,3”,4”	$ 822.00	$ 1405.00
R1945,6	7.00	5”, 6”	$ 1943.00	$ 2522.00
R1948	10.00	8 ”	$ 2940.00	$ 3449.00 (-1 ONLY)
R1950	14.00	10”	$ 3817.00	$ 4506.00 (-1 ONLY)
R1952	19.00	12”	$ 4801.00	$ 5574.00 (-1 ONLY)

R1940 OPTIONAL VARIATIONS:		
SUFFIX	DESCRIPTION	LIST PRICE
-83	16 gauge removable steel rodent screen	$ 720.00
-84	Hinged,16 gauge removable rodent screen	$ 971.00

Note: The R1942 model in all finishes is available only as the R1943 model with the MI-800-2 (3" x 2") eccentric reducer bushing (See page 288).

Design and dimensions are subject to modification. Prices do not include applicable taxes. Visit **www.mifab.com** for the most recent product information.
MIFAB®, Inc., 1321 West 119th Street, Chicago, Illinois 60643-5109, USA
Toll Free: 1-800-465-2736 • Fax: 1-773-341-3049
All sales subject to MIFAB's® Terms & Warranties. Please refer to inside front cover.
sales@mifab.com • Canada Toll Free: 1-800-387-3880

R1940-SJ DOWNSPOUT NOZZLE WITH SLIP JOINT INLET R1940-SJ

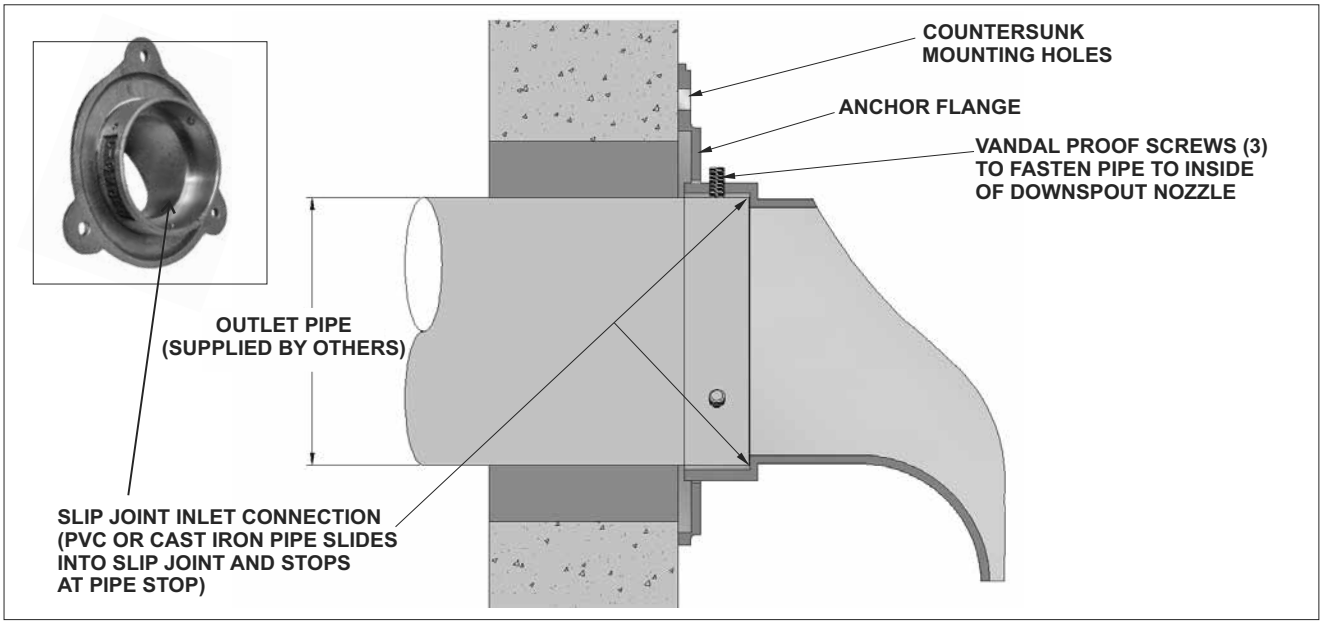

The (slip joint inlet downspout nozzle) performs the same function as the R1940 downspout nozzle. The difference between the two is the method of connecting the pipe to the inlet. With the R1940-SJ, the inlet is machined out. This allows cast iron or PVC pipe to extend past the face of the finished wall and rest against the pipe stop. The pipe is secured to the inside of the R1940-SJ via three vandal proof screws.

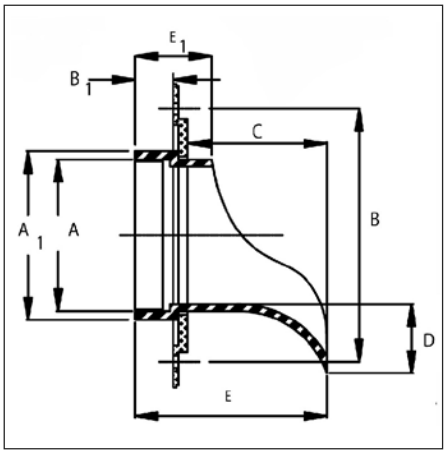

ANCHOR FLANGE PARTS (-1=NB, -3=SS)	
R1942-PC (FOR R1942-SJ-1, R1942-SJ-3)	$ 453.00
R1943-PC-SJ-1,3 (FOR R1943-SJ-1, R1943-SJ-3)	$ 453.00
R1944-PC-SJ-1,3 (FOR R1944-SJ-1, R1944-SJ-3)	$ 453.00
R1946-PC-SJ-1,3 (FOR R1946-SJ-1, R1946-SJ-3)	$ 856.00
R1948-PC-SJ-1 (FOR R1948-SJ-1)	$ 1140.00
R1950-PC-SJ-1 (FOR R1950-SJ-1)	$ 1520.00
R1952-PC-SJ-1 (FOR R1952-SJ-1)	$ 1991.00

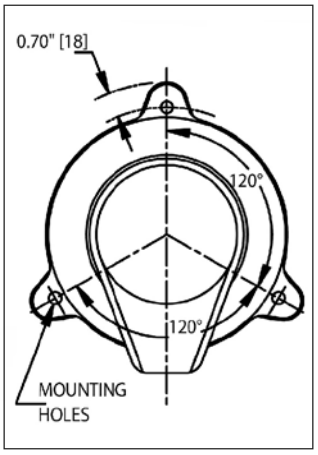

MODEL NO.	SLIP JOINT PIPE SIZE	A1	B	B1	C	D	E	E1
R1942-SJ	2”	3.9”	6.40”	1.0”	4.5”	2.0”	5.75”	2.1”
R1943-SJ	3”	3.9”	6.40”	1.0”	4.5”	2.0”	5.75”	2.1”
R1944-SJ	4”	4.9”	7.40”	1.15”	4.0”	2.0”	5.50”	2.1”
R1946-SJ	6”	7.1”	9.40”	1.15”	4.5”	2.5”	5.75”	2.1”
R1948-SJ	8”	9.1”	11.40”	1.15”	4.5”	2.5”	5.75”	2.65”
R1950-SJ	10”	11.2”	13.40”	1.35”	4.5”	2.5”	5.75”	2.65”
R1952-SJ	12”	13.13”	14.63”	1.35”	4.5”	2.5”	6.56”	2.65”

MODEL NO.	WT Lbs.	SLIP JOINT OUTLET SIZE	ROUGH BRONZE (-2RB)	NICKEL BRONZE (-1) OR STAINLESS STEEL (-3)
R1942,3,4-SJ	4.00	2”,3”,4”	$ 822.00	$ 1405.00
R1946-SJ	7.00	6”	$ 1943.00	$ 2522.00
R1948-SJ	10.00	8 ”	$ 2940.00	$ 3449.00 (-1 ONLY)
R1950-SJ	14.00	10”	N/A	$ 4506.00 (-1 ONLY)
R1952-SJ	19.00	12”	N/A	$ 5574.00 (-1 ONLY)

R1940-SJ OPTIONAL VARIATIONS:		
SUFFIX	DESCRIPTION	LIST PRICE
-83	16 gauge removable steel rodent screen	$ 720.00
-84	Hinged,16 gauge removable rodent screen	$ 971.00

Note: The R1942 model in all finishes is available only as the R1943 model with the MI-800-2 (3" x 2") eccentric reducer bushing (See page 288).

ROOF DRAINS

R1960-F FABRICATED STAINLESS STEEL DOWNSPOUT WITH HINGED COVER R1960

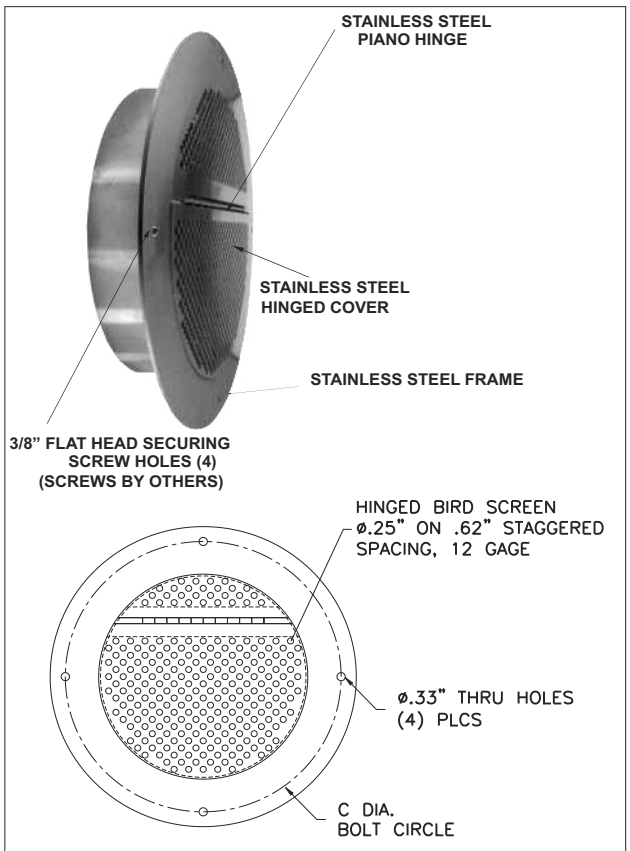

R1960-F Illustrated

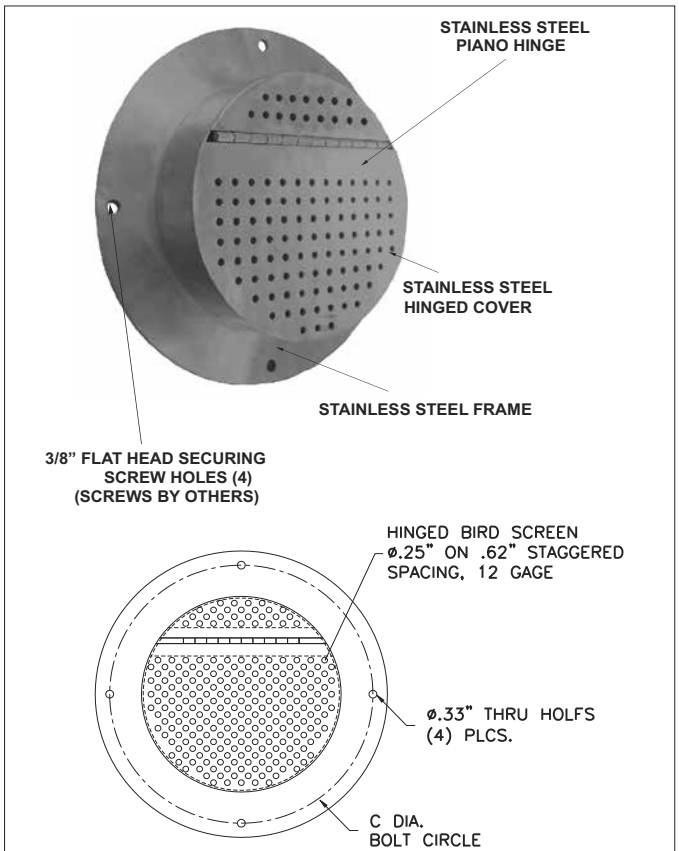

R1960 Illustrated

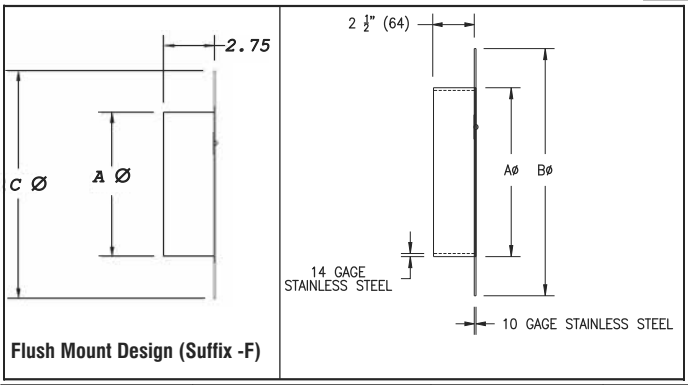

Flush Mount Design (Suffix -F)

Note: The R1960 and R1960-F models are made to receive PVC, ABS or cast iron pipe inside the "A" dimension. The R1960 models "sleeve" over the pipe sticking out from the wall. The R1960-F models "sleeve" over the pipe that is flush to the wall.

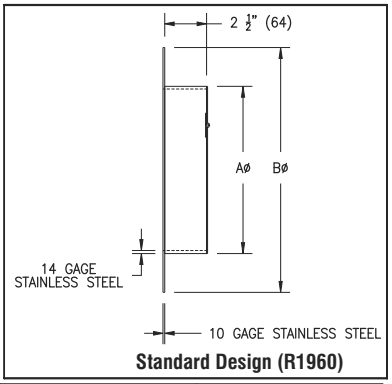

Standard Design (R1960)

MODEL NO.	PIPE SIZE	A	B	C	Free Area (Square Inches)	LIST PRICE
R1963	3"	4 1/4"	7 3/4"	6"	1	$ 3784.00
R1964	4"	5 1/4"	8 3/4"	7 1/8"	2	$ 3784.00
R1966	6"	7 3/8"	10 7/8"	9"	6	$ 3991.00
R1968	8"	9 3/8"	12 7/8"	11 1/4"	10	$ 4188.00
R1960-10	10"	11 1/2"	15"	13 1/2"	18	$ 4432.00
R1960-12	12"	13 1/2"	17"	15 1/2"	26	$ 4696.00
R1960-15	15"	16 5/8"	20 1/8"	18 1/2"	40	$ 4965.00

R1960 OPTIONAL VARIATIONS:

SUFFIX	DESCRIPTION	LIST PRICE
-6	Vandal proof secured top	$ 196.00
-49	Chrome plated	$ 670.00
-85	Stainless Steel Mesh Screen	$ 655.00
-F	Flush mount design	No Add
-NH	No hub outlet	No Add

CAD details illustrating -NH No Hub outlet

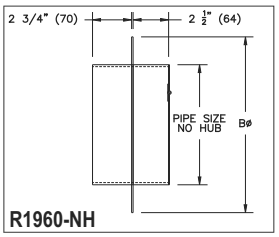

R1960-NH

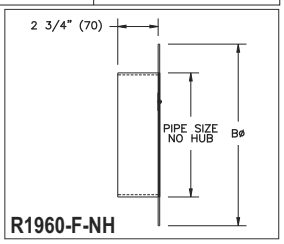

R1960-F-NH

Design and dimensions are subject to modification. Prices do not include applicable taxes. Visit **www.mifab.com** for the most recent product information.
MIFAB®, Inc., 1321 West 119th Street, Chicago, Illinois 60643-5109, USA Toll Free: 1-800-465-2736 • Fax: 1-773-341-3049
All sales subject to MIFAB's® Terms & Warranties. Please refer to inside front cover. sales@mifab.com • Canada Toll Free: 1-800-387-3880

R1100-28-G8H GREEN ROOF DRAIN WITH PERFORATED S.S. BALLAST GUARD AND REMOVABLE COVER WITH LIFT HANDLE R1100-28-G8H

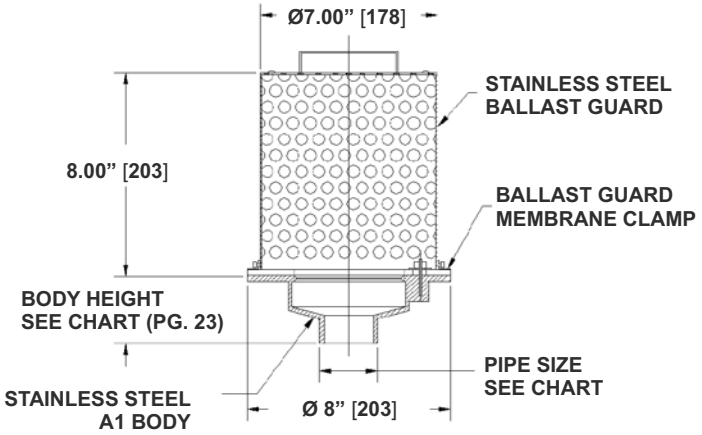

Description: MIFAB R1100-28-G8H green roof drain with 8" diameter, cast stainless steel A1 body with 2", 3" or 4" no hub bottom outlet connection, stainless steel membrane clamp, 8" high secured stainless steel ballast guard and removable perforated lid with lift handle.

MODEL NO.	PIPE SIZE	LIST PRICE
R1102-28-G8H	2"	$ 5174.00
R1103-28-G8H	3"	$ 5174.00
R1104-28-G8H	4"	$ 5174.00

R1100-28-G8H OPTIONAL VARIATIONS		
SUFFIX	DESCRIPTION	LIST PRICE
-6	Vandal proof secured top	$ 164.00
-44	2" no hub auxiliary inlet (on ballast guard	$ 278.00
-45	3" no hub auxiliary inlet (on ballast guard)	$ 278.00
-46	4" no hub auxiliary inlet (on ballast	$ 278.00
guard) -G(*)H	(*) indicates total custom height of ballast	$ 278.00 per 1" over 8"

R1100-28-G8H-AI GREEN ROOF DRAIN WITH PERFORATED S.S. BALLAST GUARD, AUXILIARY INLET AND REMOVABLE COVER R1100-28-G8H-AI

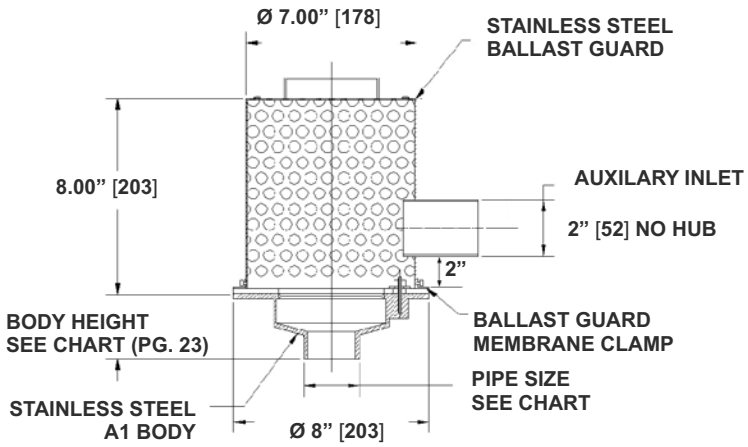

Description: MIFAB R1100-28-G8H-AI green roof drain with 8" diameter, cast stainless steel A1 body with 2", 3" or 4" no hub bottom outlet connection, stainless steel membrane clamp, 8" high stainless steel secured ballast guard with auxiliary inlet and removable perforated lid with lift handle.

MODEL NO.	PIPE SIZE	LIST PRICE
R1102-28-G8H-AI	2"	$ 5452.00
R1103-28-G8H-AI	3"	$ 5452.00
R1104-28-G8H-AI	4"	$ 5452.00

R1100-28-G8H-AI OPTIONAL VARIATIONS		
SUFFIX	DESCRIPTION	LIST PRICE
-6	Vandal proof secured top	$ 164.00
-44	2" no hub auxiliary inlet (on ballast guard)	$ 278.00
-45	3" no hub auxiliary inlet (on ballast guard)	$ 278.00
-46	4" no hub auxiliary inlet (on ballast guard)	$ 278.00
-G(*)H	(*) indicates total custom height of ballast guard required.	$ 278.00 per 1" over 8"

R1200-JD-M-G5H LARGE GREEN ROOF DRAIN WITH PERFORATED S.S. 5" HIGH BALLAST GUARD AND REMOVABLE COVER WITH LIFT HANDLE

R1200-JD-M-G5H

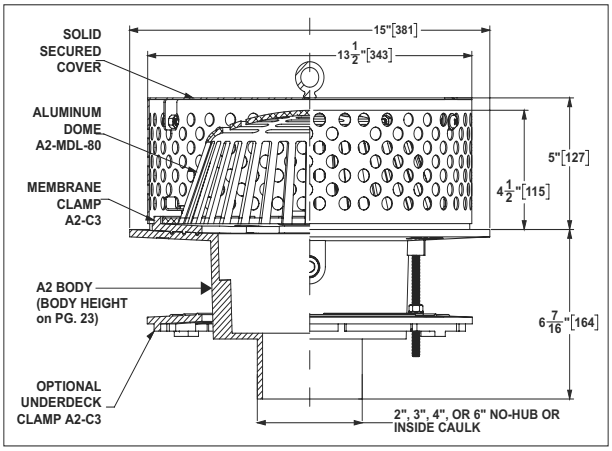

Description: MIFAB R1200-JD-M-G5H large green roof drain with 15" diameter, lacquered cast iron A2 body with combination membrane clamp and gravel guard with cast iron dome and 5" high perforated stainless steel ballast guard with secured removable access cover and lift handle.

MODEL NO.	PIPE SIZE	LIST PRICE
R1202,3,4-JD-M-G5H	2", 3", 4"	$ 6469.00
R1205,6-JD-M-G5H	5", 6"	$ 6872.00
R1208-JD-M-G5H	8"	$ 7264.00

R1200-JD-M-G5H OPTIONAL VARIATIONS

SUFFIX	DESCRIPTION	LIST PRICE
-6	Vandal proof (Metal dome only) (H-1029)	$ 164.00
-11	Acid resistant epoxy coated body, membrane clamp & dome	$ 1764.00
-12	Galvanized metal dome	$ 477.00
-12A	Galvanized body and membrane clamp	$ 1246.00
-12B	Galvanized metal dome and membrane clamp	$ 864.00
-13	Galvanized body, membrane clamp and dome	$ 1770.00
-28	Stainless steel body (Type 304)	$ 4702.00
-83	Stainless steel mesh screen over dome (A2-MD-83)	$ 655.00
-B	Sump receiver (A2-BP)	$ 356.00
-C	Secondary clamp (A2-C3)	$ 319.00
-E	Adjustable extension	$ 943.00
-EG	Galvanized adjustable extension	$ 1397.00
-G(*)H	(*) indicates total custom height of ballast guard required.	$ 355.00 per 1" over 5"
P	Push on outlet (2", 3", 4", 5" or 6")	No Add
-R	2" external water dam (A2-WD)	$ 306.00
T	Threaded outlet (2", 3", 4", 5" or 6")	$ 107.00
-U	Underdeck clamp (A2-C3)	$ 319.00
-V	Fixed extension, (2",3",4") (A2-V2, A2-V3, A2-V4)	$ 860.00
-VG	Galvanized fixed extension, (2",3",4")	$ 1295.00
-W	Adjustable water dam (5" high x 4"diameter) (W-31)	$ 1150.00
-W-1	Water proofing flange (A2-W-1)	$ 578.00
-W2	2" internal water dam (2" high x 4" diameter) (A2-C3-W and W-31)	$ 547.00
-W3	3" internal water dam (3" high x 4" diameter) (A2-C3-W and W-31)	$ 547.00
-W4	4" internal water dam (4" high x 4" diameter) (A2-C3-W and W-31)	$ 547.00
X	Inside caulk outlet, (2", 3", 4", 5" or 6")	No Add
-Z	Extended wide flange on body (20" Dia. x 1/4 thick)	$ 1724.00

R1200-JD-M-G8H-AI LARGE GREEN ROOF DRAIN WITH PERFORATED S.S. 8" HIGH BALLAST GUARD AND REMOVABLE COVER WITH LIFT HANDLE

R1200-JD-M-G8H-AI

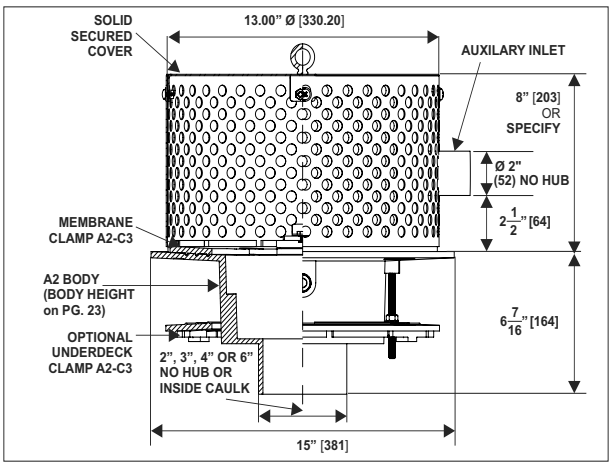

Description: MIFAB R1200-JD-M-G8H-AI large green roof drain with 15" diameter, lacquered cast iron A2 body with combination membrane clamp and gravel guard with 8" high perforated stainless steel ballast guard with 2" auxiliary no hub inlet and secured removable access cover with lift handle.

MODEL NO.	PIPE SIZE	LIST PRICE
R1202,3,4-JD-M-G8H-AI	2", 3", 4"	$ 6745.00
R1205,6-JD-M-G8H-AI	5", 6"	$ 7147.00
R1208-JD-M-G8H-AI	8"	$ 7541.00

R1200-JD-M-G8H-AI OPTIONAL VARIATIONS

SUFFIX	DESCRIPTION	LIST PRICE
-11	Acid resistant epoxy coated body, membrane clamp & dome	$ 1764.00
-12A	Galvanized body and membrane clamp	$ 1246.00
-13	Galvanized body, membrane clamp and dome	$ 1770.00
-28	Stainless steel body (Type 304)	$ 4702.00
-45	3" no hub auxiliary inlet (on ballast guard)	$ 278.00
-46	4" no hub auxiliary inlet (on ballast guard)	$ 278.00
-B	Sump receiver (A2-BP)	$ 356.00
-C	Secondary clamp (A2-C3)	$ 319.00
-E	Adjustable extension	$ 943.00
-EG	Galvanized adjustable extension	$ 1397.00
-G(*)H	(*) indicates total custom height of ballast guard required	$ 355.00 per 1" over 5"
P	Push on outlet (2", 3", 4", 5" or 6")	No Add
-R	2" external water dam (A2-WD)	$ 306.00
T	Threaded outlet (2", 3", 4", 5" or 6")	$ 107.00
-V	Fixed extension, (2",3",4") (A2-V2, A2-V3, A2-V4)	$ 860.00
-VG	Galvanized fixed extension, (2",3",4")	$ 1295.00
-W	Adjustable water dam (5" high x 4"diameter) (W-31)	$ 1150.00
-W-1	Water proofing flange (A2-W-1)	$ 578.00
-W2	2" internal water dam (2" high x 4" diameter) (A2-C3-W and W-31)	$ 547.00
-W3	3" internal water dam (3" high x 4" diameter) (A2-C3-W and W-31)	$ 547.00
-W4	4" internal water dam (4" high x 4" diameter) (A2-C3-W and W-31)	$ 547.00
X	Inside caulk outlet, (2", 3", 4", 5" or 6")	No Add
-Z	Extended wide flange on body (20" Dia. x 1/4 thick)	$ 1724.00

Design and dimensions are subject to modification. Prices do not include applicable taxes. Visit **www.mifab.com** for the most recent product information.
MIFAB®, Inc., 1321 West 119th Street, Chicago, Illinois 60643-5109, USA Toll Free: 1-800-465-2736 • Fax: 1-773-341-3049
All sales subject to MIFAB's® Terms & Warranties. Please refer to inside front cover. sales@mifab.com • Canada Toll Free: 1-800-387-3880

R1200-JD-M-G5H-W31H4 LARGE GREEN ROOF DRAIN WITH R1200-JD-M-G5H-W31H4 PERFORATED S.S. 5" HIGH BALLAST GUARD, ABS STANDPIPE AND REMOVABLE COVER WITH LIFT HANDLE

R1200-JD-M-G5H-W31H4 OPTIONAL VARIATIONS:

SUFFIX	DESCRIPTION	LIST PRICE
-6	Vandal proof (Metal dome only) (H-1029)	$ 164.00
-11	Acid resistant epoxy coated body, membrane clamp & dome	$ 1764.00
-12	Galvanized metal dome	$ 477.00
-12A	Galvanized body and membrane clamp	$ 1246.00
-12B	Galvanized metal dome and membrane clamp	$ 864.00
-13	Galvanized body, membrane clamp and dome	$ 1770.00
-28	Stainless steel body (Type 304)	$ 4702.00
-83	Stainless steel mesh screen over dome (A2-MD-83)	$ 655.00
-B	Sump receiver (A2-BP)	$ 356.00
-C	Secondary clamp (A2-C3)	$ 319.00
-E	Adjustable extension	$ 943.00
-EG	Galvanized adjustable extension	$ 1397.00
-G(*)H	(*) indicates total custom height of ballast guard required.	$ 334.00 per 1" over 5"
P	Push on outlet (2", 3", 4", 5" or 6")	No Add
-P(*)L	(*) indicates total custom length of PVC standpipe required.	$ 148.00 per 1" over 5"
-R	2" external water dam (A2-WD)	$ 306.00
T	Threaded outlet (2", 3", 4", 5" or 6")	$ 107.00
-U	Underdeck clamp (A2-C3)	$ 319.00
-V	Fixed extension, (2",3",4") (A2-V2, A2-V3, A2-V4)	$ 860.00
-VG	Galvanized fixed extension, (2",3",4")	$ 1295.00
-W-1	Water proofing flange (A2-W-1)	$ 578.00
-W-2	2" internal water dam (2" high x 4" diameter) (A2-C3-W + W-31)	$ 547.00
-W-3	3" internal water dam (3" high x 4" diameter) (A2-C3-W + W-31)	$ 547.00
X	Inside caulk outlet, (2", 3", 4", 5" or 6")	No Add
-Z	Extended wide flange on body (20" Dia. x 1/4 thick)	$ 1724.00

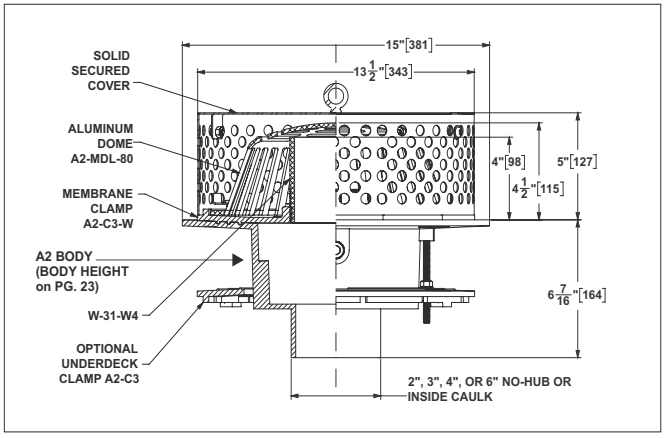

Description: MIFAB R1200-JD-M-G5H-W31H4 large green roof drain with 15" diameter, lacquered cast iron A2 body with combination membrane clamp and gravel guard with cast iron dome, ABS standpipe, 5" high perforated stainless steel ballast guard with secured removable access cover and lift handle.

MODEL NO.	PIPE SIZE	LIST PRICE
R1202,3,4-JD-M-G5H-W31H4	2", 3", 4"	$ 7626.00
R1205,6-JD-M-G5H-W31H4	5", 6"	$ 8026.00
R1208-JD-M-G5H-W31H4	8"	$ 8419.00

R1200-JD-W31P6L-W4 LARGE GREEN ROOF DRAIN WITH R1200-JD-W31P6L-WD PERFORATED PVC STANDPIPE AND STAINLESS STEEL MESH COVERED CAST IRON DOME

R1200-JD-W31P6L-WD OPTIONAL VARIATIONS:

SUFFIX	DESCRIPTION	LIST PRICE
-3	Perforated Stainless Steel standpipe (Type 304) - 6"	$ 939.00 (Add $89.00 per 1" over 6")
-6	Vandal proof (Metal dome only) (H-1029)	$ 164.00
-11	Acid resistant epoxy coated body, membrane clamp & dome	$ 1764.00
-12	Galvanized metal dome	$ 477.00
-12A	Galvanized body and membrane clamp	$ 1246.00
-12B	Galvanized metal dome and membrane clamp	$ 864.00
-13	Galvanized body, membrane clamp and dome	$ 1770.00
-28	Stainless steel body (Type 304)	$ 4702.00
-84	Stainless Steel mesh screen around standpipe	$ 625.00 (Add $63.00 per 1" over 6")
-B	Sump receiver (A2-BP)	$ 356.00
-C	Secondary clamp (A2-C3)	$ 319.00
-E	Adjustable extension	$ 943.00
-EG	Galvanized adjustable extension	$ 1397.00
P	Push on outlet (2", 3", 4", 5" or 6")	No Add
-P(*)L	(*) indicates total custom length of PVC standpipe required.	$ 148.00 per 1" over 6"
T	Threaded outlet (2", 3", 4", 5" or 6")	$ 107.00
-U	Underdeck clamp (A2-C3)	$ 319.00
-V	Fixed extension, (2",3",4") (A2-V2, A2-V3, A2-V4)	$ 860.00
-VG	Galvanized fixed extension, (2",3",4")	$ 1295.00
-W-1	Water proofing flange (A2-W-1)	$ 578.00
-W-2	2" internal water dam (2" high x 4" diameter) (A2-C3-W + W-31)	$ 547.00
-W-3	3" internal water dam (3" high x 4" diameter) (A2-C3-W + W-31)	$ 547.00
X	Inside caulk outlet, (2", 3", 4", 5" or 6")	No Add
-Z	Extended wide flange on body (20" Dia. x 1/4 thick)	$ 1724.00

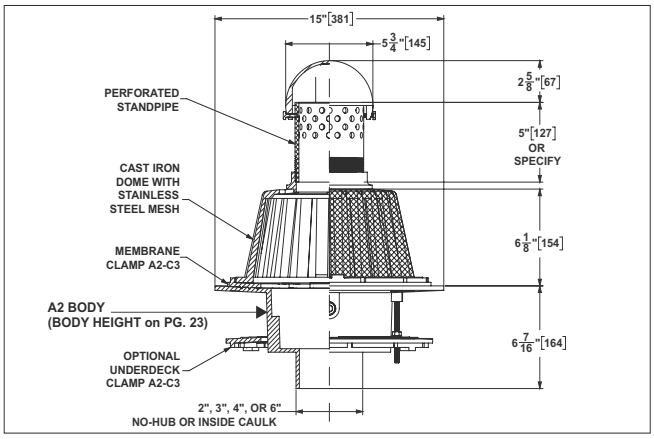

Description: MIFAB R1200-JD-W31P6L-WD large green roof drain with 15" diameter, lacquered cast iron A2 body with combination membrane clamp and gravel guard with cast iron, stainless steel mesh covered dome and 6" high perforated PVC standpipe.

MODEL NO.	PIPE SIZE	LIST PRICE
R1202,3,4-JD-W31P6L-W4	2", 3", 4"	$ 8278.00
R1205,6-JD-W31P6L-W4	5", 6"	$ 8626.00
R1208-JD-W31P6L-W4	8"	$ 9022.00

R1200-JD-W31P24L-R1404T-1-83 LARGE GREEN ROOF DRAIN WITH PERFORATED R1200-JD-W31P24L-R1404T-1-83

PERFORATED PVC STANDPIPE, STAINLESS STEEL MESH COVERED CAST IRON DOME AND TOP N.B. DOME STRAINER

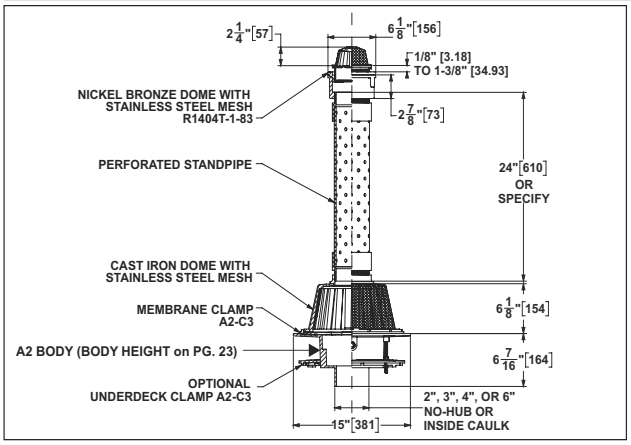

Description: MIFAB R1200-JD-W31P24L-R1404T-1-83 large green roof drain with 15" diameter, lacquered cast iron A2 body with combination membrane clamp and gravel guard with cast iron, stainless steel mesh covered dome and 24" high perforated PVC standpipe with cast iron body and nickel bronze strainer with stainless steel mesh dome on top.

MODEL NO.	PIPE SIZE	LIST PRICE
R1202,3,4-JD-W31P24L-R1404T-1-83	2", 3", 4"	$ 8734.00
R1205,6-JD-W31P24L-R1404T-1-83	5", 6"	$ 10,474.00
R1208-JD-W31P24L-R1404T-1-83	8"	$ 10,870.00

R1200-JD-W31P24L-R1404T-1-83 OPTIONAL VARIATIONS:

SUFFIX	DESCRIPTION	LIST PRICE
-3	Perforated Stainless Steel standpipe (Type 304) - 24"	$ 3751.00 (Add $375.00 per 1" over 24")
-6	Vandal proof (Metal dome only) (H-1029)	$ 164.00
-11	Acid resistant epoxy coated body, membrane clamp & dome	$ 1764.00
-12	Galvanized metal dome	$ 477.00
-12A	Galvanized body and membrane clamp	$ 1246.00
-12B	Galvanized metal dome and membrane clamp	$ 864.00
-13	Galvanized body, membrane clamp and dome	$ 1770.00
-28	Stainless steel body (Type 304)	$ 4702.00
-84	Stainless Steel mesh screen around standpipe	$ 2500.00 (Add $62.00 per 1" over 24")
-B	Sump receiver (A2-BP)	$ 356.00
-C	Secondary clamp (A2-C3)	$ 319.00
-E	Adjustable extension	$ 943.00
-EG	Galvanized adjustable extension	$ 1397.00
-G	Ballast guard (A2-BG)	$ 1022.00
P	Push on outlet (2", 3", 4", 5" or 6")	No Add
-P(*)L	(*) indicates total custom length of PVC standpipe required.	$ 148.00 per 1" over 24"
T	Threaded outlet (2", 3", 4", 5" or 6")	$ 107.00
-U	Underdeck clamp (A2-C3)	$ 319.00
-V	Fixed extension, (2",3",4") (A2-V2, A2-V3, A2-V4)	$ 860.00
-VG	Galvanized fixed extension, (2",3",4")	$ 1295.00
-W-1	Water proofing flange (A2-W-1)	$ 578.00
X	Inside caulk outlet, (2", 3", 4", 5" or 6")	No Add
-Z	Extended wide flange on body (20" Dia. x 1/4 thick)	$ 1724.00

R1200-JD-W31P24L-R1104 LARGE GREEN ROOF DRAIN WITH PERFORATED R1200-JD-W31P24L-R1104

PVC STANDPIPE, STAINLESS STEEL MESH COVERED CAST IRON DOME AND TOP POLY DOME STRAINER

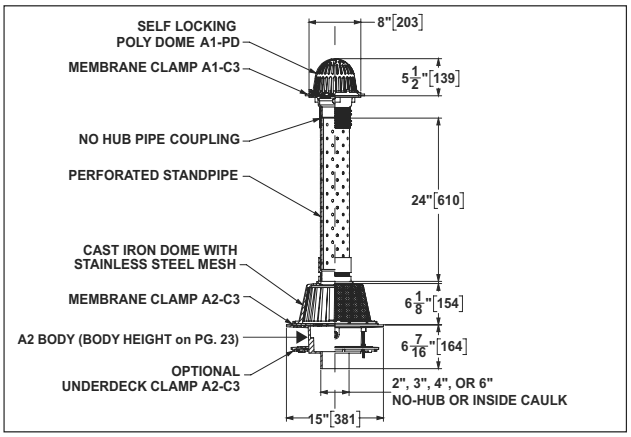

Description: MIFAB R1200-JD-W31P24L-R1104 large green roof drain with 15" diameter, lacquered cast iron A2 body with combination membrane clamp and gravel guard with cast iron, stainless steel mesh covered dome and 24" high perforated PVC standpipe with cast iron body and poly dome strainer on top.

MODEL NO.	PIPE SIZE	LIST PRICE
R1202,3,4-JD-W31P24L-R1104	2", 3", 4"	$ 9945.00
R1205,6-JD-W31P24L-R1104	5", 6"	$ 10,290.00
R1208-JD-W31P24L-R1104	8"	$ 10,684.00

R1200-JD-W31P24L-R1104 OPTIONAL VARIATIONS:

SUFFIX	DESCRIPTION	LIST PRICE
-3	Perforated Stainless Steel standpipe (Type 304) - 24"	$ 3751.00 (Add $375.00 per 1" over 24")
-6	Vandal proof (Metal dome only) (H-1029)	$ 164.00
-11	Acid resistant epoxy coated body, membrane clamp & dome	$ 1764.00
-12	Galvanized metal dome	$ 477.00
-12A	Galvanized body and membrane clamp	$ 1246.00
-12B	Galvanized metal dome and membrane clamp	$ 864.00
-13	Galvanized body, membrane clamp and dome	$ 1770.00
-28	Stainless steel body (Type 304)	$ 4702.00
-81	Rough bronze dome (A1-MD-81)	$ 434.00
-83	Stainless Steel mesh screen over dome (A1-SSD)	$ 459.00
-84	Stainless Steel mesh screen around standpipe	$ 2500.00 (Add $62.00 per 1" over 24")
-B	Sump receiver (A2-BP)	$ 356.00
-C	Secondary clamp (A2-C3)	$ 319.00
-E	Adjustable extension	$ 943.00
-EG	Galvanized adjustable extension	$ 1397.00
-G	Ballast guard (A2-BG)	$ 1022.00
P	Push on outlet (2", 3", 4", 5" or 6")	No Add
-P(*)L	(*) indicates total custom length of PVC standpipe required.	$ 148.00 per 1" over 24"
T	Threaded outlet (2", 3", 4", 5" or 6")	$ 107.00
-U	Underdeck clamp (A2-C3)	$ 319.00
-V	Fixed extension, (2",3",4") (A2-V2, A2-V3, A2-V4)	$ 860.00
-VG	Galvanized fixed extension, (2",3",4")	$ 1295.00
-W-1	Water proofing flange (A2-W-1)	$ 578.00
X	Inside caulk outlet, (2", 3", 4", 5" or 6")	No Add
-Z	Extended wide flange on body (20" Dia. x 1/4 thick)	$ 1724.00

R1200-JD-W31P24L-R1204-JD LARGE GREEN ROOF DRAIN WITH PERFORATED PVC STANDPIPE, STAINLESS STEEL MESH COVERED CAST IRON DOME AND TOP CAST IRON DOME STRAINER WITH MESH

R1200-JD-W31P24L-R1204-JD OPTIONAL VARIATIONS:

SUFFIX	DESCRIPTION	LIST PRICE
-3	Perforated Stainless Steel standpipe (Type 304) - 24" (Add **$375.00** per 1" over 24")	$ 3751.00
-6	Vandal proof (Metal dome only) (H-1029)	$ 164.00
-11	Acid resistant epoxy coated body, membrane clamp & dome	$ 1764.00
-12	Galvanized metal dome	$ 477.00
-12A	Galvanized body and membrane clamp	$ 1246.00
-12B	Galvanized metal dome and membrane clamp	$ 864.00
-13	Galvanized body, membrane clamp and dome	$ 1770.00
-28	Stainless steel body (Type 304)	$ 4702.00
-84	Stainless Steel mesh screen around standpipe (Add **$62.00** per 1" over 24")	$ 2500.00
-B	Sump receiver (A2-BP)	$ 356.00
-C	Secondary clamp (A2-C3)	$ 319.00
-E	Adjustable extension	$ 943.00
-EG	Galvanized adjustable extension	$ 1397.00
-G	Ballast guard (A2-BG)	$ 1022.00
P	Push on outlet (2", 3", 4", 5" or 6")	No Add
-P(*)L	(*) indicates total custom length of PVC standpipe required.	$ 148.00 per 1" over 24"
T	Threaded outlet (2", 3", 4", 5" or 6")	$ 107.00
-U	Underdeck clamp (A2-C3)	$ 319.00
-V	Fixed extension, (2",3",4") (A2-V2, A2-V3, A2-V4)	$ 860.00
-VG	Galvanized fixed extension, (2",3",4")	$ 1295.00
-W-1	Water proofing flange (A2-W-1)	$ 578.00
X	Inside caulk outlet, (2", 3", 4", 5" or 6")	No Add
-Z	Extended wide flange on body (20" Dia. x 1/4 thick)	$ 1724.00

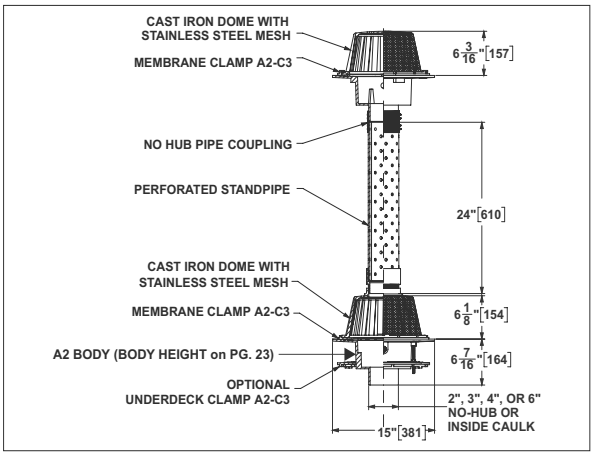

Description: MIFAB R1200-JD-W31P24L-R1204-JD large green roof drain with 15" diameter, lacquered cast iron A2 body with combination membrane clamp and gravel guard with cast iron, stainless steel mesh covered dome and 24" high perforated PVC standpipe with cast iron body with stainless steel mesh dome on top.

MODEL NO.	PIPE SIZE	LIST PRICE
R1202,3,4-JD-W31P24L-R1204-JD	2", 3", 4"	$ 10,498.00
R1205,6-JD-W31P24L-R1204-JD	5", 6"	$ 10,845.00
R1208-JD-W31P24L-R1204-JD	8"	$ 11,237.00

R1200-JD-W31P24L-F1444 LARGE GREEN PROMENADE ROOF DRAIN WITH PERFORATED PVC STANDPIPE, STAINLESS STEEL MESH COVERED CAST IRON DOME AND TOP 12" X 12" DUCTILE IRON STRAINER

R1200-JD-W31P24L-F1444 OPTIONAL VARIATIONS:

SUFFIX	DESCRIPTION	LIST PRICE
-1	Nickel bronze veneer	$ 1108.00
-3	Stainless steel veneer	$ 1108.00
-3P	Perforated Stainless Steel standpipe (Type 304) - 24" (Add **$375.00** per 1" over 24")	$ 3751.00
-6	Vandal proof (Metal dome only) (H-1029)	$ 164.00
-11	Acid resistant epoxy coated body, membrane clamp & dome	$ 1764.00
-12	Galvanized metal dome	$ 477.00
-12A	Galvanized body and membrane clamp	$ 1246.00
-12B	Galvanized metal dome and membrane clamp	$ 864.00
-13	Galvanized body, membrane clamp and dome	$ 1770.00
-28	Stainless steel body (Type 304)	$ 4702.00
-84	Stainless Steel mesh screen around standpipe (Add **$250.00** per 1" over 24")	$ 2500.00
-B	Sump receiver (A2-BP)	$ 356.00
-C	Secondary clamp (A2-C3)	$ 319.00
-E	Adjustable extension	$ 943.00
-EG	Galvanized adjustable extension	$ 1397.00
-G	Ballast guard (A2-BG)	$ 1022.00
P	Push on outlet (2", 3", 4", 5" or 6")	No Add
-P(*)L	(*) indicates total custom length of PVC standpipe required.	$ 148.00 per 1" over 24"
T	Threaded outlet (2", 3", 4", 5" or 6")	$ 107.00
-U	Underdeck clamp (A2-C3)	$ 319.00
-V	Fixed extension, (2",3",4") (A2-V2, A2-V3, A2-V4)	$ 860.00
-VG	Galvanized fixed extension, (2",3",4")	$ 1295.00
-W-1	Water proofing flange (A2-W-1)	$ 578.00
X	Inside caulk outlet, (2", 3", 4", 5" or 6")	No Add
-Z	Extended wide flange on body (20" Dia. x 1/4 thick)	$ 1724.00

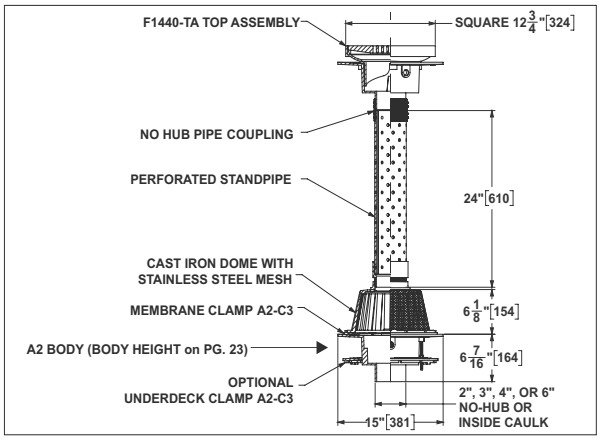

Description: MIFAB R1200-JD-W31P24L-F1444 large green roof drain with 15" diameter, lacquered cast iron A2 body with combination membrane clamp and gravel guard with cast iron, stainless steel mesh covered dome and 24" high perforated PVC standpipe with cast iron body and 12" x 12" ductile iron strainer on top.

MODEL NO.	PIPE SIZE	LIST PRICE
R1202,3,4-JD-W31P24L-F1444	2", 3", 4"	$ 10,498.00
R1205,6-JD-W31P24L-F1444	5", 6"	$ 10,845.00
R1208-JD-W31P24L-F1444	8"	$ 11,237.00

R1200-JD-W30 LARGE GREEN ROOF DRAIN WITH STAINLESS STEEL MESH COVERED CAST IRON DOME AND TOP PVC CAP R1200-JD-W30

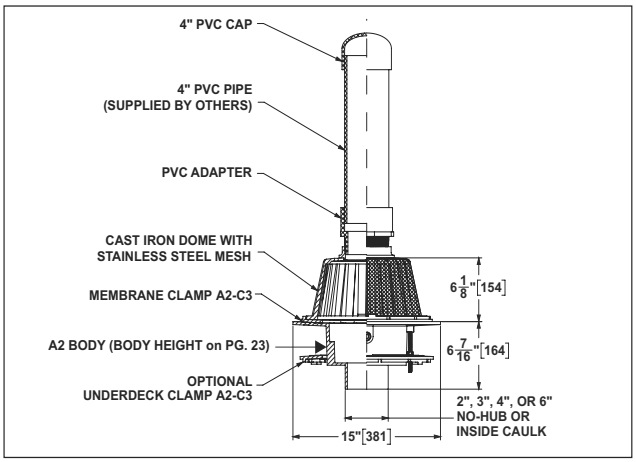

Description: MIFAB R1200-JD-W30 large green roof drain with 15" diameter, lacquered cast iron A2 body with combination membrane clamp and gravel guard with cast iron, stainless steel mesh covered dome and top PVC cap.

MODEL NO.	PIPE SIZE	LIST PRICE
R1202,3,4-JD-W30	2", 3", 4"	$ 7626.00
R1205,6-JD-W30	5", 6"	$ 8026.00
R1208-JD-W30	8"	$ 8419.00

R1200-JD-W30 OPTIONAL VARIATIONS:

SUFFIX	DESCRIPTION	LIST PRICE
-6	Vandal proof (Metal dome only) (H-1029)	$ 164.00
-11	Acid resistant epoxy coated body, membrane clamp & dome	$ 1764.00
-12	Galvanized metal dome	$ 477.00
-12A	Galvanized body and membrane clamp	$ 1246.00
-12B	Galvanized metal dome and membrane clamp	$ 864.00
-13	Galvanized body, membrane clamp and dome	$ 1770.00
-28	Stainless steel body (Type 304)	$ 4702.00
-B	Sump receiver (A2-BP)	$ 356.00
-C	Secondary clamp (A2-C3)	$ 319.00
-E	Adjustable extension	$ 943.00
-EG	Galvanized adjustable extension	$ 1397.00
-G	Ballast guard (A2-BG)	$ 1022.00
P	Push on outlet (2", 3", 4", 5" or 6")	No Add
T	Threaded outlet (2", 3", 4", 5" or 6")	$ 107.00
-U	Underdeck clamp (A2-C3)	$ 319.00
-V	Fixed extension, (2",3",4") (A2-V2, A2-V3, A2-V4)	$ 860.00
-VG	Galvanized fixed extension, (2",3",4")	$ 1295.00
-W-1	Water proofing flange (A2-W-1)	$ 578.00
X	Inside caulk outlet, (2", 3", 4", 5" or 6")	No Add
-Z	Extended wide flange on body (20" Dia. x 1/4 thick)	$ 1724.00

R1200-JD-G18H-W31P-16.5L LARGE GREEN ROOF DRAIN WITH STAINLESS STEEL BALLAST GUARD AND PVC PERFORATED STANDPIPE R1200-JD-G18H-W31P-16.5L

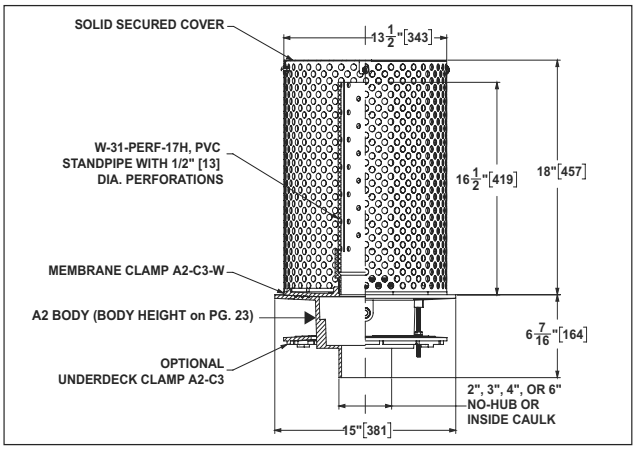

Description: MIFAB R1200-JD-G18H-W31P-16.5L large green roof drain with 15" diameter, lacquered cast iron A2 body with combination membrane clamp and gravel guard with 18" high stainless steel ballast guard with solid secured cover and internal, perforated PVC standpipe.

MODEL NO.	PIPE SIZE	LIST PRICE
R1202,3,4-JD-G18H-W31P-16.5L	2", 3", 4"	$ 10,075.00
R1205,6-JD-G18H-W31P-16.5L	5", 6"	$ 10,474.00
R1208-JD-G18H-W31P-16.5L	8"	$ 10,870.00

R1200-JD-G18H-W31P-16.5L OPTIONAL VARIATIONS:

SUFFIX	DESCRIPTION	LIST PRICE
-3	Perforated Stainless Steel standpipe (Type 304) - 16 1/2"	$ 2814.00 (Add $281.00 per 1" over 16 1/2")
-11	Acid resistant epoxy coated body, membrane clamp & dome	$ 1764.00
-12A	Galvanized body and membrane clamp	$ 1246.00
-13	Galvanized body, membrane clamp and dome	$ 1770.00
-28	Stainless steel body (Type 304)	$ 4702.00
-84	Stainless Steel mesh screen around standpipe (Add $189.00 per 1" over 16 1/2")	$ 1875.00
-B	Sump receiver (A2-BP)	$ 356.00
-C	Secondary clamp (A2-C3)	$ 319.00
-E	Adjustable extension	$ 943.00
-EG	Galvanized adjustable extension	$ 1397.00
P	Push on outlet (2", 3", 4", 5" or 6")	No Add
-P(*)L	(*) indicates total custom length of PVC standpipe required.	$ 152.00 per 1" over 16 1/2"
T	Threaded outlet (2", 3", 4", 5" or 6")	$ 107.00
-U	Underdeck clamp (A2-C3)	$ 319.00
-V	Fixed extension, (2",3",4") (A2-V2, A2-V3, A2-V4)	$ 860.00
-VG	Galvanized fixed extension, (2",3",4")	$ 1295.00
-W-1	Water proofing flange (A2-W-1)	$ 578.00
X	Inside caulk outlet, (2", 3", 4", 5" or 6")	No Add
-Z	Extended wide flange on body (20" Dia. x 1/4 thick)	$ 1724.00

Design and dimensions are subject to modification. Prices do not include applicable taxes. Visit **www.mifab.com** for the most recent product information.
MIFAB®, Inc., 1321 West 119th Street, Chicago, Illinois 60643-5109, USA Toll Free: 1-800-465-2736 • Fax: 1-773-341-3049
All sales subject to MIFAB's® Terms & Warranties. Please refer to inside front cover. sales@mifab.com • Canada Toll Free: 1-800-387-3880

CLEANOUTS AND ACCESS COVERS

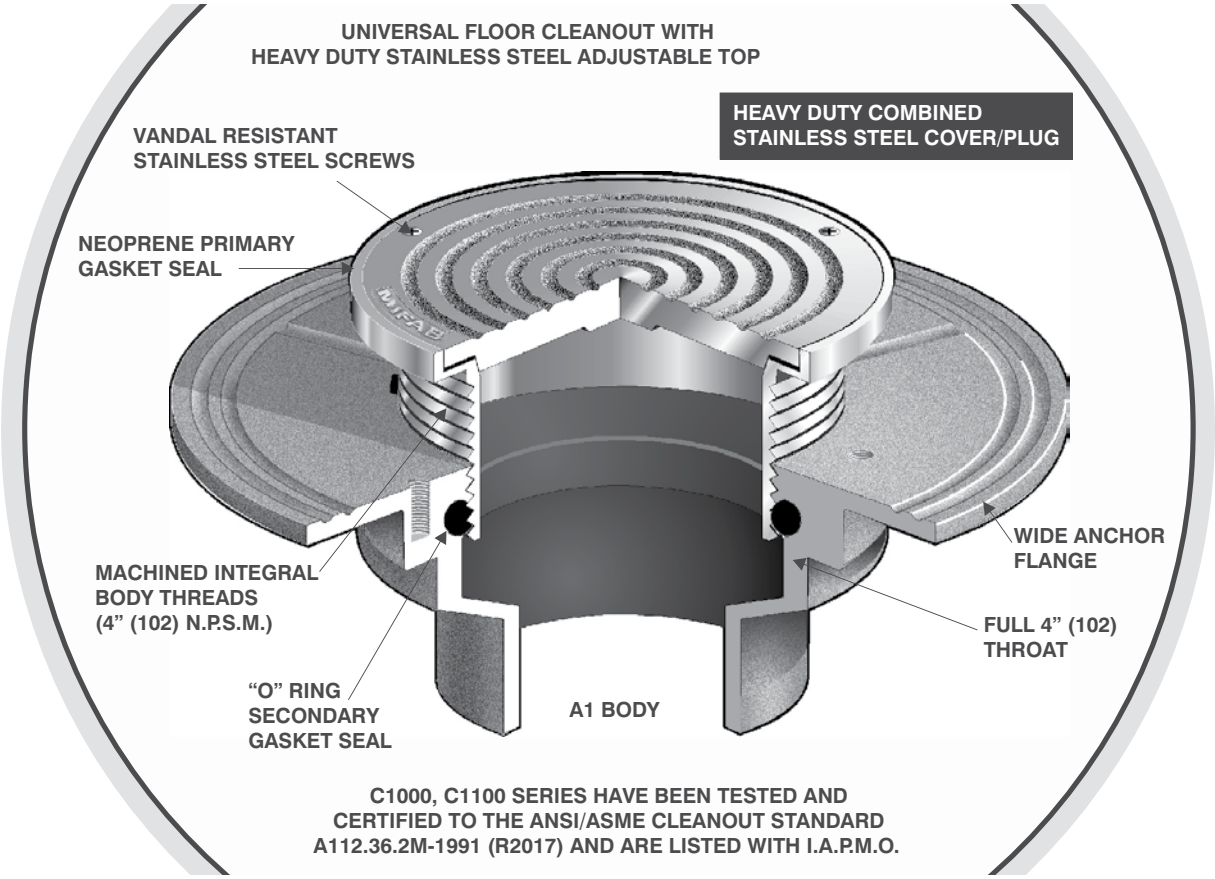

TOP SET® FINISHED CLEANOUT

The patent pending MIFAB® Top Set® finished cleanout ships complete with a ½" thick plastic cover to protect the cover during the concrete pour. The installer "shoots their level" to the top of the plastic cover and pours the concrete to the top level of the plastic cap. Channel locks are used to remove the cover after the concrete pour has settled. Then, remove the solid cleanout cover and use an allen key screwdriver to engage the three screws located underneath the cover. Turn the screws the same amount to elevate the cover up to the finished floor level. Turn the screws a different amount each to tilt the cover to the same angle as the finished floor.

Advantages of the Top Set Floor Cleanout:

- Plastic cover protects the cover during the concrete pour
- Adjustment after the pour is easy – no need to waste time to find the cover – it is already included in the Top Set cleanout assembly
- Ability to tilt the cover to match the uneven finished floor level

The List Price of the C1100-TOS-1 Top Set cleanout is the same as the List Price for the C1100-R on page 168.

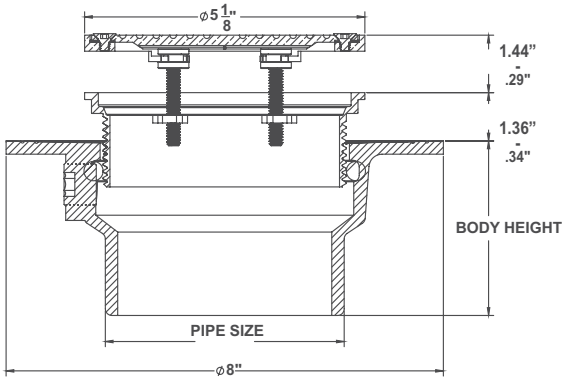

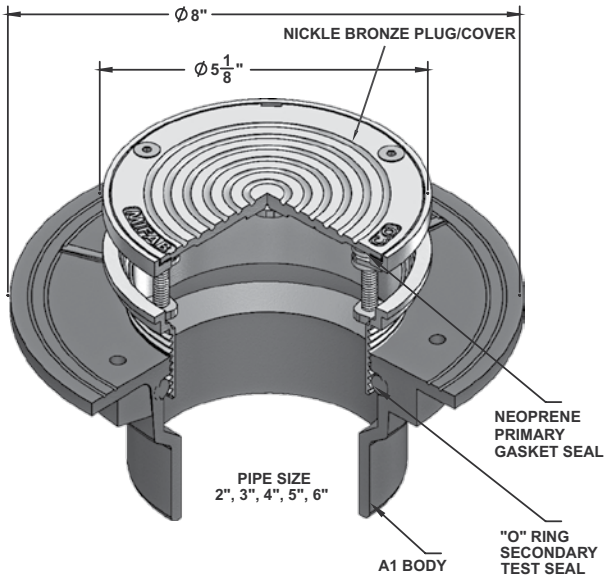

MIFAB Cleanout Features

MIFAB Floor cleanouts feature a wide flange cleanout body with an adjustable stainless steel or nickel bronze combined access cover and gasketed plug with O-ring test seal. A floor cleanout is an Emergency Access to a plugged drain line. It makes sense for the cleanout to be designed for immediate access without the need to use special tools and/or clear debris from the plug to gain access. It is also important to ensure the cleanout has been resealed after the cleaning of the drain line to eliminate sewer gas escape. It is preferable that the cleanout design will provide visual assurance that the cleanout has been resealed.

THE CONVENTIONAL SYSTEM

The conventional floor cleanout is usually comprised of an unsealed access cover secured to a housing or frame by up to four (4) screws. Removal of these screws provides access to an opening that more often than not is fouled by construction debris that has entered under the housing, which supports the cover or has entered between the unsealed cover and frame. After removal of the debris, the maintenance person is faced with the removal of a cast iron, brass or plastic threaded plug that has likely seized in place because of dissimilar metals, rust and dirt. The removal of this plug is usually accomplished by breaking (chiselling) it out. Finally, there is an open access, usually less than the four (4) inch opening required by code. After removal of the blockage there is a very good chance that the non-gasketed cover will be replaced because a replacement plug has been almost impossible to source. This does not provide any visual evidence that a plug is not in place and there is the danger of the escape of sewer gas.

THE MIFAB SYSTEM The

MIFAB design of combined gasketed access cover and cleanout plug grants immediate emergency access with the removal of the combined cover/plug by unscrewing three vandal-resistant stainless steel screws. This provides access to a full four (4) inch opening as required by most codes. Replacement of the cover with neoprene gasket glued to the underside provides visual evidence that the cleanout has been properly resealed. If for any reason the gasket has been displaced then the cover will sit low in the frame and it will be obvious that the cleanout has not been properly resealed providing visual evidence of the danger of escaping sewer gas. (See Exhibit A)

Exhibit A

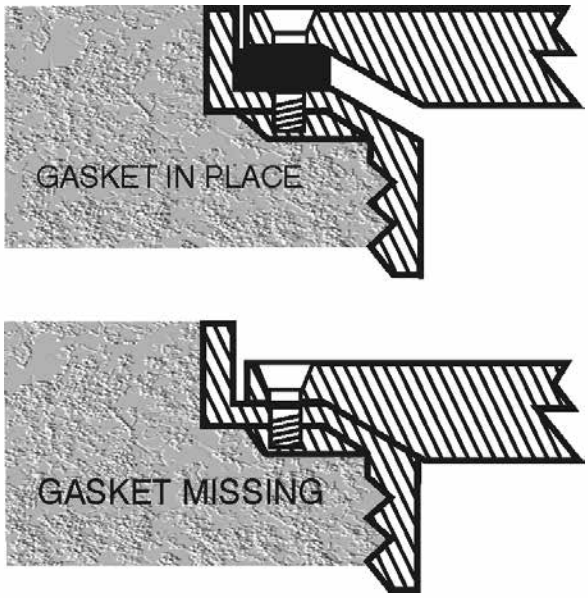

Design and dimensions are subject to modification. Prices do not include applicable taxes. Visit **www.mifab.com** for the most recent product information.
MIFAB®, Inc., 1321 West 119th Street, Chicago, Illinois 60643-5109, USA Toll Free: 1-800-465-2736 • Fax: 1-773-341-3049
All sales subject to MIFAB's® Terms & Warranties. Please refer to inside front cover. sales@mifab.com • Canada Toll Free: 1-800-387-3880

CLEANOUTS CLEANOUT FUNCTION AND SELECTION GUIDE CLEANOUTS

Cleanouts provide access to drainage piping for cleaning out purposes. Since there are a variety of sizes, shapes and materials available, certain considerations must be made when selecting the right cleanout for installation. MIFAB offers many options that may be incorporated together for the perfect solution in all types of construction.

SELECTION OF TOP

The first factor in selecting a top is to decide what shape would be most compatible with the area surrounding it. In most cases a round top is most easily orientated to the floor because it does not conflict with designs, nor does it require alignment to adjacent walls. For floors that are finished of material in a square or straight-line pattern, a square top is available, allowing alignment with tile and adjacent walls. Areas with finished floors, such as offices, hospitals, restaurants and modern manufacturing areas will require finished floor cleanouts. A regularly secured scoriated top is recommended in most cases. Finishes include nickel bronze and stainless steel. The type of traffic that the cleanout top must withstand should be considered. For all loads, the stainless steel top can be used. A scoriated top will service most finished floors. They feature a corrosion-resistant, non-skid finish that will not discolor and will look attractive with almost any surroundings. Vandal-proof screws are available to prevent theft or damage to the inner components of the cleanout. Specify suffix (-6) for Vandal-proof screws. Areas with unfinished floors or areas with possible heavy load traffic such as boiler rooms, warehouses and heavy manufacturing facilities, a ductile iron top should be specified. In areas where the cleanout is concealed, various access covers are available to allow access to the cleanout. A carpet marker should be specified in floors where a minimum showing of metal is desired to indicate the placement of the cleanout. Specify suffix (-RC) for stainless steel carpet marker.

SUGGESTED CLEANOUT SPECIFICATIONS

Cleanouts connected to the drainage system shall be of the same size as pipe up to 4" (25) and not less than 4" (25) on larger sizes (and/or as required by local code*). Cleanouts shall be installed in the building drain as near as practicable to the inner face of the wall through which the drain passes. Where a building trap is inside the building, the cleanout shall be installed at the foot of each vertical sanitary or storm stack; at the end of drainage lines and at all changes of direction of 45 degrees or more. Cleanouts in horizontal drainage lines shall be at the intervals of no more than fifty feet on pipe up to 4" (25) in size and not more than one hundred feet on larger sizes (and/or as required by local code*).

*Check to see if it is necessary to modify above paragraphs to meet local code

*Cleanouts provide an emergency access to the drainage system. Ordinarily they are only opened where there is a blockage in the system when they are likely to release a head of sewage when opened. For this reason, the following general clause should be included. Whenever possible, cleanouts shall be installed so as to provide access from the finished floor. This applies at all floor levels. When cleanouts are located in membrane floors, they shall be supplied with wide anchor flange and clamp devices. Cleanouts in finished areas shall have adjustable round (square) satin stainless steel or nickel bronze tops with scoriated covers to match flooring as specified below.

Suffixes with (-R) have round tops and suffixes with (-S) have square tops. Select applicable catalog number.
Polished stainless steel tops that will not oxidize and are heavy duty should be specified by adding suffix (-3)

FINISHED FLOORS (ALL TRAFFIC) C1000-R(S)-3 - non-membrane, C1000-C-R(S)-3 - membrane. Lino tile areas: C1100-T(TS) - non-membrane, C1100-C-T(TS) - membrane. Ceramic and terrazzo areas: C1100-U(US) - non-membrane, C1100-C-U(US) - membrane.

CARPETED FLOOR AREAS C1100-RC - non-membrane, C1100-C-RC - membrane. UNFINISHED OR OUTSIDE AREAS C1100-XR ductile iron top, non-membrane C1100-C-XR ductile iron top, membrane line cleanouts

ALL EXPOSED OR ACCESSIBLE AREAS C1450

CONCEALED TILE OR MASONRY C1450-RD-3

ALL OTHER CONCEALED AREAS C1450 with applicable access doors specified under access doors

STACK CLEANOUTS, EXPOSED OR ACCESSIBLE AREAS C1450

CONCEALED TILES OR MASONRY AREAS C1460-RD-3

ALL OTHER CONCEALED AREAS C1460 with applicable access door specified under access doors.
*Author's suggestions to specifier () denotes optional square covers

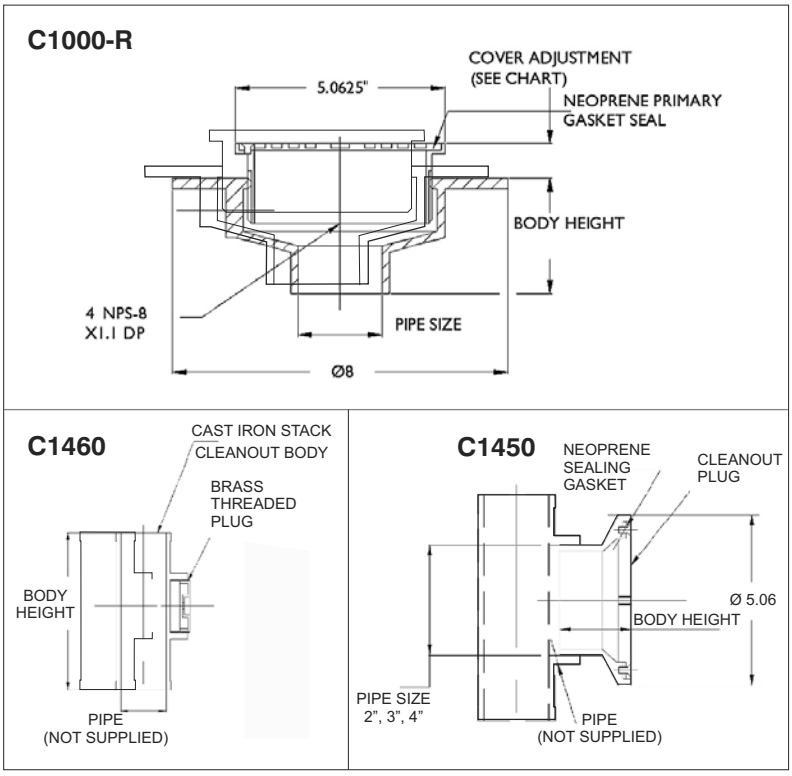

CLEANOUTS

C1000-R FLOOR CLEANOUT WITH STAINLESS STEEL ROUND TOP C1000-R

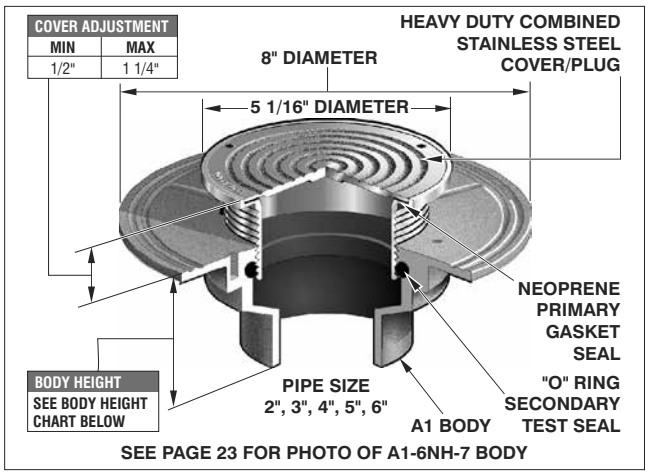

SEE PAGE 23 FOR PHOTO OF A1-6NH-7 BODY

C1000 MEETS ANSI CLEANOUT STANDARD A112.36.2M-1991 (R2017)

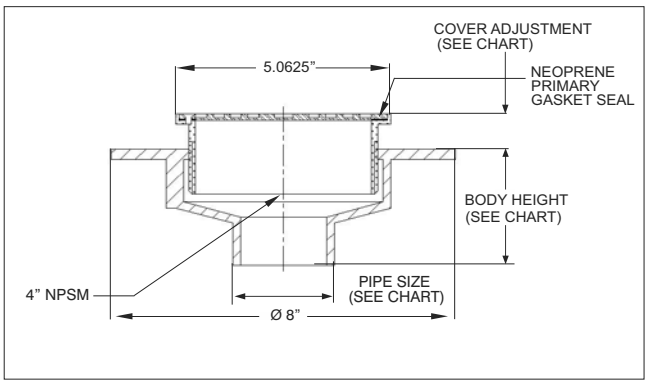

PARTS	A1 BODY	R-3

ANSI/ASME RATING	
COVER	LOAD RATING
5" DIA. SS	5000-7499 lbs

A1 BODY HEIGHT

PIPE SIZE	NO HUB (STANDARD)	PUSH ON (P)	THREADED (T)	INSIDE CAULK (X)	PVC (-30)	ABS (-31)
2"	3"	3 3/8"	2 1/4"	3 3/4"	2 5/8"	
3"	3"	3 3/8"	2 5/8"	3 3/4"	3 1/4"	
4"	3"	3 3/8"	2 5/8"	3 3/4"	3 1/2"	
5"	3"	-	2 5/8"	6 7/8"	-	
6"	3 1/2"	6 7/8"	-	-	-	

C1000-R FLOOR CLEANOUT WITH STAINLESS STEEL ROUND TOP

MODEL NUMBER	WT. Lbs	COVER SIZE	OUTLET SIZE	LACQUERED CAST IRON BODY WITH STAINLESS STEEL (-3)
C1002-R-3	6.30	5" Round	2"	$ 816.00
C1003-R-3	5.75	5" Round	3"	$ 860.00
C1004-R-3	5.50	5" Round	4"	$ 1151.00
C1005,6-R-3	7.50	5" Round	5", 6"	$ 1867.00

C1000-R AND C1100-R OPTIONAL VARIATIONS:

SUFFIX	DESCRIPTION		SUFFIX	DESCRIPTION	LIST PRICE
-6	Security screws (TR25 Torx & pin) (H-1039A)	$ 96.00	-95	Client logo (-3 only)	$ 1175.00
-11	Acid resistant epoxy coated body	$ 459.00	-C	Membrane clamp (A1-C1)	$ 103.00
-13	Galvanized body	$ 292.00	-NH	No hub outlet	Standard
-28	Stainless steel body (Type 304) (2", 3", 4" No Hub Only)	$ 1581.00	P	Push on outlet (2", 3", 4")*	No Add
-30	PVC socket connection body* (2", 3", 4")	No Add	T	Threaded outlet (2", 3", 4")	$ 107.00
-31	ABS socket connection body* (2", 3", 4")	No Add	X	Inside caulk outlet (2", 3", 4")	No Add
-34	T-cone plug and gasket (2", 3", 4") (C1440 Series)	$ 477.00	-Z	Extended wide flange on body (13" dia. x 1/8" thick)	$ 1724.00

*2", 3", 4" socket connections only *Specify POG-6 for C.I. pipe and POG-6-PVC for PVC pipe. 2", 3", 4" sizes use same gasket.

C1100-R FLOOR CLEANOUT WITH NICKEL BRONZE ROUND TOP C1100-R

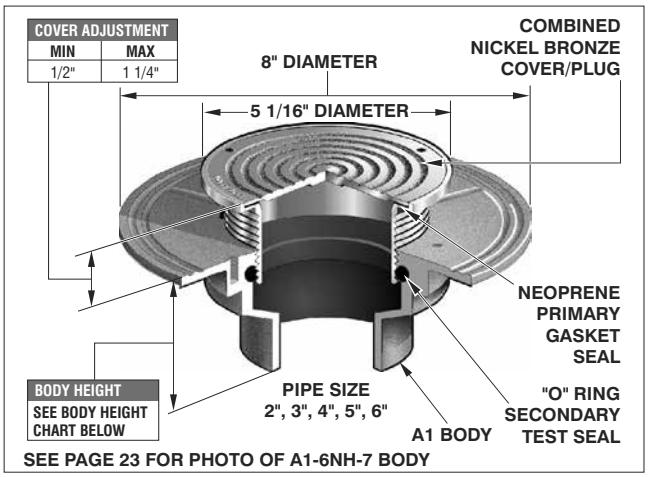

SEE PAGE 23 FOR PHOTO OF A1-6NH-7 BODY

C1100 MEETS ANSI CLEANOUT STANDARD A112.36.2M-1991 (R2017)

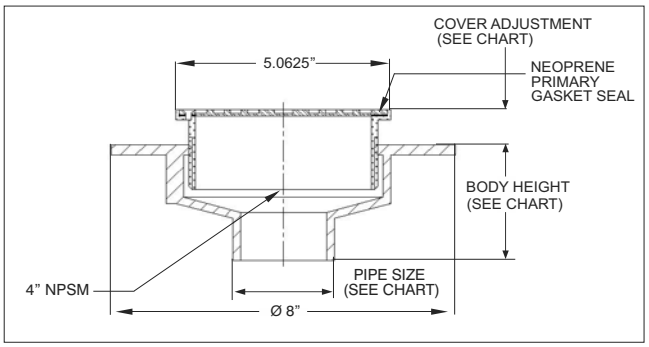

ANSI/ASME RATING	
COVER	LOAD RATING
5" DIA. NB	2000-4999 lbs
5" DIA. SS	5000-7499 lbs
5" DIA. DI	OVER 10,000 lbs

PARTS	A1 BODY	R-(*)

*Specify -1, -3 or XR-4

C1100-R FLOOR CLEANOUT WITH NICKEL BRONZE ROUND TOP

MODEL NUMBER	WT. Lbs	COVER SIZE	OUTLET SIZE	LACQUERED CAST IRON BODY WITH: NICKEL BRONZE (-1)	STAINLESS STEEL (-3)	DUCTILE IRON (-4)
C1102-R	6.30	5" Round	2"	$ 816.00	$ 816.00	$ 666.00
C1103-R	5.75	5" Round	3"	$ 860.00	$ 860.00	$ 759.00
C1104-R	5.50	5" Round	4"	$ 1151.00	$ 1151.00	$ 906.00
C1105,6-R	7.50	5" Round	5", 6"	$ 1867.00	$ 1867.00	$ 1575.00

Design and dimensions are subject to modification. Prices do not include applicable taxes. Visit **www.mifab.com** for the most recent product information.
MIFAB®, Inc., 1321 West 119th Street, Chicago, Illinois 60643-5109, USA Toll Free: 1-800-465-2736 • Fax: 1-773-341-3049
All sales subject to MIFAB's® Terms & Warranties. Please refer to inside front cover. sales@mifab.com • Canada Toll Free: 1-800-387-3880

C1100-RC FLOOR CLEANOUT WITH ROUND TOP AND CARPET MARKER C1100-RC

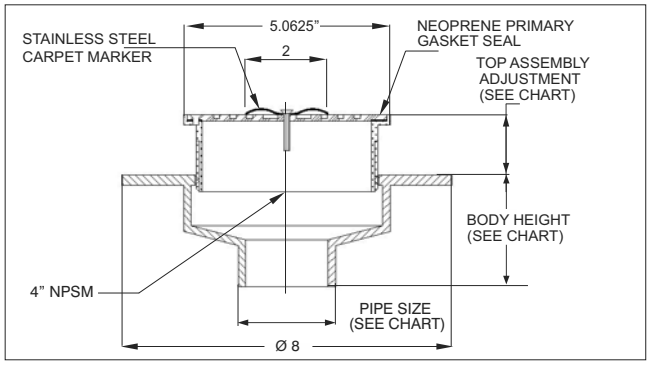

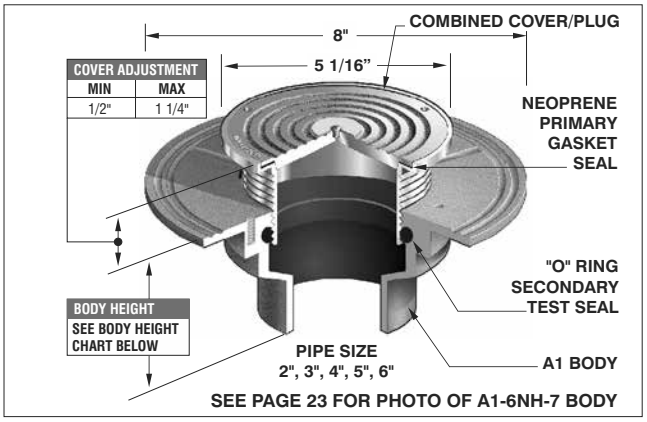

SEE PAGE 23 FOR PHOTO OF A1-6NH-7 BODY

PARTS | A1 BODY | RC-1

C1100 MEETS ANSI CLEANOUT STANDARD A112.36.2M-1991 (R2017)

ANSI/ASME RATING	
COVER	LOAD RATING
5" DIA. NB	2000-4999 lbs

C1100-RC FLOOR CLEANOUT WITH ROUND TOP AND CARPET MARKER

MODEL NUMBER	WT. Lbs	COVER SIZE	OUTLET SIZE	LAQ. CAST IRON BODY W/NICKEL BRONZE (-1)
C1102-RC	6.30	5" Round	2"	$ 923.00
C1103-RC	5.75	5" Round	3"	$ 967.00
C1104-RC	5.50	5" Round	4"	$ 1258.00
C1105,6-RC	7.50	5" Round	5", 6"	$ 1974.00
Add for large marker -F		5 1/2" Dia. SS marker flange		$ 374.00

A1 BODY HEIGHT

PIPE SIZE	NO HUB (STANDARD)	PUSH ON (P)	THREADED (T)	INSIDE CAULK (X)	PVC (-30)	ABS (-31)
2"	3"	3 3/8"	2 1/4"	3 3/4"	2 5/8"	
3"	3"	3 3/8"	2 5/8"	3 3/4"	3 1/4"	
4"	3"	3 3/8"	2 5/8"	3 3/4"	3 1/3"	
5"	3"	-	2 5/8"	6 7/8"	-	
6"	3 1/2"	6 7/8"	-	-	-	

C1100-RC AND C1100-RFC OPTIONAL VARIATIONS:

SUFFIX	DESCRIPTION	LIST PRICE	SUFFIX	DESCRIPTION	LIST PRICE
-6	Security screws (TR25 Torx and Pin) (H-1039A)	$ 96.00	-95	Client logo (-3 only)	$ 1175.00
-11	Acid resistant epoxy coated body	$ 459.00	-C	Membrane clamp (A1-C1)	$ 103.00
-13	Galvanized body	$ 292.00	-NH	No hub outlet	Standard
-28	Stainless steel body (Type 304) (2", 3", 4" No Hub Only)	$ 1581.00	P	Push on outlet (2", 3", 4")*	No Add
-30	PVC socket connection body* (2", 3", 4")	No Add	T	Threaded outlet (2", 3", 4")	$ 107.00
-31	ABS socket connection body* (2", 3", 4")	No Add	X	Inside caulk outlet (2", 3", 4")	No Add
-34	T-cone plug and gasket (2", 3", 4")(C1440 Series)	$ 477.00	-Z	Extended wide flange on body (13" dia. x 1/8" thick)	$ 1724.00

*2", 3", 4" socket connections only *Specify POG-6 for C.I. pipe and POG-6-PVC for PVC pipe. 2", 3", 4" sizes use same gasket.

C1100-RFC FLOOR CLEANOUT WITH ROUND TOP AND CLAMPING FLANGE C1100-RFC

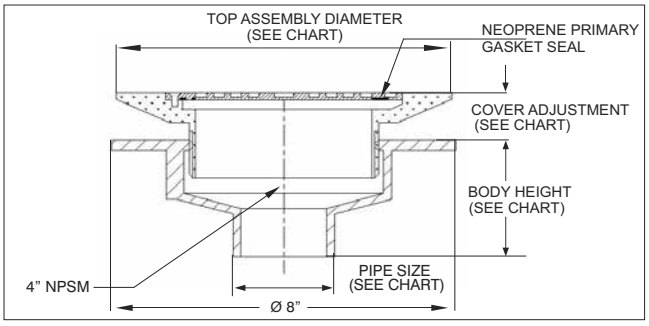

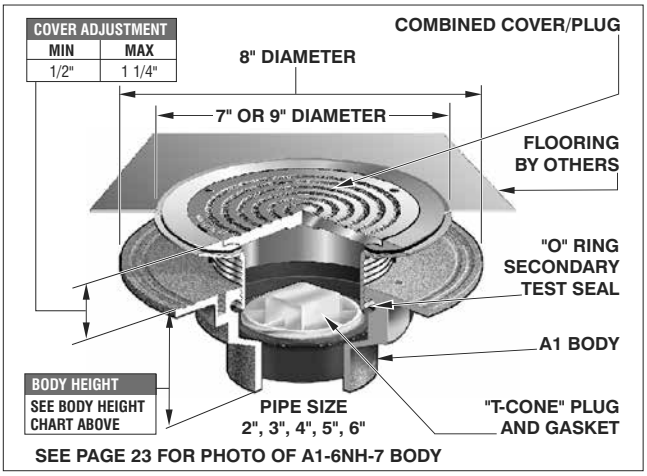

SEE PAGE 23 FOR PHOTO OF A1-6NH-7 BODY

PARTS | C144(*) | A1 BODY | RFC7 or 9-3

*2, 3 or 4

C1100-RFC FLOOR CLEANOUT WITH ROUND TOP AND CLAMPING FLANGE

MODEL NUMBER	WT. Lbs	COVER SIZE	OUTLET SIZE	LACQUERED CAST IRON BODY WITH: NICKEL BRONZE (-1) 7" DIA ONLY	STAINLESS STEEL (-3)
C1102,3,4-RFC7	7.50	7" Round	2", 3", 4"	$ 1190.00	$ 1190.00
C1105,6-RFC7	8.50	7" Round	5", 6"	$ 2241.00	$ 2241.00
C1102,3,4-RFC9	8.50	9" Round	2", 3", 4"	-	$ 1531.00
C1105,6-RFC9	9.50	9" Round	5", 6"	-	$ 2592.00

ANSI/ASME RATING	
COVER	LOAD RATING
SS	5000-7499 lbs
NB	2000-4999 lbs

C1100 MEETS ANSI CLEANOUT STANDARD A112.36.2M-1991 (R2017)

CLEANOUTS

C1100-S FLOOR CLEANOUT WITH SQUARE TOP

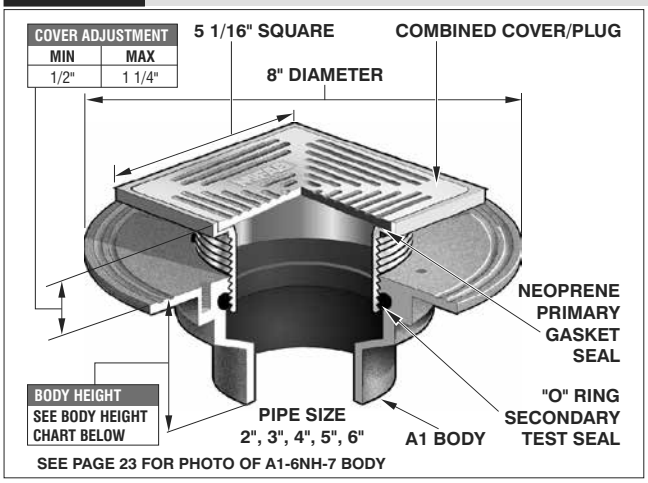

SEE PAGE 23 FOR PHOTO OF A1-6NH-7 BODY

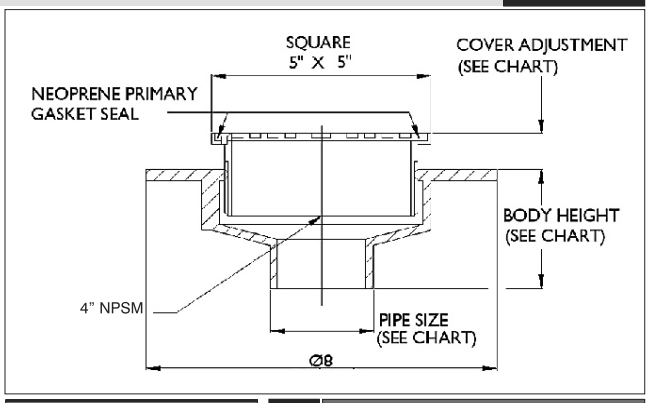

NOTE: 6" x 6" NB(-1) and SS (-3) covers also available.
Add **$246.00** and add 6 before S in model number to order.

C1100 MEETS ANSI CLEANOUT STANDARD A112.36.2M-1991 (R2017)

ANSI/ASME RATING	
COVER	LOAD RATING
5",6" SQ. NB	2000-4999 lbs
5",6" SQ. SS	5000-7499 lbs

*Specify 6S-1 or 6S-3 for 6" x 6" part

PARTS

A1 BODY	S-1 or -3

C1100-S FLOOR CLEANOUT WITH SQUARE TOP				
MODEL NUMBER	WT. Lbs	COVER SIZE	OUTLET SIZE	LACQUERED CAST IRON BODY WITH NB (-1) OR SS (-3)
C1102-S	7.25	5" x 5"	2"	$ 816.00
C1103-S	7.00	5" x 5"	3"	$ 860.00
C1104-S	6.90	5" x 5"	4"	$ 1151.00
C1105,6-S	8.50	5" x 5"	5", 6"	$ 1867.00

A1 BODY HEIGHT					
PIPE SIZE	NO HUB STANDARD	PUSH ON (P)	THREADED (T)	INSIDE CAULK (X)	PVC (-30)
2 "	3"	3 3/8"	2 1/4"	3 3/4"	2 5/8"
3"	3"	3 3/8"	2 5/8"	3 3/4"	3 1/4"
4"	3"	3 3/8"	2 5/8"	3 3/4"	3 1/2"
5"	3"	-	2 5/8"	6 7/8"	-
6"	3 1/2"	6 7/8"	-	-	-

C1100-S AND C1100-T OPTIONAL VARIATIONS:

SUFFIX	DESCRIPTION	LIST PRICE	SUFFIX	DESCRIPTION	LIST PRICE
-6	Security screws (TR25 Torx & pin) (H-1039A)	$ 96.00	-95	Client logo (-3 only)	$ 1175.00
-11	Acid resistant epoxy coated body	$ 459.00	-C	Membrane clamp (A1-C1)	$ 103.00
-13	Galvanized body	$ 292.00	-NH	No hub outlet	Standard
-28	Stainless steel body (Type 304) (2", 3", 4" No Hub Only)	$ 1581.00	P	Push on outlet (2", 3", 4")*	No Add
-30	PVC socket connection body* (2", 3", 4")	No Add	T	Threaded outlet (2", 3", 4")	$ 107.00
-31	PVC socket connection body* (2", 3", 4")	No Add	X	Inside caulk outlet (2", 3", 4")	No Add
-34	T-cone plug and gasket (2", 3", 4")(C1440 Series)	$ 477.00	-Z	Extended wide flange on body (13" dia. x 1/8" thick)	$ 1724.00

NOTE: 6" x 6" NB(-1) and SS (-3) covers also available. **Add $246.00** and add 6 before S in model number to order.
Specify POG-6 for C.I. pipe and POG-6-PVC for 6" PVC pipe. 2", 3", 4" sizes use same gasket.

C1100-T FLOOR CLEANOUT WITH ROUND TOP AND TILE RECESS

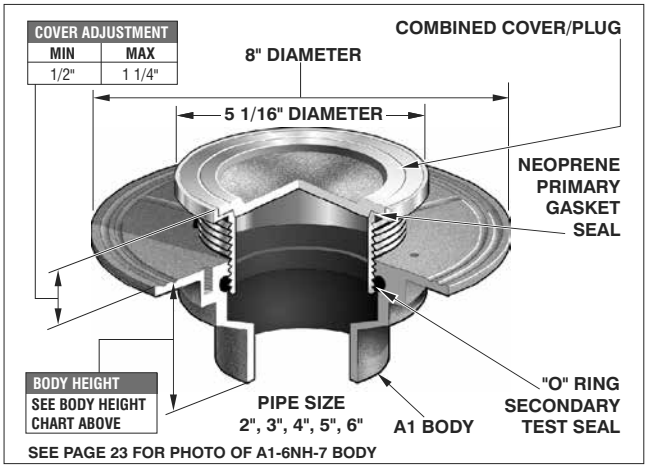

SEE PAGE 23 FOR PHOTO OF A1-6NH-7 BODY

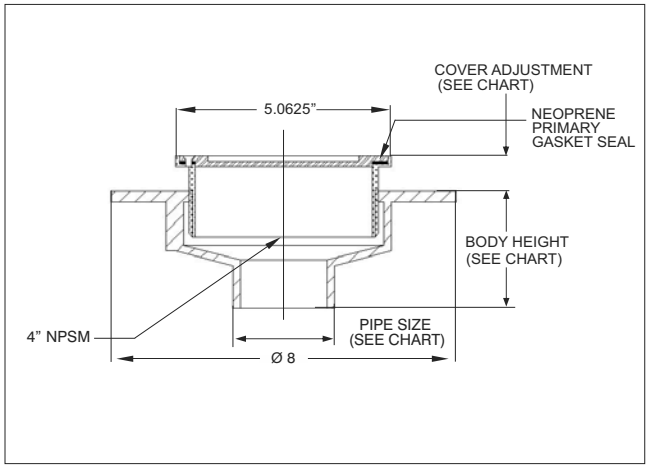

C1100-T FLOOR CLEANOUT WITH ROUND TOP AND TILE RECESS				
MODEL NUMBER	WT. Lbs	COVER SIZE	OUTLET SIZE	LACQUERED CAST IRON BODY WITH NB (-1) OR SS (-3)
C1102-T	7.25	5" round	2"	$ 816.00
C1103-T	7.00	5" round	3"	$ 860.00
C1104-T	6.90	5" round	4"	$ 1151.00
C1105,6-T	8.50	5" round	5", 6"	$ 1867.00

ANSI/ASME RATING	
COVER	LOAD RATING
5" DIA. NB	2000-4999 lbs
5" DIA. SS	5000-7499 lbs

C1100 MEETS ANSI CLEANOUT STANDARD A112.36.2M-1991 (R2017)

PARTS

A1 BODY	T-1 or -3

Design and dimensions are subject to modification. Prices do not include applicable taxes. Visit **www.mifab.com** for the most recent product information.
MIFAB®, Inc., 1321 West 119th Street, Chicago, Illinois 60643-5109, USA Toll Free: 1-800-465-2736 • Fax: 1-773-341-3049
All sales subject to MIFAB's® Terms & Warranties. Please refer to inside front cover. sales@mifab.com • Canada Toll Free: 1-800-387-3880

C1100-TS FLOOR CLEANOUT WITH SQUARE TOP AND TILE RECESS C1100-TS

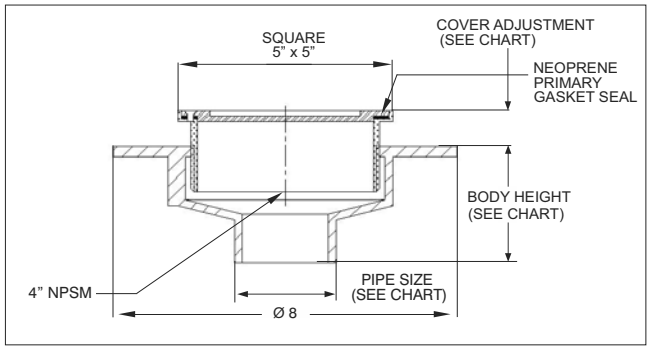

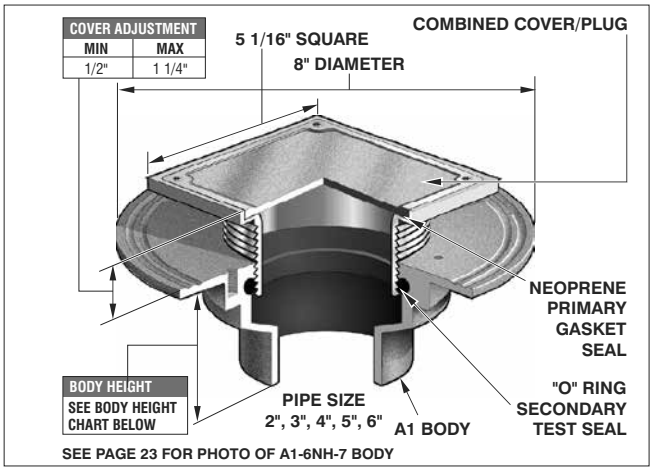

SEE PAGE 23 FOR PHOTO OF A1-6NH-7 BODY

C1100 MEETS ANSI CLEANOUT STANDARD A112.36.2M-1991 (R2017)

ANSI/ASME RATING	
COVER	LOAD RATING
5" x 5" NB	2000-4999 lbs
5" x 5" SS	5000-7499 lbs

PARTS

A1 BODY	TS-1 or -3

C1100-TS FLOOR CLEANOUT W/SQUARE TOP & TILE RECESS				
MODEL NUMBER	WT. Lbs	COVER SIZE	OUTLET SIZE	LACQUERED CAST IRON BODY WITH NB (-1) OR SS (-3)
C1102-TS	6.50	5" x 5"	2"	$ 816.00
C1103-TS	6.00	5" x 5"	3"	$ 860.00
C1104-TS	6.50	5" x 5"	4"	$ 1151.00
C1105,6-TS	8.00	5" x 5"	5", 6"	$ 1867.00

A1 BODY HEIGHT					
PIPE SIZE	NO HUB (STANDARD)	PUSH ON (P)	THREADED (T)	INSIDE CAULK (X)	PVC (-30) ABS (-31)
2"	3"	3 3/8"	2 1/4"	3 3/4"	2 5/8"
3"	3"	3 3/8"	2 5/8"	3 3/4"	3 1/4"
4"	3"	3 3/8"	2 5/8"	3 3/4"	3 1/2"
5"	3"	-	2 5/8"	6 7/8"	-
6"	3 1/2"	6 7/8"	-	-	-

C1100-TS AND C1100-UR OPTIONAL VARIATIONS:					
SUFFIX	DESCRIPTION	LIST PRICE	SUFFIX	DESCRIPTION	LIST PRICE
-6	Security screws (TR25 Torx & pin) (H-1039A)	$ 96.00	-95	Client logo (-3 only)	$ 1175.00
-11	Acid resistant epoxy coated body	$ 459.00	-C	Membrane clamp (A1-C1)	$ 103.00
-13	Galvanized body	$ 292.00	-NH	No hub outlet	Standard
-28	Stainless steel body (Type 304) (2", 3", 4" No Hub Only)	$1581.00	P	Push on outlet (2", 3", 4")*	No Add
-30	PVC socket connection body* (2", 3", 4")	No Add	T	Threaded outlet (2", 3", 4")	$ 107.00
-31	PVC socket connection body* (2", 3", 4")	No Add	X	Inside caulk outlet (2", 3", 4")	No Add
-34	T-cone plug and gasket (2", 3", 4")(C1440 Series)	$ 477.00	-Z	Extended wide flange on body (13" dia. x 1/8" thick)	$ 1724.00

Specify POG-6 for C.I. pipe and POG-6-PVC for 6" PVC pipe. 2", 3", 4" sizes use same gasket.

C1100-UR FLOOR CLEANOUT WITH ROUND TOP AND TERRAZZO RECESS C1100-UR

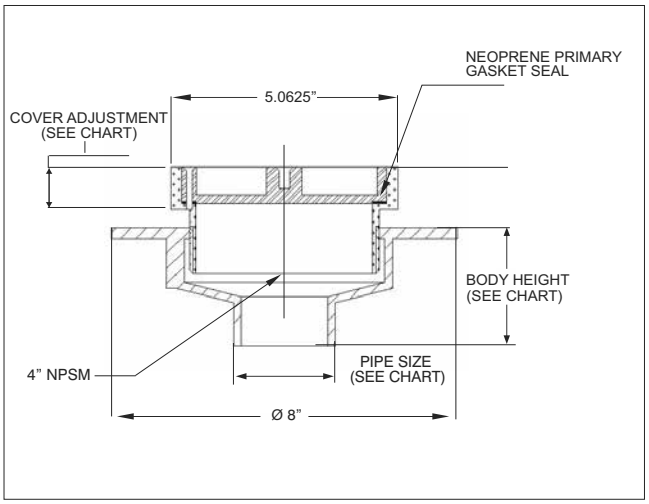

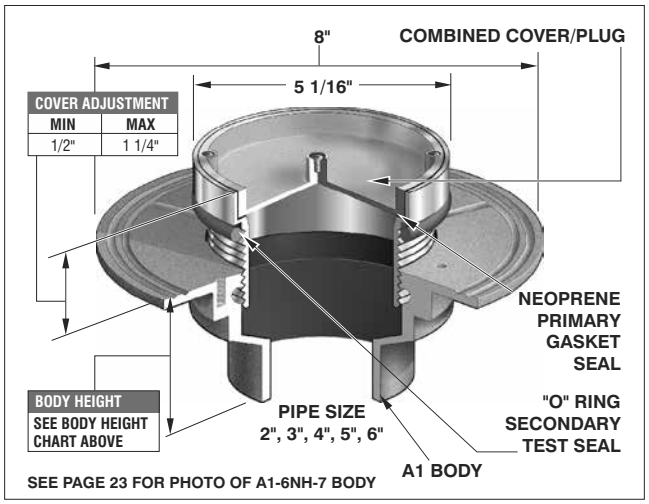

SEE PAGE 23 FOR PHOTO OF A1-6NH-7 BODY

C1100-UR FLOOR CLEANOUT WITH ROUND TOP AND TERRAZZO RECESS				
MODEL NUMBER	WT. Lbs	COVER DIAMETER	OUTLET SIZE	LACQUERED CAST IRON BODY WITH NB (-1) OR SS (-3)
C1102-UR	7.00	5" round	2"	$ 1275.00
C1103-UR	6.50	5" round	3"	$ 1319.00
C1104-UR	7.00	5" round	4"	$ 1610.00
C1105,6-UR	8.25	5" round	5", 6"	$ 2326.00

ANSI/ASME RATING	
COVER	LOAD RATING
5" DIA. NB	2000-4999 lbs
5" DIA SS	5000-7499 lbs

C1100 MEETS ANSI CLEANOUT STANDARD A112.36.2M-1991 (R2017)

PARTS

A1 BODY	UR-1 or -3

CLEANOUTS

CLEANOUTS

C1100-US FLOOR CLEANOUT WITH SQUARE TOP AND TERRAZZO RECESS C1100-US

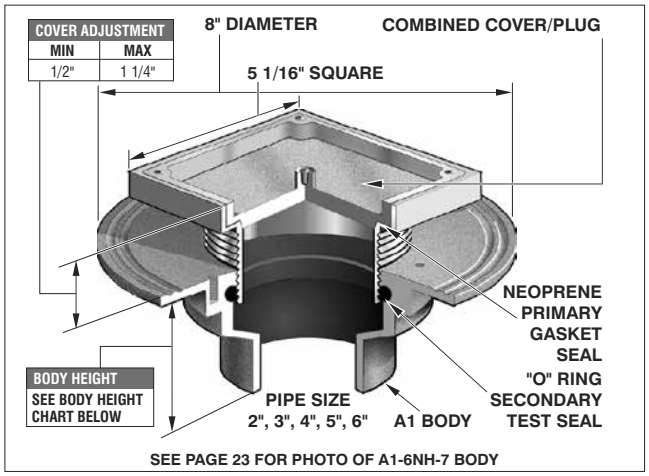

SEE PAGE 23 FOR PHOTO OF A1-6NH-7 BODY

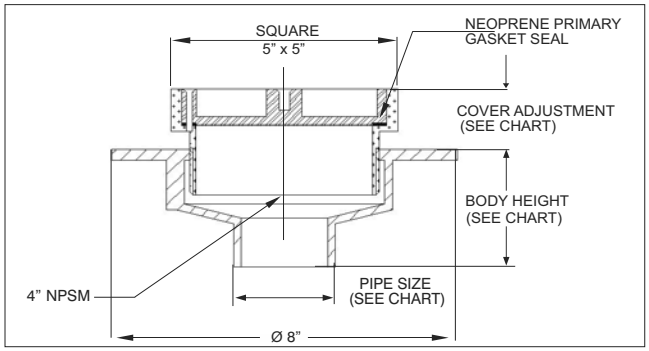

ANSI/ASME RATING	
COVER	LOAD RATING
5" x 5" NB	2000-4999 lbs
5" x 5" SS	5000-7499 lbs

PARTS

A1 BODY	US-1 or -3

C1100 MEETS ANSI CLEANOUT STANDARD A112.36.2M-1991 (R2017)

C1100-US FLOOR CLEANOUT WITH SQUARE TOP AND TERRAZZO RECESS

MODEL NUMBER	WT. Lbs	COVER SIZE	OUTLET SIZE	LACQUERED CAST IRON BODY WITH NB (-1) OR SS (-3)
C1102-US	8.75	5" x 5"	2"	$ 1275.00
C1103-US	8.00	5" x 5"	3"	$ 1319.00
C1104-US	8.75	5" x 5"	4"	$ 1610.00
C1105,6-US	10.00	5" x 5"	5", 6"	$ 2326.00

A1 BODY HEIGHT

PIPE SIZE	NO HUB (STANDARD)	PUSH ON (P)	THREADED (T)	INSIDE CAULK (X)	PVC (-30)	ABS (-31)
2"	3"	3 3/8"	2 1/4"	3 3/4"	2 5/8"	
3"	3"	3 3/8"	2 5/8"	3 3/4"	3 1/4"	
4"	3"	3 3/8"	2 5/8"	3 3/4"	3 1/2"	
5"	3"	-	2 5/8"	6 7/8"	-	
6"	3 1/2"	6 7/8"	-	-	-	

C1100-US, C1100-XR AND C1100-XS SERIES OPTIONAL VARIATIONS

SUFFIX	DESCRIPTION	LIST PRICE	SUFFIX	DESCRIPTION	LIST PRICE
-6	Security screws (TR25 Torx & pin) (H-1039A)	$ 96.00	-95	Client logo (-3 only)	$ 1175.00
-11	Acid resistant epoxy coated body	$ 459.00	-C	Membrane clamp (A1-C1)	$ 103.00
-13	Galvanized body	$ 292.00	-NH	No hub outlet	Standard
-28	Stainless steel body (Type 304) (2", 3", 4" No Hub Only)	$1581.00	P	Push on outlet (2", 3", 4")*	No Add
-30	PVC socket connection body* (2", 3", 4")	No Add	T	Threaded outlet (2", 3", 4")	$ 107.00
-31	PVC socket connection body* (2", 3", 4")	No Add	X	Inside caulk outlet (2", 3", 4")	No Add
-34	T-cone plug and gasket (2", 3", 4")(C1440 Series)	$ 477.00	-Z	Extended wide flange on body (13" dia. x 1/8" thick)	$ 1724.00

Specify POG-6 for C.I. pipe and POG-6-PVC for 6" PVC pipe. 2", 3", 4" sizes use same gasket.

C1100-XR FLOOR CLEANOUT WITH HEAVY DUTY ROUND TOP C1100-XR

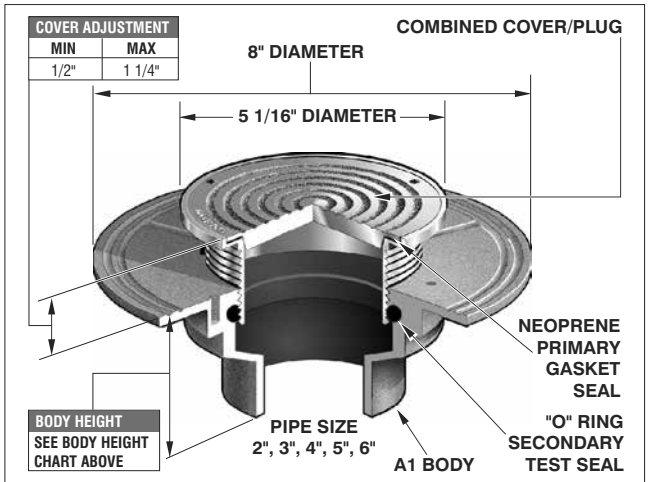

SEE PAGE 23 FOR PHOTO OF A1-6NH-7 BODY

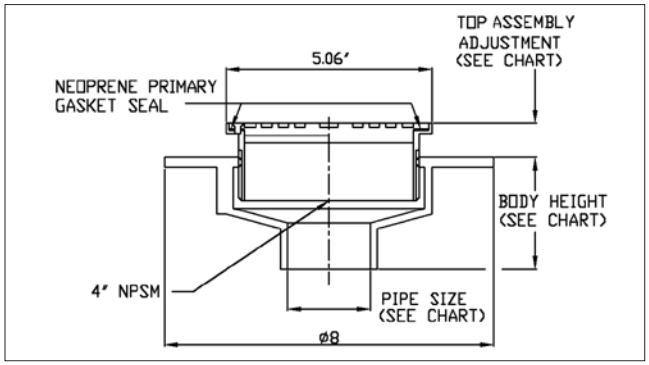

PARTS	A1 BODY	XR-1,3,4

C1100 MEETS ANSI CLEANOUT STANDARD A112.36.2M-1991 (R2017)

C1100-R FLOOR CLEANOUT WITH NICKEL BRONZE ROUND TOP

MODEL NUMBER	WT. Lbs	COVER SIZE	OUTLET SIZE	LACQUERED CAST IRON BODY WITH: DUCTILE IRON (-4)	NB (-1) OR SS (-3)
C1102-XR	6.75	5" Round	2"	$ 666.00	$ 1024.00
C1103-XR	6.25	5" Round	3"	$ 759.00	$ 1068.00
C1104-XR	6.75	5" Round	4"	$ 906.00	$ 1359.00
C1105,6-XR	8.00	5" Round	5", 6"	$ 1575.00	$ 2075.00

ANSI/ASME RATING	
COVER	LOAD RATING
5" DIA. NB	5000-7499 lbs
5" DIA. SS	5000-7499 lbs
5" DIA. DI	OVER 10,000 lbs

Design and dimensions are subject to modification. Prices do not include applicable taxes. Visit **www.mifab.com** for the most recent product information.
MIFAB®, Inc., 1321 West 119th Street, Chicago, Illinois 60643-5109, USA Toll Free: 1-800-465-2736 • Fax: 1-773-341-3049
All sales subject to MIFAB's® Terms & Warranties. Please refer to inside front cover. sales@mifab.com • Canada Toll Free: 1-800-387-3880

C1100-XS FLOOR CLEANOUT WITH HEAVY DUTY SQUARE TOP C1100-XS

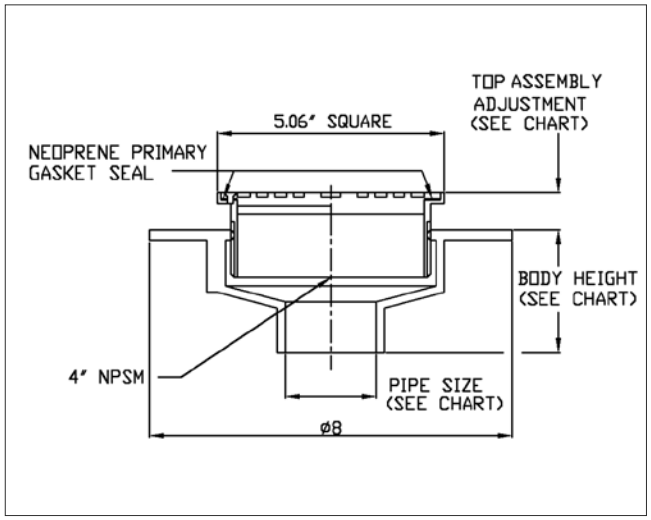

SEE PAGE 172 FOR C1100-XS OPTIONAL VARIATIONS

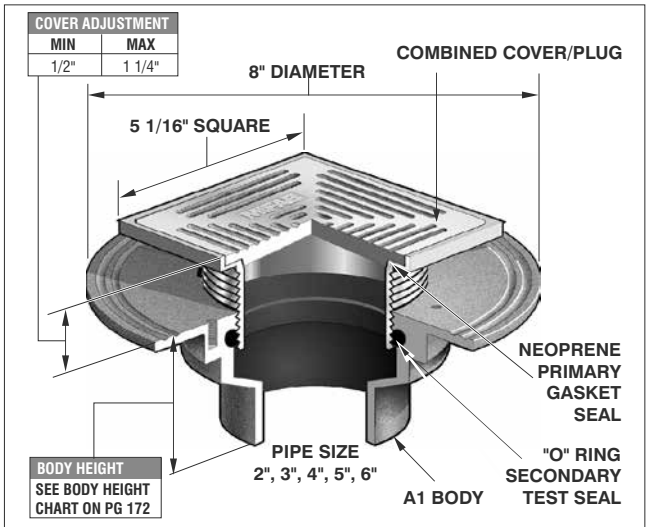

SEE PAGE 23 FOR PHOTO OF AI-6NH-7 BODY

C1100-XS FLOOR CLEANOUT WITH HEAVY DUTY SQUARE TOP				
MODEL NUMBER	WT. Lbs	COVER SIZE	OUTLET SIZE	LACQUERED CAST IRON BODY WITH NB (-1) OR SS (-3)
C1102-XS	7.25	5" x 5"	2"	$ 1024.00
C1103-XS	6.75	5" x 5"	3"	$ 1068.00
C1104-XS	7.25	5" x 5"	4"	$ 1359.00
C1105,6-XS	8.50	5" x 5"	5", 6"	$ 2075.00

ANSI/ASME RATING	
COVER	LOAD RATING
5" x 5" NB	2000-4999 lbs
5" x 5" SS	5000-7499 lbs

C1100 SERIES MEETS ANSI CLEANOUT STANDARD A112.36.2M-1991 (R2017)

PARTS

A1 BODY XS-1 or -3

C1200-C-R ISOLATION FLOOR CLEANOUT WITH ROUND TOP C1200-C-R

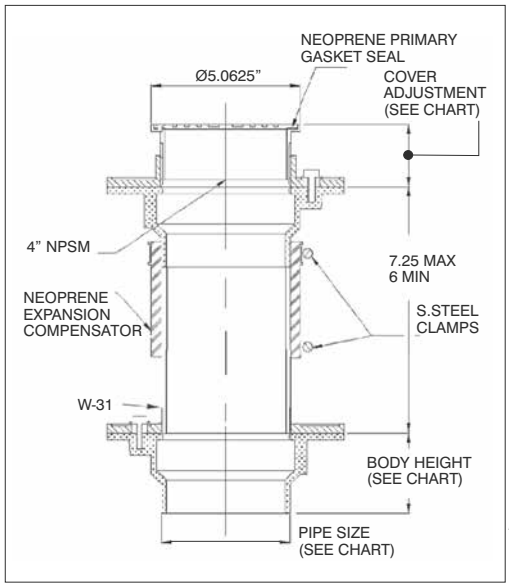

PARTS

R-(*) Select-R-1-3 or -4

MI-FLEX-400

W-31

C1100 MEETS ANSI CLEANOUT STANDARD A112.36.2M-1991 (R2017) SEE PAGE 174 FOR C1200-C-R OPTIONAL VARIATIONS

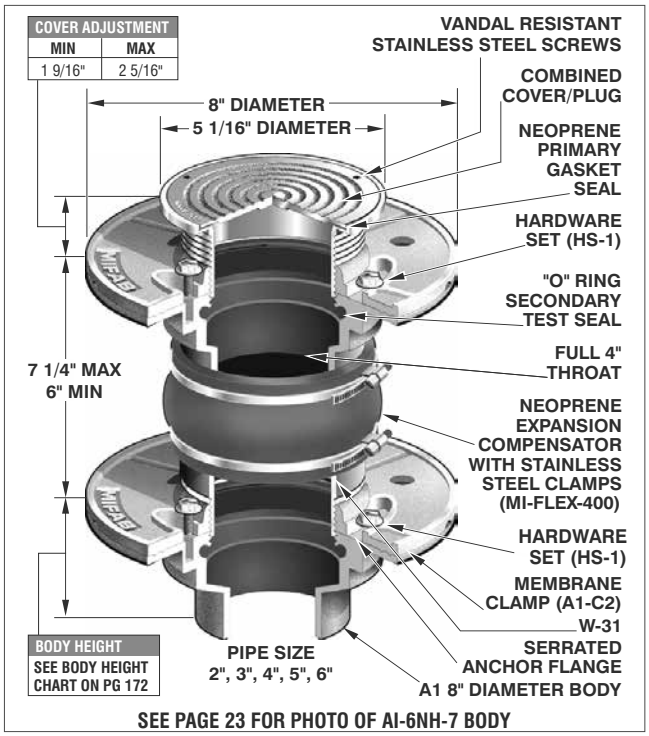

SEE PAGE 23 FOR PHOTO OF AI-6NH-7 BODY

HS-1

2 PIECES

A1-C2

2 PIECES

A1 BODY

1 PIECE

A1-4NH-7

1 PIECE

C1200-C-R ISOLATION FLOOR CLEANOUT WITH ROUND TOP					
MODEL NUMBER	WT. Lbs	COVER SIZE	OUTLET SIZE	LACQUERED CAST IRON BODY WITH: DUCTILE IRON (-4)	NB (-1) OR SS (-3)
C1202-C-R	16.75	5" Round	2"	$ 1851.00	$ 2227.00
C1203-C-R	16.00	5" Round	3"	$ 1851.00	$ 2227.00
C1204-C-R	16.75	5" Round	4"	$ 1851.00	$ 2227.00
C1205,6-C-R	18.00	5" Round	5", 6"	$ 2569.00	$ 2945.00

ANSI/ASME RATING	
COVER	LOAD RATING
5" DIA. NB	2000-4999 lbs
5" DIA SS	5000-7499 lbs
5" DIA DI	OVER 10,000 lbs

C1200-C ISOLATION FLOOR CLEANOUT MODEL VARIATIONS C1200-C

C1200-RC

C1200-C-RC FLOOR CLEANOUT WITH ROUND TOP AND CARPET MARKER

MODEL NUMBER	WT. Lbs	COVER SIZE	OUTLET SIZE	LACQUERED CAST IRON BODY WITH NICKEL BRONZE (-1)
C1202-C-RC	16.75	5" Round	2"	$ 2334.00
C1203-C-RC	16.00	5" Round	3"	$ 2334.00
C1204-C-RC	16.75	5" Round	4"	$ 2334.00
C1205,6-C-RC	16.75	5" Round	5", 6"	$ 3052.00

C1200-S
*Add **$246.00** per outlet size for 6" x 6" NB (-1) or SS (-3) top

C1200-C-S FLOOR CLEANOUT WITH SQUARE TOP

MODEL NUMBER	WT. Lbs	COVER SIZE	OUTLET SIZE	LACQUERED CAST IRON BODY WITH NICKEL BRONZE (-1) OR STAINLESS STEEL (-3)
C1202-C-S	17.50	5" x 5"	2"	$ 2227.00
C1203-C-S	16.75	5" x 5"	3"	$ 2227.00
C1204-C-S	17.50	5" x 5"	4"	$ 2227.00
C1205,6-C-S	17.75	5" x 5"	5", 6"	$ 2945.00

C1200-T

C1200-C-T FLOOR CLEANOUT WITH ROUND TOP AND TILE RECESS

MODEL NUMBER	WT. Lbs	COVER SIZE	OUTLET SIZE	LACQUERED CAST IRON BODY WITH NICKEL BRONZE (-1) OR STAINLESS STEEL (-3)
C1202-C-T	16.75	5" Round	2"	$ 2227.00
C1203-C-T	16.75	5" Round	3"	$ 2227.00
C1204-C-T	16.75	5" Round	4"	$ 2227.00
C1205,6-C-T	16.75	5" Round	5", 6"	$ 2945.00

C1200-TS

C1200-C-TS FLOOR CLEANOUT WITH SQUARE TOP AND TILE RECESS

MODEL NUMBER	WT. Lbs	COVER SIZE	OUTLET SIZE	LACQUERED CAST IRON BODY WITH NICKEL BRONZE (-1) OR STAINLESS STEEL (-3)
C1202-C-TS	17.25	5" x 5"	2"	$ 2227.00
C1203-C-TS	16.75	5" x 5"	3"	$ 2227.00
C1204-C-TS	17.25	5" x 5"	4"	$ 2227.00
C1205,6-C-TS	17.75	5" x 5"	5", 6"	$ 2945.00

C1200-UR

C1200-C-UR FLOOR CLEANOUT WITH ROUND TOP AND TERRAZZO RECESS

MODEL NUMBER	WT. Lbs	COVER SIZE	OUTLET SIZE	LACQUERED CAST IRON BODY WITH NICKEL BRONZE (-1) OR STAINLESS STEEL (-3)
C1202-C-UR	17.25	5" Round	2"	$ 2686.00
C1203-C-UR	17.00	5" Round	3"	$ 2686.00
C1204-C-UR	17.50	5" Round	4"	$ 2686.00
C1205,6-C-UR	17.75	5" Round	5", 6"	$ 3404.00

C1200-US

C1200-C-US FLOOR CLEANOUT WITH SQUARE TOP AND TERRAZZO RECESS

MODEL NUMBER	WT. Lbs	COVER SIZE	OUTLET SIZE	LACQUERED CAST IRON BODY WITH NICKEL BRONZE (-1) OR STAINLESS STEEL (-3)
C1202-C-US	19.25	5" x 5"	2"	$ 2686.00
C1203-C-US	18.75	5" x 5"	3"	$ 2686.00
C1204-C-US	19.25	5" x 5"	4"	$ 2686.00
C1205,6-C-US	19.75	5" x 5"	5", 6"	$ 3404.00

C1200-XR

C1200-C-XR FLOOR CLEANOUT WITH HEAVY DUTY ROUND TOP

MODEL NUMBER	WT. Lbs	COVER SIZE	OUTLET SIZE	LACQUERED CAST IRON BODY WITH: DUCTILE IRON (-4)	NB (-1) OR SS (-3)
C1202-C-XR	16.75	5" Round	2"	$ 1851.00	$ 2435.00
C1203-C-XR	16.25	5" Round	3"	$ 1851.00	$ 2435.00
C1204-C-XR	16.75	5" Round	4"	$ 1851.00	$ 2435.00
C1205,6-C-XR	16.75	5" Round	5", 6"	$ 2569.00	$ 3153.00

*Specify POG-6 for C.I. pipe and POG-6-PVC for PVC pipe. 2", 3", 4" sizes use same gasket.

C1200-C OPTIONAL VARIATIONS:

SUFFIX	DESCRIPTION	LIST PRICE	SUFFIX	DESCRIPTION	LIST PRICE
-4	Ductile iron top assembly	See above	-34	T-cone plug and gasket (C1440 Series)	$ 477.00
-6	Security screws (TR25 Torx and pin) (H-1039A)	$ 96.00	-95	Client logo (-3 only)	$ 1175.00
-11	All acid resistant epoxy coated	$ 1325.00	NH	No hub outlet (2", 3", 4")	Standard
-13	All galvanized	$ 1325.00	P	Push on outlet (2", 3", 4")*	No Add
-28	All 304 Stainless steel bodies (2",3",4" No Hub Only)	$ 3162.00	T	Threaded outlet (2", 3", 4")	$ 107.00
-30	PVC socket connection body* (2",3",4")	No Add	X	Inside caulk outlet (2", 3", 4")	No Add
-31	ABS socket connection body* (2",3",4")	No Add			

Design and dimensions are subject to modification. Prices do not include applicable taxes. Visit **www.mifab.com** for the most recent product information.
MIFAB®, Inc., 1321 West 119th Street, Chicago, Illinois 60643-5109, USA
Toll Free: 1-800-465-2736 • Fax: 1-773-341-3049
sales@mifab.com • Canada Toll Free: 1-800-387-3880
All sales subject to MIFAB's® Terms & Warranties. Please refer to inside front cover.

C1222,3,4 FERRULE CLEANOUT WITH ADJUSTABLE TOP & SECONDARY PLUG C1222,3,4

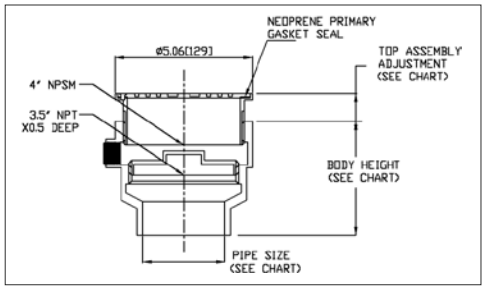

PARTS

R-(*)

A4 BODY

ANSI/ASME RATING	
COVER	LOAD RATING
5" DIA. NB	2000-4999 lbs
5" DIA. SS	5000-7499 lbs
5" DIA. DI	OVER 10,000 lbs

(*) Denotes strainer finish (-1, -3 or -4)

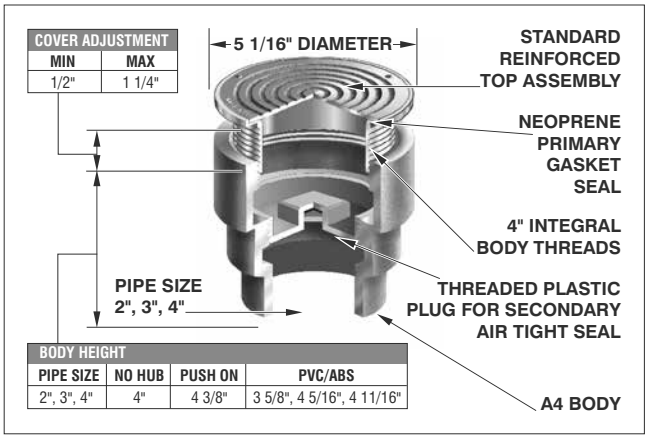

COVER ADJUSTMENT	
MIN	MAX
1/2"	1 1/4"

BODY HEIGHT			
PIPE SIZE	NO HUB	PUSH ON	PVC/ABS
2", 3", 4"	4"	4 3/8"	3 5/8", 4 5/16", 4 11/16"

C1222,3,4 FERRULE CLEANOUT WITH ADJUSTABLE TOP AND SECONDARY PLUG

MODEL NUMBER	WT. Lbs	DESCRIPTION	NO HUB OUTLET SIZE	LACQUERED CAST IRON BODY WITH: DUCTILE IRON (-4)	NB (-1) OR SS (-3)
C1222,3,4-R	5.65	5" Round top	2", 3", 4"	$ 906.00	$ 1151.00
C1222,3,4-RC	5.65	5" Round top with SS carpet marker	2", 3", 4"	$1013.00	$ 1151.00
C1222,3,4-RFC7	6.50	7" Round top with clamping flange	2", 3", 4"	-	$ 1190.00*
C1222,3,4-S	5.65	5" square top	2", 3", 4"	-	$ 1151.00
C1222,3,4-T	5.65	5" Round top with tile recess	2", 3", 4"	-	$ 1151.00
C1222,3,4-TS	5.65	5" Square top with tile recess	2", 3", 4"	-	$ 1151.00
C1222,3,4-UR	5.65	5" Round top with terrazzo recess	2", 3", 4"	-	$ 1610.00
C1222,3,4-US	5.65	5" Square top with terrazzo recess	2", 3", 4"	-	$ 1610.00
C1222,3,4-XR	5.65	5" Heavy duty round top	2", 3", 4"	$ 906.00	$ 1359.00
C1222,3,4-XS	5.65	5" Heavy duty square top	2", 3", 4"		$ 1359.00

*RFC9 IN STAINLESS STEEL ONLY; **$1531.00** LIST PRICE FOR 2", 3", 4"; **$2592.00.00** LIST PRICE FOR 6" SIZE

C1222,3,4 OPTIONAL VARIATIONS:

SUFFIX	DESCRIPTION	LIST PRICE	SUFFIX	DESCRIPTION	LIST PRICE
-6	Security screws (TR25 Torx & pin) (H-1039A)	$ 96.00	-31	ABS socket connection body*	No Add
-11	All acid resistant epoxy coated	$ 459.00	-34B	Brass closure plug (A4-34B)	$ 255.00
-13	All galvanized	$ 292.00	-95	Client logo (-3 only)	$ 1175.00
-30	PVC socket connection body*	No Add	P	Push on outlet (2", 3", 4") *2", 3", 4" socket connections only	No Add

C1226,8 FERRULE CLEANOUT WITH ADJUSTABLE TOP & SECONDARY PLUG C1226,8

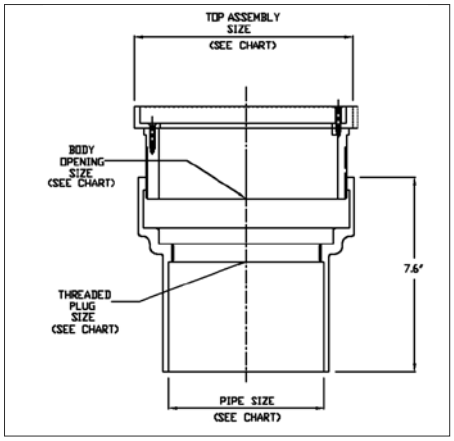

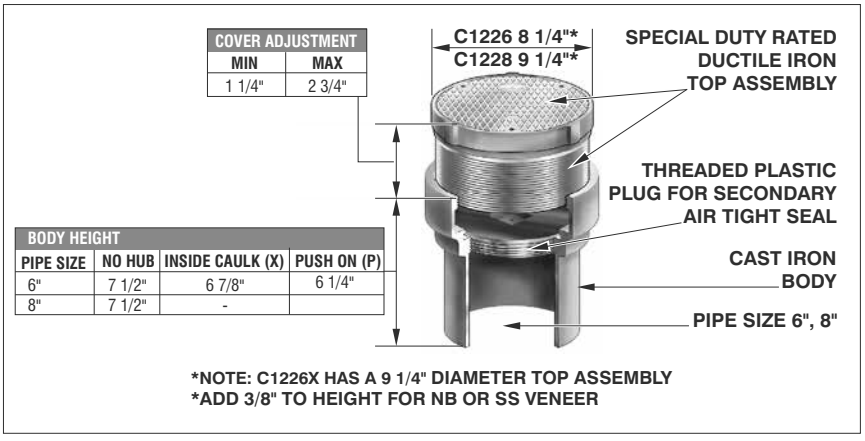

COVER ADJUSTMENT	
MIN	MAX
1 1/4"	2 3/4"

BODY HEIGHT			
PIPE SIZE	NO HUB	INSIDE CAULK (X)	PUSH ON (P)
6"	7 1/2"	6 7/8"	6 1/4"
8"	7 1/2"	-	

*NOTE: C1226X HAS A 9 1/4" DIAMETER TOP ASSEMBLY
*ADD 3/8" TO HEIGHT FOR NB OR SS VENEER

C1226,8 FERRULE CLEANOUT WITH ADJUSTABLE TOP AND SECONDARY PLUG

MODEL NUMBER	WT. Lbs	OUTLET SIZE	LACQUERED CAST IRON BODY WITH: DUCTILE IRON (-4)	NB (-1) OR SS (-3)
C1226	20.00	6"	$ 1575.00	$ 1867.00
C1228	25.00	8"	$ 1867.00	$ 2134.00

ANSI/ASME RATING	
COVER	LOAD RATING
6", 8" DIAMETER NB	2,000 - 4,999 lbs
6", 8" DIAMETER SS	5,000 - 7,499 lbs
6", 8" DIAMETER DI	OVER 10,000 lbs

C1226,8 OPTIONAL VARIATIONS:

SUFFIX	DESCRIPTION	LIST PRICE	SUFFIX	DESCRIPTION	LIST PRICE
-6	Security screws (TR25 Torx and pin) (H-1039A)	$ 96.00	-34B	Brass closure plug (C122 (6 or 8)-PP-81)	$ 801.00
-11	All acid resistant epoxy coated	$ 459.00	-95	Client logo (-3 only)	$ 1175.00
-13	All galvanized	$ 292.00	P	Push on outlet (6" only)	No Add
			X	Inside caulk outlet (6" only)	No Add

CLEANOUTS

C1230 LINE OR FLOOR CLEANOUT C1230

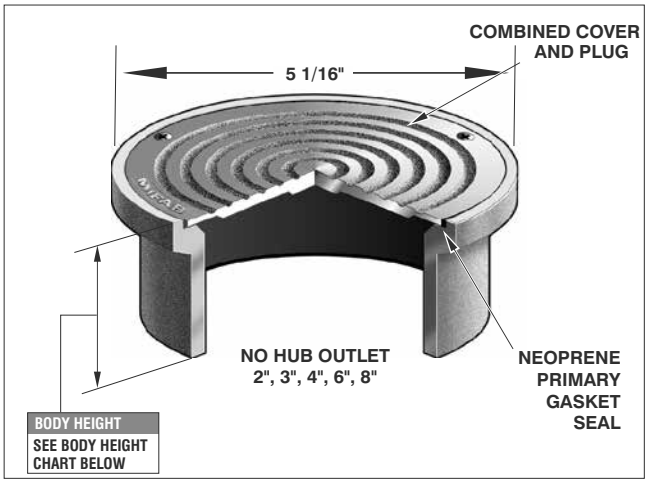

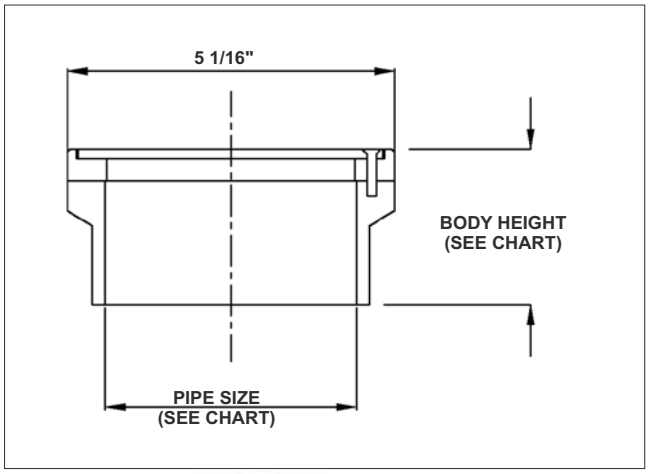

C1230 LINE OR FLOOR CLEANOUT

MODEL NUMBER	WT. Lbs	DESCRIPTION	LIST PRICE	ADD FOR NICKEL BRONZE COVER (-1)
C1232-4	4.75	2" C.I. body with ductile iron cover	$ 138.00	-
C1233-4	4.75	3" C.I. body with ductile iron cover	$ 208.00	-
C1234-4	5.25	4" C.I. body with ductile iron cover	$ 286.00	-
C1234P-4	6.00	4" C.I. body push on outlet body with D.I. cover	$ 286.00	-
C1236-4	6.00	6" C.I. body with ductile iron cover	$ 580.00	-
C1238-4	7.00	8" C.I. body with ductile iron cover	$ 1076.00	-
C1232-1	4.75	2" NB body with NB cover	$ 393.00	-
C1233-1	4.75	3" NB body with NB cover	$ 463.00	-
C1234-1	5.25	4" NB body with NB cover	$ 541.00	-
C1232-30	4.75	2" PVC body with ductile iron cover	$ 138.00	$ 255.00
C1233-30	3.25	3" PVC body with ductile iron cover	$ 208.00	$ 255.00
C1234-30	3.50	4" PVC body with ductile iron cover	$ 286.00	$ 255.00
C1232-31	3.25	2" ABS body with ductile iron cover	$ 138.00	$ 255.00
C1233-31	3.25	3" ABS body with ductile iron cover	$ 208.00	$ 255.00
C1234-31	3.50	4" ABS body with ductile iron cover	$ 286.00	$ 255.00

C1230-30-1

BODY HEIGHT

PIPE SIZE	NB/CI	PVC/ABS
2", 3"	2 3/16"	2 5/8"
4"	2 3/16"	2 5/8"
6", 8"	3 1/2"	N/A

ANSI/ASME RATING

COVER	LOAD RATING
5" DIAMETER NB	2000 - 4999 lbs
5" DIAMETER DI	OVER 10,000 lbs

C1230 OPTIONAL VARIATIONS:

SUFFIX	DESCRIPTION	LIST PRICE
-6	Security screws (TR25 Torx & pin) (H-1039A)	$ 96.00
-11	All acid resistant epoxy coated	$ 208.00
-13	All galvanized	$ 208.00
-34	T-cone plug and gasket (C1440 Series)	$ 477.00
P	Push on outlet (2", 3", 4")	No Add

C1230-WF FLOOR CLEANOUT FOR WOOD FLOOR INSTALLATIONS C1230-WF

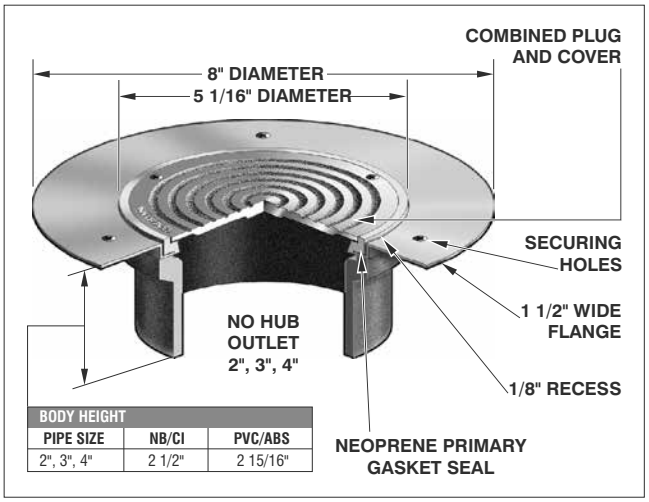

BODY HEIGHT

PIPE SIZE	NB/CI	PVC/ABS
2", 3", 4"	2 1/2"	2 15/16"

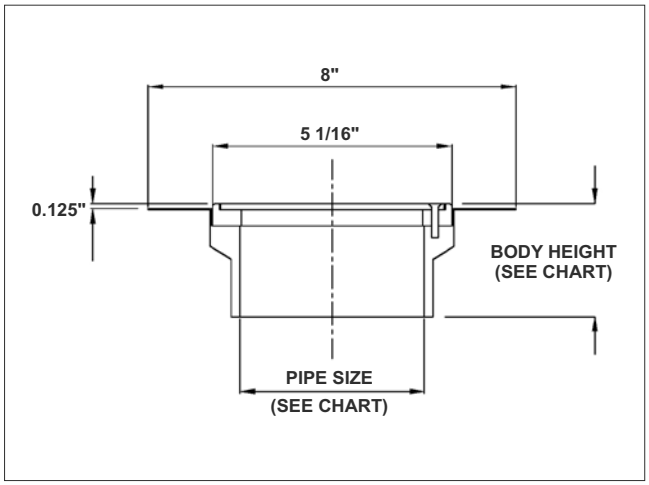

C1230-WF FLOOR CLEANOUT FOR WOOD FLOOR INSTALLATIONS

MODEL NUMBER	WT. Lbs	DESCRIPTION	LIST PRICE	ADD FOR NICKEL BRONZE COVER (-1)
C1232,3-WF-4	4.75	2",3" C.I. body w/ductile iron cover	$ 665.00	-
C1234-WF-4	5.25	4" C.I. body with ductile iron cover	$ 905.00	-
C1232,3-WF-30	3.25	2",3" PVC body w/ductile iron cover	$ 665.00	$ 255.00
C1234-WF-30	3.50	4" PVC body w/ductile iron cover	$ 905.00	$ 255.00
C1232,3-WF-31	3.25	2",3" ABS body w/ductile iron cover	$ 665.00	$ 255.00
C1234-WF-31	3.50	4" ABS body with ductile iron cover	$ 905.00	$ 255.00

ANSI/ASME RATING

COVER	LOAD RATING
5" DIAMETER NB	2000 - 4999 lbs
5" DIAMETER DI	OVER 10,000 lbs

C1230-WF OPTIONAL VARIATIONS:

SUFFIX	DESCRIPTION	LIST PRICE
-6	Security screws (TR25 Torx and pin) (H-1039A)	$ 96.00
-11	All acid resistant epoxy coated	$ 208.00
-13	All galvanized	$ 208.00

Design and dimensions are subject to modification. Prices do not include applicable taxes. Visit **www.mifab.com** for the most recent product information.
MIFAB®, Inc., 1321 West 119th Street, Chicago, Illinois 60643-5109, USA Toll Free: 1-800-465-2736 • Fax: 1-773-341-3049
All sales subject to MIFAB's® Terms & Warranties. Please refer to inside front cover. sales@mifab.com • Canada Toll Free: 1-800-387-3880

C1300 SCORIATED ACCESS COVERS

C1300

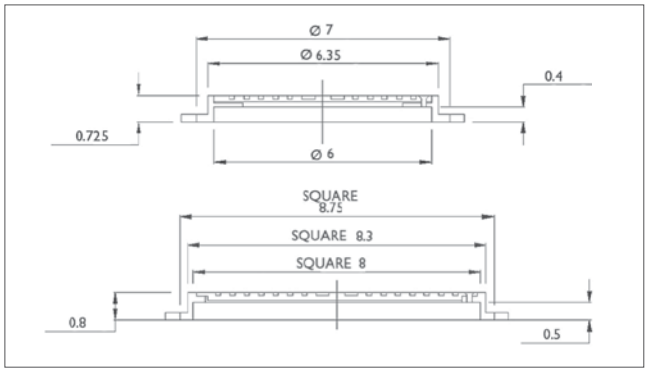

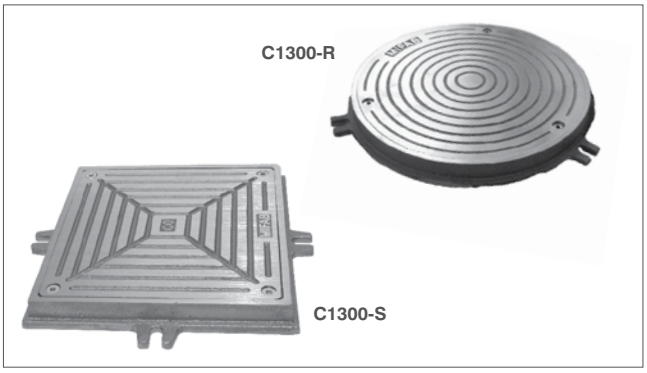

C1300 SCORIATED ACCESS COVERS				
MODEL NUMBER	WT. Lbs	DESCRIPTION	NICKEL BRONZE (-1)	DUCTILE IRON (-4)
C1300-R6	9.00	6" Round scoriated access cover	$ 485.00	-
C1300-R9	10.00	9" Round scoriated access cover	$ 1217.00	-
C1300-S7	11.00	7" x 7" scoriated access cover	$ 833.00	-
C1300-S9	12.00	9" x 9" scoriated access cover	$ 1219.00	$ 652.00
C1300-S12	12.00	12" x 12" scoriated access cover	$ 1898.00	$ 1042.00

C1300 OPTIONAL VARIATIONS:		
SUFFIX	DESCRIPTION	LIST PRICE
-6	Security screws (TR25 Torx and pin)(H-1039A)	$ 96.00

C1300-UR/US ACCESS COVER RECESSED FOR TERRAZZO

C1300-UR/US

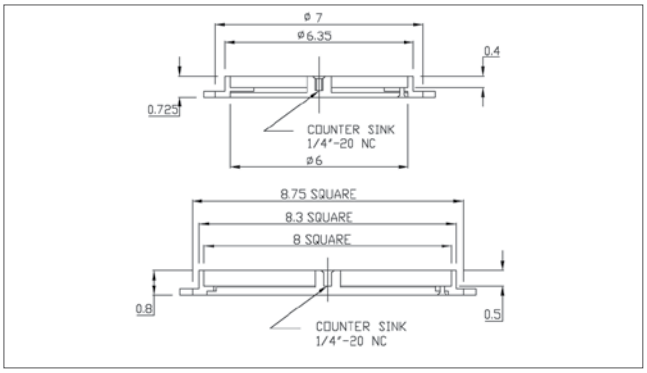

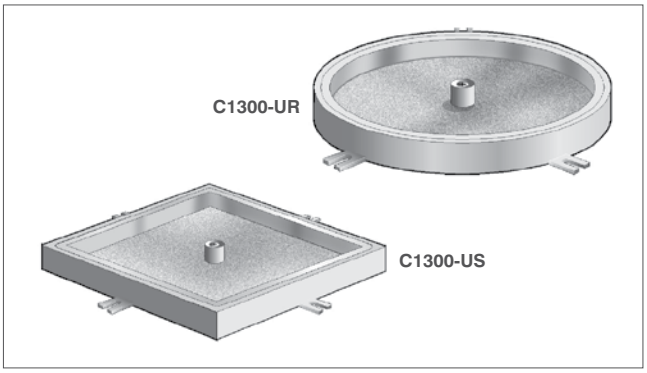

C1300-UR OR US ACCESS COVER RECESSED FOR TERRAZZO			
MODEL NUMBER	WT. Lbs	DESCRIPTION	NICKEL BRONZE (-1)
C1300-UR	9.00	9" Round terrazzo recessed access cover	$ 1445.00
C1300-US	11.00	8" x 8" terrazzo recessed access cover	$ 1445.00

C1300-UR & US OPTIONAL VARIATIONS:		
SUFFIX	DESCRIPTION	LIST PRICE
-6	Security screws (TR25 Torx and pin)(H-1039A)	$ 96.00

C1310 FLOOR ACCESS COVER

C1310

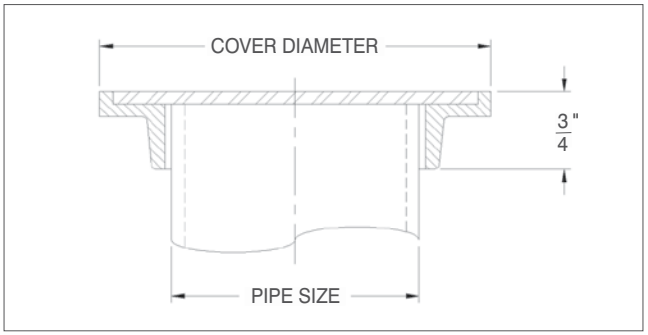

AVAILABLE FOR:
2", 3", 4" OR 6" PIPE SIZES

C1310 FLOOR ACCESS COVER				
MODEL NUMBER	WT. Lbs	DESCRIPTION	PIPE SIZE	NICKEL BRONZE (-1)
C1312	4.00	3 5/8" Diameter scoriated access cover	2"	$ 629.00
C1313	4.00	5 1/8" Diameter scoriated access cover	3"	$ 1663.00
C1314	5.00	5 7/8" Diameter scoriated access cover	4"	$ 1883.00
C1316	8.00	8" Diameter scoriated access cover	6"	$ 2696.00

C1310 OPTIONAL VARIATIONS:		
SUFFIX	DESCRIPTION	LIST PRICE
-6	Security screws (TR25 Torx and pin)(H-1039A)	$ 96.00

NOTE: If a cleanout is required, use MIFAB C1230

CLEANOUTS

C1300-MF HEAVY DUTY CLEANOUT ACCESS HOUSING WITH ANCHOR FLANGE C1300-MF

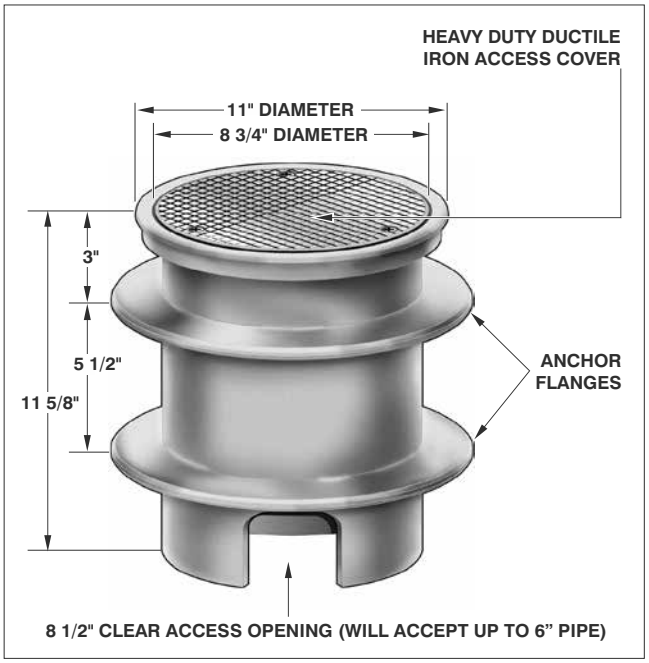

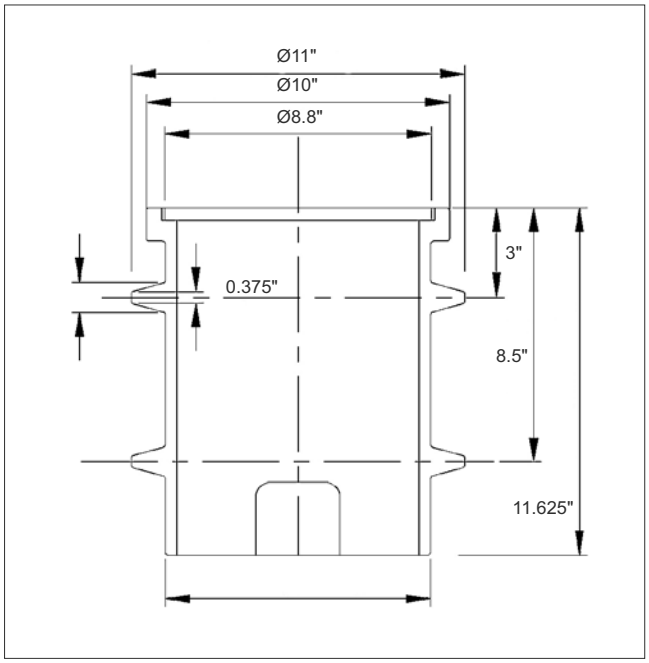

NOTE: IF A CLEANOUT IS REQUIRED, USE MIFAB C1230 (See page 176)

C1300-MF HEAVY DUTY CLEANOUT ACCESS HOUSING WITH ANCHOR FLANGE

MODEL NUMBER	WT. Lbs	DESCRIPTION	DUCTILE IRON (-4)	STAINLESS STEEL (VENEER) (-3)
C1300-MF	40.00	Heavy duty cleanout access housing	$ 1811.00	$ 2607.00

C1300-MF OPTIONAL VARIATIONS:

SUFFIX	DESCRIPTION	LIST PRICE
-6	Security screws (TR30 Torx and pin)	$ 129.00
-11	All acid resistant epoxy coated	$ 725.00
-13	All galvanized	$ 725.00

C1400 NICKEL BRONZE SMOOTH WALL ACCESS COVER C1400

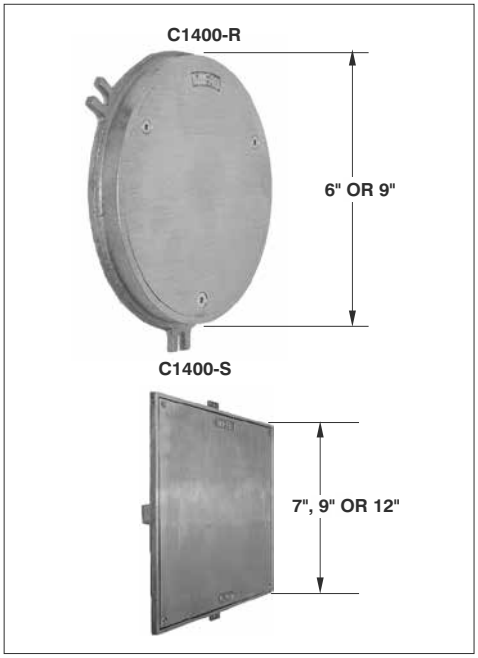

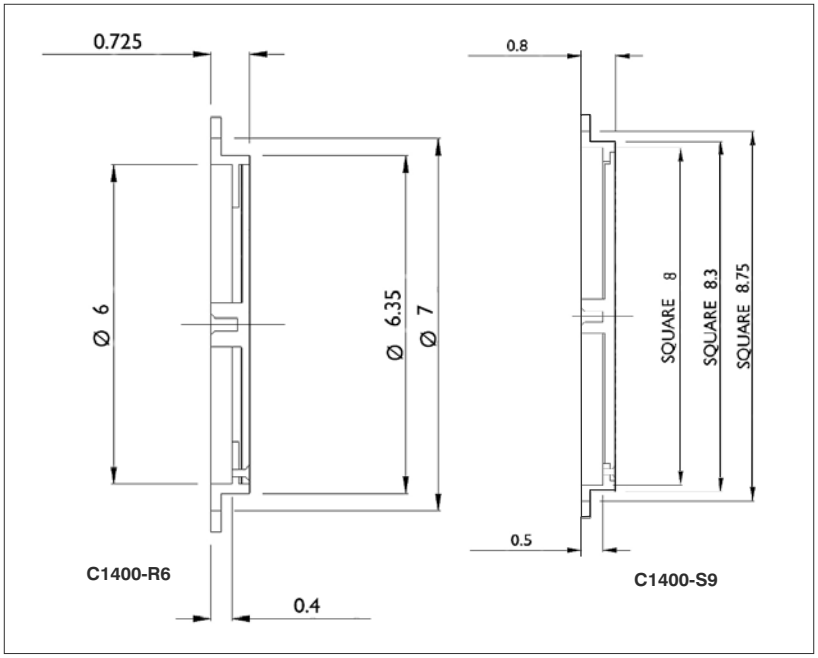

C1400 NICKEL BRONZE SMOOTH WALL ACCESS COVER

MODEL NUMBER	WT. Lbs	COVER SIZE	LIST PRICE
C1400-R6-1	9.00	6" Round	$ 485.00
C1400-R9-1	10.00	9" Round	$ 1217.00
C1400-S7-1	11.00	7" x 7"	$ 833.00
C1400-S9-1	12.00	9" x 9"	$ 1217.00
C1400-S12-1	16.00	12" x 12"	$ 1422.00

C1400 OPTIONAL VARIATIONS:

SUFFIX	DESCRIPTION	LIST PRICE
-3	Stainless Steel access cover	$ 1055.00
-6	Security screws (TR25 Torx and pin) (H-1039A)	$ 96.00
-95	Client logo	$ 1175.00

C1400-RD STAINLESS STEEL ROUND SMOOTH ACCESS COVER WITH SCREW C1400-RD

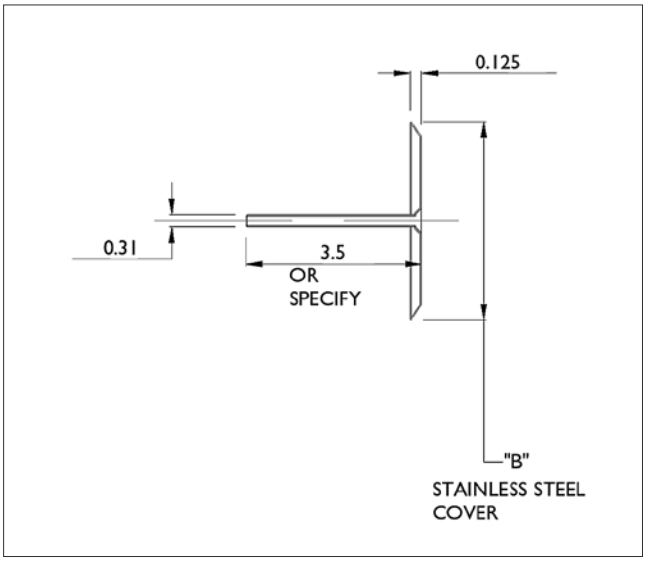

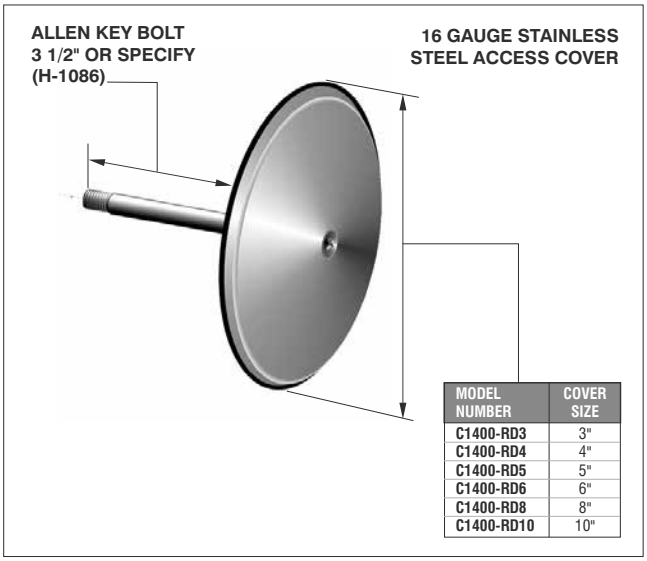

MODEL NUMBER	COVER SIZE
C1400-RD3	3"
C1400-RD4	4"
C1400-RD5	5"
C1400-RD6	6"
C1400-RD8	8"
C1400-RD10	10"

C1400-RD STAINLESS STEEL ROUND SMOOTH ACCESS COVER W/SCREW

MODEL NUMBER	WT. Lbs	COVER DIAMETER	LIST PRICE
C1400-RD3	0.50	3"	$ 193.00
C1400-RD4	0.50	4"	$ 237.00
C1400-RD5	0.50	5"	$ 237.00
C1400-RD6	0.50	6"	$ 423.00
C1400-RD8	0.50	8"	$ 657.00
C1400-RD10	1.00	10"	$ 709.00

C1400-RD OPTIONAL VARIATIONS:

SUFFIX	DESCRIPTION	LIST PRICE
-6	Security screw (H-1086A)	$ 96.00
-11	White powder coated finish	$ 331.00
-87	Screw longer than 3 1/2", per inch	$ 28.50
-95	Client logo	$ 1175.00

C1430 C1430 BRONZE CLEANOUT PLUG ONLY C1430-RD ROUND STAINLESS STEEL SMOOTH ACCESS COVER WITH BRONZE CLEANOUT PLUG & SCREW C1430

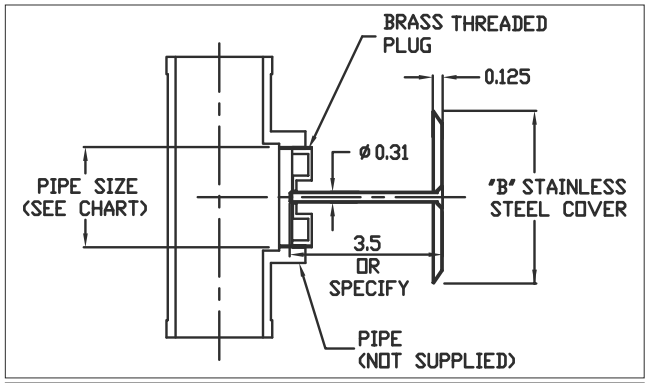

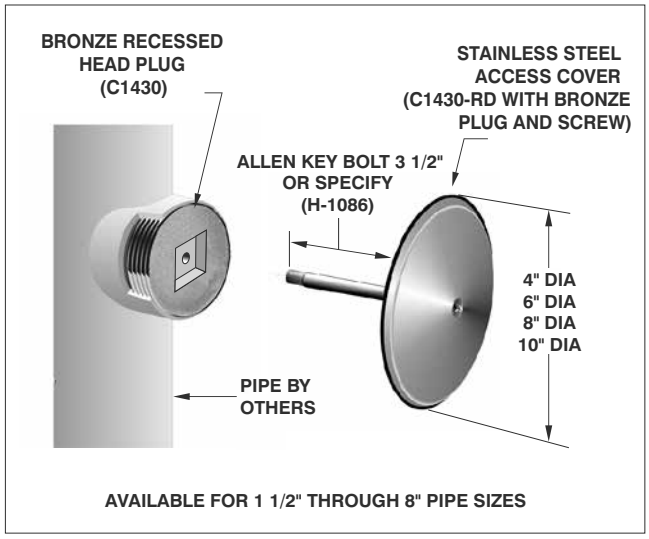

AVAILABLE FOR 1 1/2" THROUGH 8" PIPE SIZES

C1430-RD OPTIONAL VARIATIONS:

SUFFIX	DESCRIPTION	LIST PRICE
-6	Security screw (H-1086A)	$ 96.00
-11	White powder coated finish	$ 331.00
-87	Screw longer than 3 1/2", per inch	$ 26.50

C1430 BRONZE CLEANOUT PLUG ONLY
C1430-RD ROUND STAINLESS STEEL SMOOTH ACCESS COVER WITH BRONZE CLEANOUT PLUG AND SCREW

MODEL NUMBER	WT. Lbs	PIPE SIZE	LIST PRICE	MODEL NUMBER	WT. Lbs	PIPE SIZE	COVER DIAMETER	LIST PRICE
C1432	0.25	2"	$ 148.00	C1432-RD4	0.75	2"	4"	$ 269.00
C1433	0.50	3"	$ 257.00	C1433-RD4	1.25	3"	4"	$ 324.00
C1434	0.50	4"	$ 300.00	C1434-RD6	1.25	4"	6"	$ 423.00
C1435	0.75	5"	$ 686.00	C1435-RD6	1.50	5"	6"	$ 599.00
C1436	0.85	6"	$ 918.00	C1436-RD8	1.75	6"	8"	$ 910.00
C1438	1.25	8"	$ 1883.00	C1438-RD10	2.25	8"	10"	$ 1645.00

C1440 EXPANDABLE LINE CLEANOUT C1440

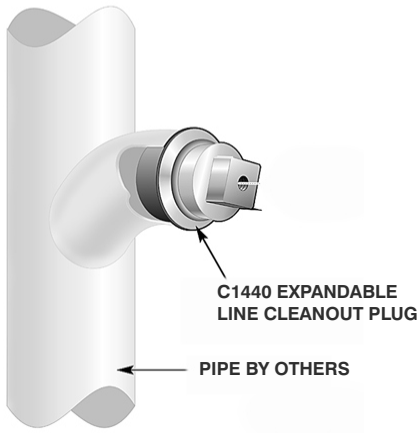

AVAILABLE FOR 1 1/2", 2", 3", 4" PIPE SIZES

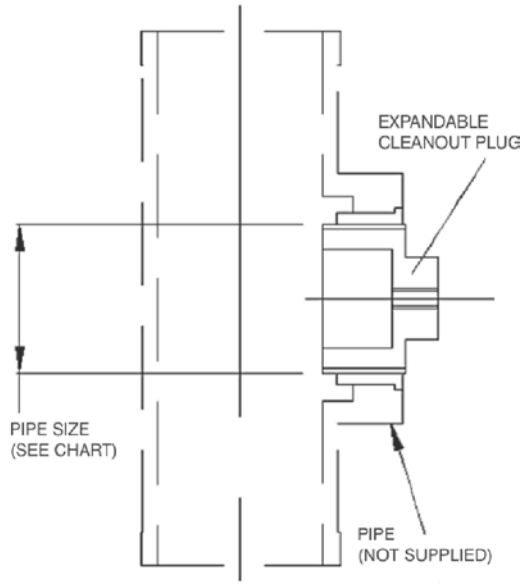

C1440 EXPANDABLE LINE CLEANOUT			
MODEL NUMBER	WT. Lbs	PIPE SIZE	LIST PRICE
C1441.5	0.50	1 1/2"	$ 477.00
C1442	0.50	2"	$ 477.00
C1443	0.75	3"	$ 477.00
C1444	1.00	4"	$ 477.00

C1440-R EXPANDABLE LINE CLEANOUT WITH ROUND NICKEL BRONZE WALL ACCESS PANEL C1440-R

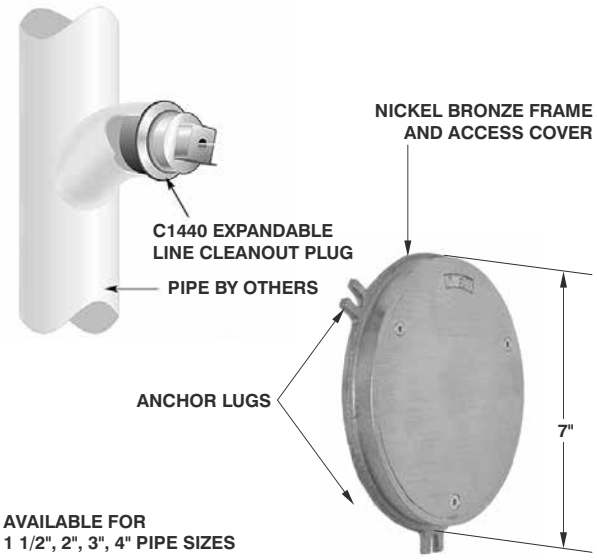

AVAILABLE FOR
1 1/2", 2", 3", 4" PIPE SIZES

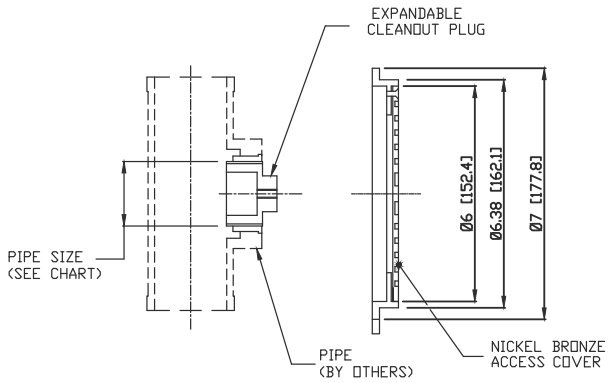

C1440-R EXPANDABLE LINE CLEANOUT WITH ROUND NICKEL BRONZE WALL ACCESS PANEL				
MODEL NUMBER	WT. Lbs	PIPE SIZE	COVER DIAMETER	LIST PRICE
C1441.5-R6-1	10.50	1 1/2"	6"	$ 962.00
C1442-R6-1	10.50	2"	6"	$ 962.00
C1443-R6-1	10.75	3"	6"	$ 962.00
C1444-R6-1	11.00	4"	6"	$ 962.00

C1440-R OPTIONAL VARIATIONS:		
SUFFIX	DESCRIPTION	LIST PRICE
-3	Stainless steel access cover	$ 1055.00
-6	Security screws (TR25 Torx and pin) (H-1039A)	$ 96.00
-95	Client logo	$ 1175.00

Design and dimensions are subject to modification. Prices do not include applicable taxes. Visit **www.mifab.com** for the most recent product information.
MIFAB®, Inc., 1321 West 119th Street, Chicago, Illinois 60643-5109, USA Toll Free: 1-800-465-2736 • Fax: 1-773-341-3049
All sales subject to MIFAB's® Terms & Warranties. Please refer to inside front cover. sales@mifab.com • Canada Toll Free: 1-800-387-3880

C1440-RD EXPANDABLE LINE CLEANOUT W/ROUND STAINLESS STEEL SMOOTH ACCESS COVER & SCREW C1440-RD

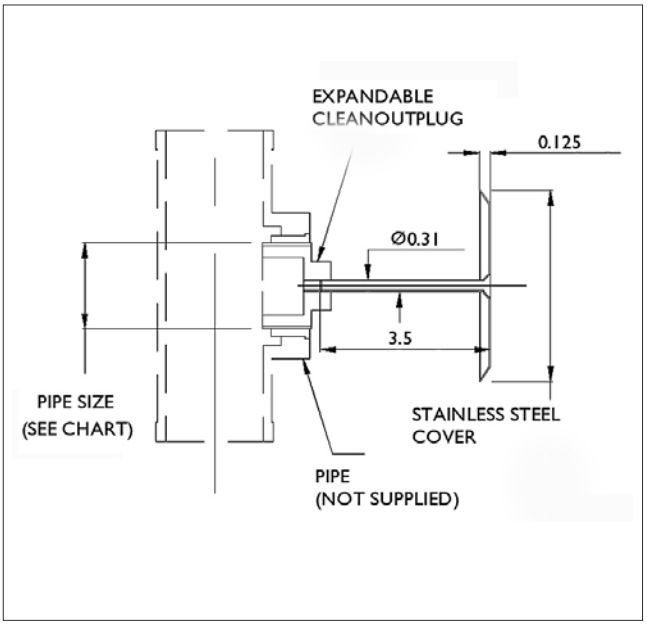

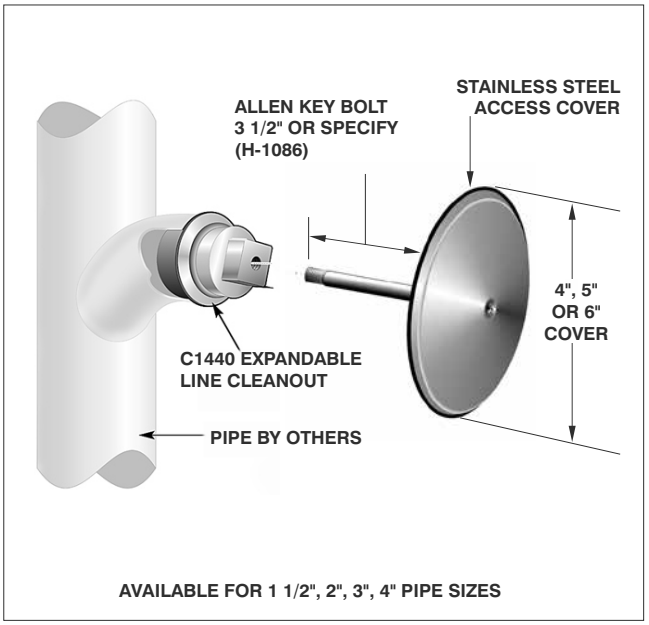

AVAILABLE FOR 1 1/2", 2", 3", 4" PIPE SIZES

C1440-RD EXPANDABLE LINE CLEANOUT WITH ROUND STAINLESS STEEL SMOOTH ACCESS COVER AND SCREW

MODEL NUMBER	WT. Lbs	PIPE SIZE	COVER DIAMETER	LIST PRICE
C1441.5-RD4	1.50	1 1/2"	4"	$ 714.00
C1442-RD4	1.50	2"	4"	$ 714.00
C1443-RD5	1.75	3"	5"	$ 714.00
C1444-RD6	2.00	4"	6"	$ 900.00

C1440-RD OPTIONAL VARIATIONS:

SUFFIX	DESCRIPTION	LIST PRICE
-6	Security screw (H-1086A)	$ 96.00
-11	White powder coated finish	$ 331.00
-87	Longer screw over 3 1/2", per inch	$ 28.50
-95	Client logo	$ 1175.00

C1440-S EXPANDABLE LINE CLEANOUT WITH SQUARE NICKEL BRONZE WALL ACCESS PANEL C1440-S

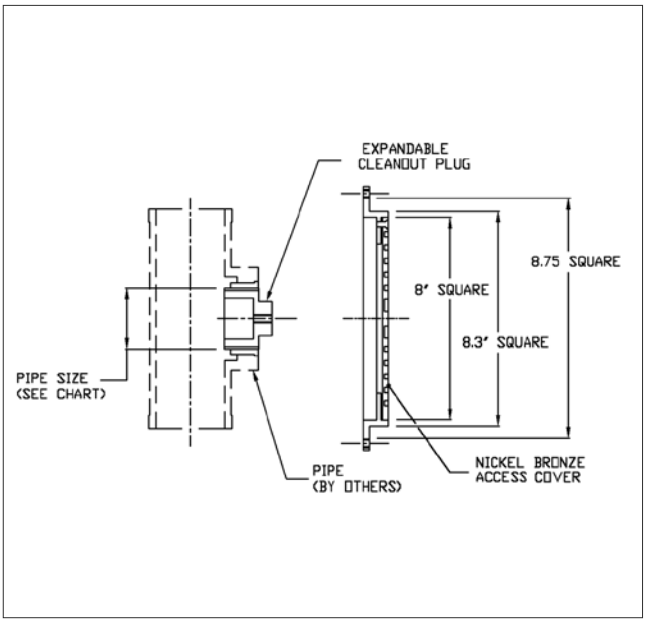

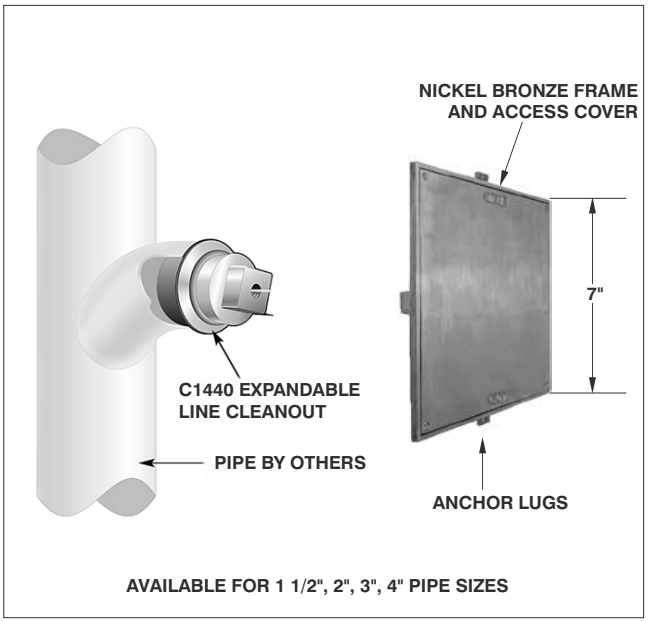

AVAILABLE FOR 1 1/2", 2", 3", 4" PIPE SIZES

C1440-S EXPANDABLE LINE CLEANOUT WITH SQUARE NICKEL BRONZE WALL ACCESS PANEL

MODEL NUMBER	WT. Lbs	PIPE SIZE	COVER SIZE	LIST PRICE
C1441.5-S7-1	12.50	1 1/2"	7" x 7"	$ 1309.00
C1442-S7-1	12.50	2"	7" x 7"	$ 1309.00
C1443-S7-1	12.75	3"	7" x 7"	$ 1309.00
C1444-S7-1	13.00	4"	7" x 7"	$ 1309.00

C1440-S OPTIONAL VARIATIONS:

SUFFIX	DESCRIPTION	LIST PRICE
-3	Stainless steel access cover	$ 1055.00
-6	Security screws (TR25 Torx and Pin) (H-1039A)	$ 96.00
-95	Client logo	$ 1175.00

C1450 LINE CLEANOUT C1450

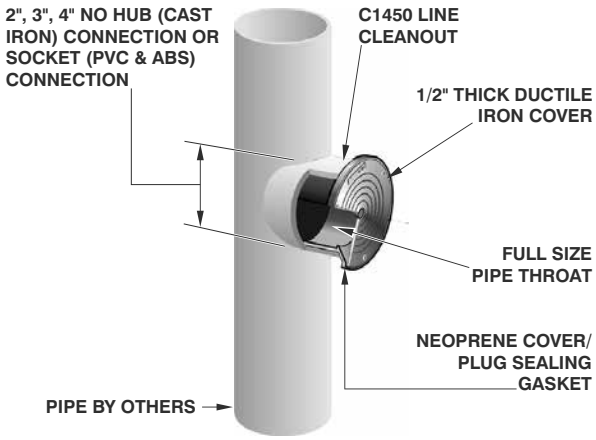

BODY HEIGHT		
PIPE SIZE	NB/CI	PVC/ABS
2", 3", 4"	2 3/16"	2 5/8"

AVAILABLE FOR 2", 3", 4" PIPE SIZES

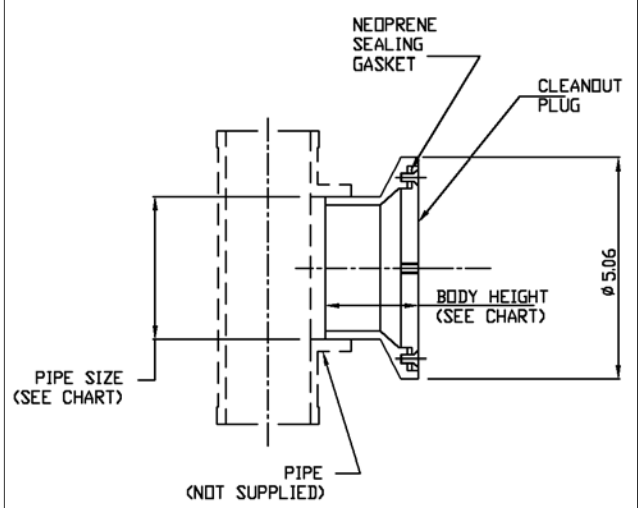

C1450 LINE CLEANOUT				
MODEL NUMBER	WT. Lbs	DESCRIPTION	LIST PRICE	ADD FOR NICKEL BRONZE COVER (-1)
C1452,3-1	4.75	2",3" NB body with NB cover	$ 463.00	-
C1454-1	5.25	4" NB body with NB cover	$ 463.00	-
C1452-4	4.25	2" C.I. body w/ductile iron cover	$ 138.00	-
C1453-4	4.75	3" C.I. body w/ductile iron cover	$ 208.00	-
C1454-4	5.25	4" C.I. body w/ductile iron cover	$ 286.00	-
C1452,3-30	3.25	2",3" PVC body w/ductile iron cover	$ 208.00	$ 255.00
C1454-30	3.50	4" PVC body w/ductile iron cover	$ 286.00	$ 255.00
C1452,3-31	3.25	2",3" ABS body w/ductile iron cover	$ 208.00	$ 255.00
C1454-31	3.50	4" ABS body w/ductile iron cover	$ 286.00	$ 255.00

C1450 OPTIONAL VARIATIONS:		
SUFFIX	DESCRIPTION	LIST PRICE
-6	Security screws (TR25 Torx and Pin)(H-1039A)	$ 96.00
-95	Client logo	$ 1175.00

C1450-R LINE CLEANOUT WITH ROUND NICKEL BRONZE WALL ACCESS PANEL C1450-R

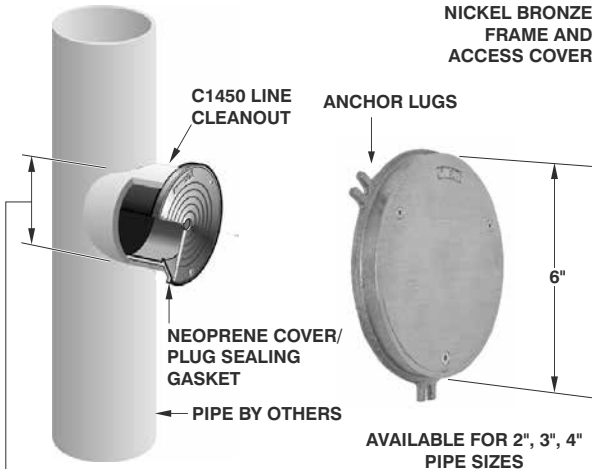

AVAILABLE FOR 2", 3", 4" PIPE SIZES

BODY HEIGHT		
PIPE SIZE	NB/CI	PVC/ABS
2", 3", 4"	2 3/16"	2 5/8"

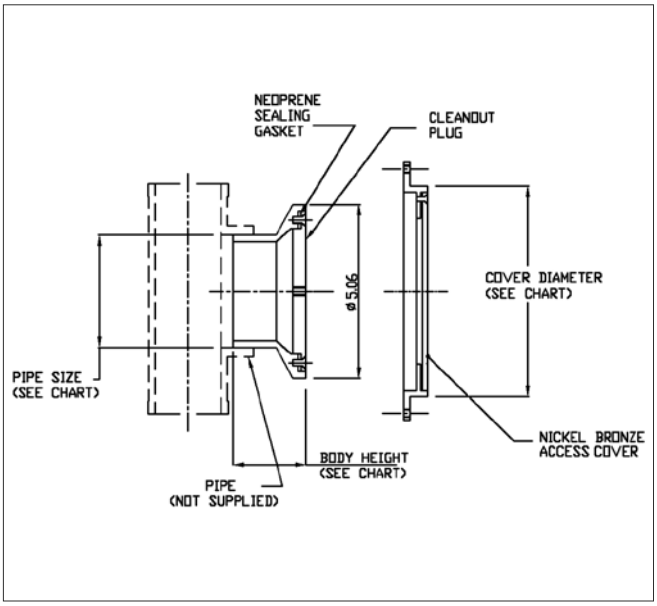

C1450-R LINE CLEANOUT WITH ROUND NICKEL BRONZE WALL ACCESS PANEL				
MODEL NUMBER	WT. Lbs	PIPE SIZE	COVER DIAMETER	LIST PRICE
C1452,3-R6-1	10.75	2", 3"	6"	$ 693.00
C1454-R6-1	11.25	4"	6"	$ 771.00

C1450-R OPTIONAL VARIATIONS:		
SUFFIX	DESCRIPTION	LIST PRICE
-3	Stainless steel access cover	$ 1055.00
-6	Security screws (TR25 Torx and Pin) (H-1039A)	$ 96.00
-30	PVC socket connection	No Add
-31	ABS socket connection	No Add

Design and dimensions are subject to modification. Prices do not include applicable taxes. Visit **www.mifab.com** for the most recent product information.
MIFAB®, Inc., 1321 West 119th Street, Chicago, Illinois 60643-5109, USA Toll Free: 1-800-465-2736 • Fax: 1-773-341-3049
All sales subject to MIFAB's® Terms & Warranties. Please refer to inside front cover. sales@mifab.com • Canada Toll Free: 1-800-387-3880

C1450-RD LINE CLEANOUT WITH ROUND STAINLESS STEEL SMOOTH ACCESS COVER C1450-RD

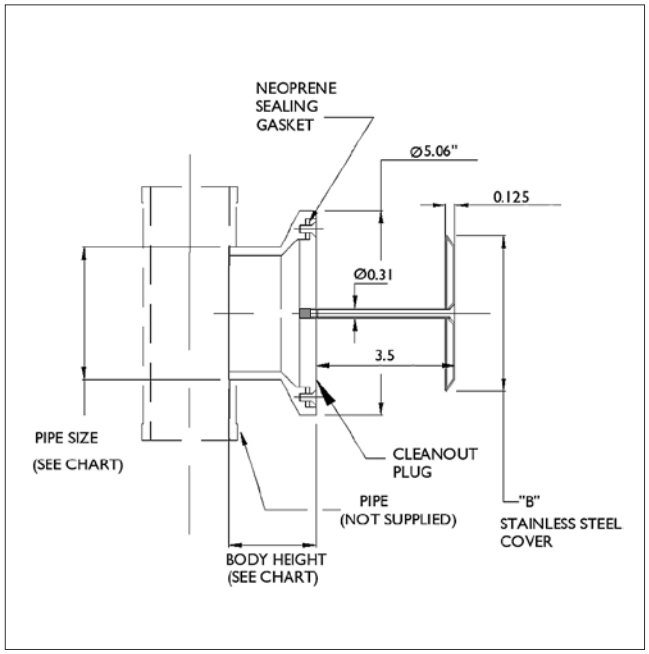

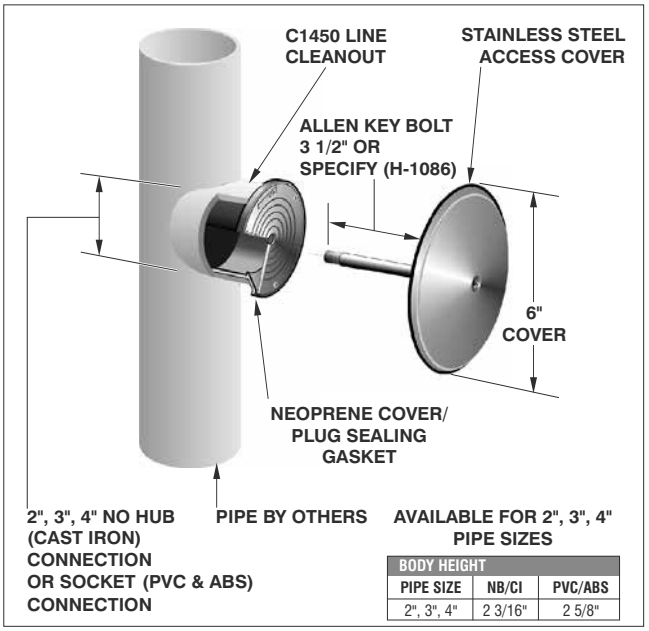

BODY HEIGHT		
PIPE SIZE	NB/CI	PVC/ABS
2", 3", 4"	2 3/16"	2 5/8"

C1450-RD LINE CLEANOUT WITH ROUND STAINLESS STEEL SMOOTH ACCESS COVER				
MODEL NUMBER	WT. Lbs	PIPE SIZE	COVER DIAMETER	LIST PRICE
C1452-RD6	5.75	2"	6"	$ 561.00
C1453-RD6	6.00	3"	6"	$ 631.00
C1454-RD6	6.25	4"	6"	$ 709.00

C1450-RD OPTIONAL VARIATIONS:		
SUFFIX	DESCRIPTION	LIST PRICE
-6	Security screw (H-1086A)	$ 96.00
-11	White powder coated finish	$ 331.00
-30	PVC socket connection	No Add
-31	ABS socket connection	No Add
-87	Longer screw over 3 1/2", per inch	$ 28.50
-95	Client logo	$ 1175.00

C1450-S LINE CLEANOUT WITH SQUARE NICKEL BRONZE ACCESS COVER C1450-S

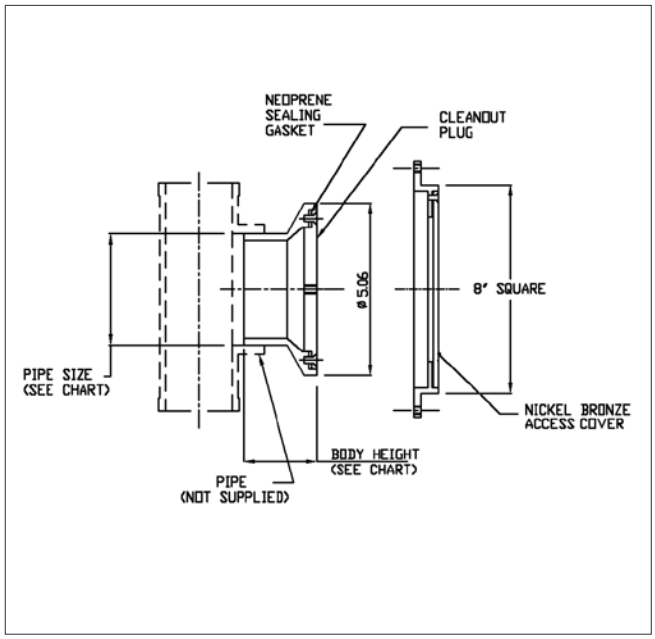

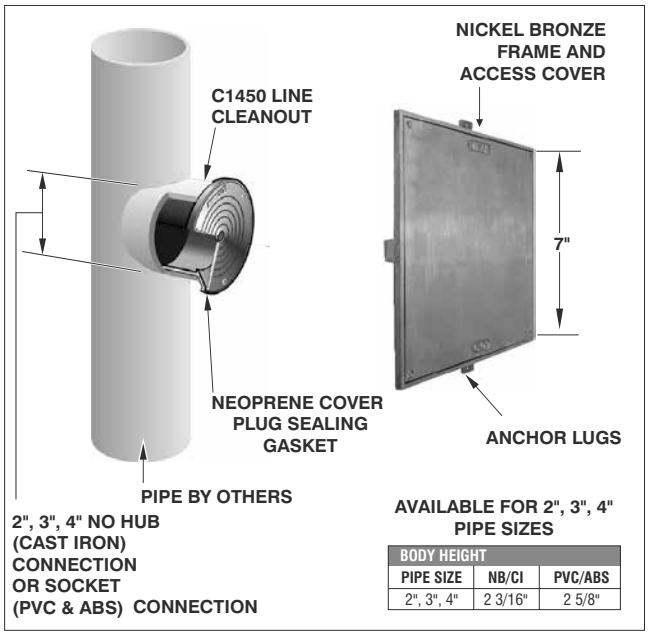

BODY HEIGHT		
PIPE SIZE	NB/CI	PVC/ABS
2", 3", 4"	2 3/16"	2 5/8"

C1450-S LINE CLEANOUT WITH SQUARE NICKEL BRONZE ACCESS COVER				
MODEL NUMBER	WT. Lbs	PIPE SIZE	COVER SIZE	LIST PRICE
C1452,3-S7-1	10.75	2", 3"	7" x 7"	$ 1041.00
C1454-S7-1	11.25	4"	7" x 7"	$ 1118.00

C1450-S OPTIONAL VARIATIONS:		
SUFFIX	DESCRIPTION	LIST PRICE
-3	Stainless steel access cover	$ 1055.00
-6	Security screws (TR25 Torx and pin) (H-1039A)	$ 96.00
-30	PVC socket connection	No Add
-31	ABS socket connection	No Add
-95	Client logo	$ 1175.00

CLEANOUTS

C1460 CAST IRON STACK CLEANOUT WITH PLUG C1460

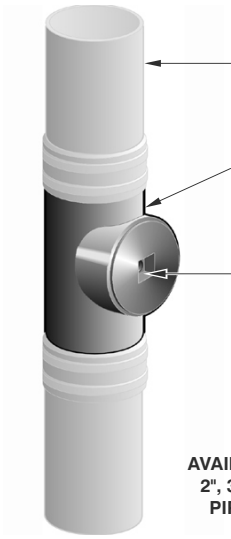

AVAILABLE FOR 2", 3", 4", 6", 8" PIPE SIZES

BODY HEIGHT	
PIPE SIZE	BODY HEIGHT
2"	6 1/2"
3"	7 3/4"
4"	8 3/4"
6"	12 1/2"
8"	15"

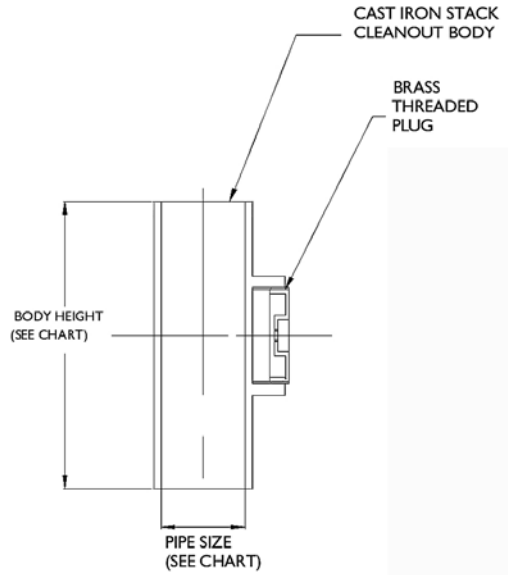

C1460 CAST IRON STACK CLEANOUT WITH PLUG			
MODEL NUMBER	WT. Lbs	PIPE SIZE	LIST PRICE
C1462	3.50	2"	$ 316.00
C1463	5.50	3"	$ 394.00
C1464	7.50	4"	$ 610.00
C1466	21.50	6"	$ 1726.00
C1468	25.00	8"	$ 2144.00

C1460 OPTIONAL VARIATIONS:		
SUFFIX	DESCRIPTION	LIST PRICE
-6	Security screws (TR25 Torx and Pin) (H-1039A)	$ 127.00

C1460-R CAST IRON STACK CLEANOUT W/PLUG & ROUND NICKEL BRONZE ACCESS COVER C1460-R

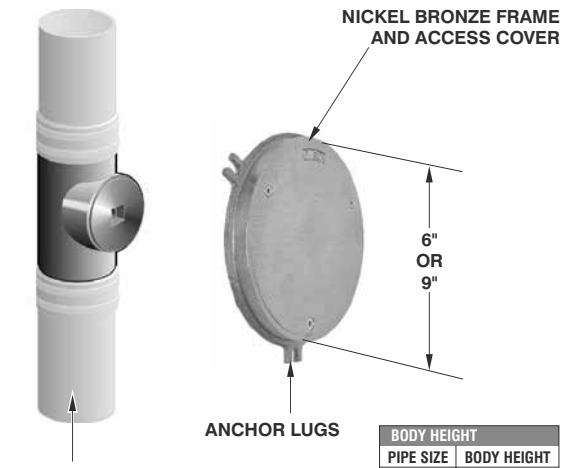

AVAILABLE FOR 2", 3", 4", 6", 8" PIPE SIZES

BODY HEIGHT	
PIPE SIZE	BODY HEIGHT
2"	6 1/2"
3"	7 3/4"
4"	8 3/4"
6"	12 1/2"
8"	15"

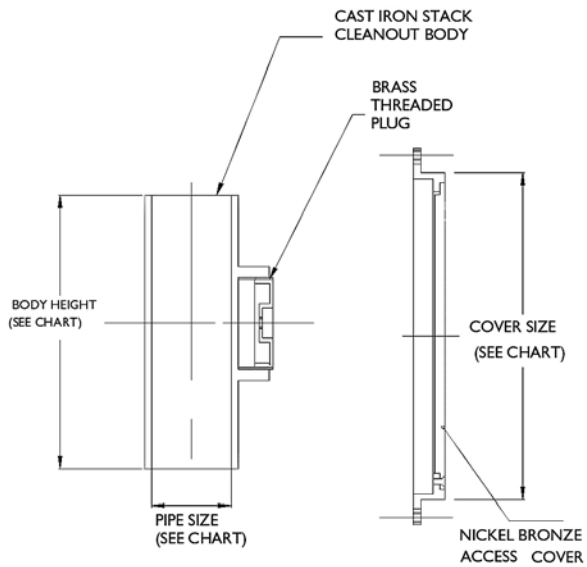

C1460-R CAST IRON STACK CLEANOUT WITH PLUG AND ROUND NICKEL BRONZE ACCESS COVER				
MODEL NUMBER	WT. Lbs	PIPE SIZE	COVER DIAMETER	LIST PRICE
C1462-R6-1	9.00	2"	6"	$ 801.00
C1463-R6-1	11.00	3"	6"	$ 879.00
C1464-R6-1	13.00	4"	6"	$ 1095.00
C1466-R9-1	27.00	6"	9"	$ 2943.00
C1468-R9-1	31.00	8"	9"	$ 3361.00

C1460-R OPTIONAL VARIATIONS:		
SUFFIX	DESCRIPTION	LIST PRICE
-3	Stainless steel access cover	$ 1055.00
-6	Security screws (TR25 Torx and Pin) (H-1039A)	$ 96.00
-95	Client logo	$ 1175.00

Design and dimensions are subject to modification. Prices do not include applicable taxes. Visit **www.mifab.com** for the most recent product information.
MIFAB®, Inc., 1321 West 119th Street, Chicago, Illinois 60643-5109, USA Toll Free: 1-800-465-2736 • Fax: 1-773-341-3049
All sales subject to MIFAB's® Terms & Warranties. Please refer to inside front cover. sales@mifab.com • Canada Toll Free: 1-800-387-3880

C1460-RD CAST IRON STACK CLEANOUT W/PLUG & ROUND STAINLESS STEEL SMOOTH ACCESS COVER & SCREW C1460-RD

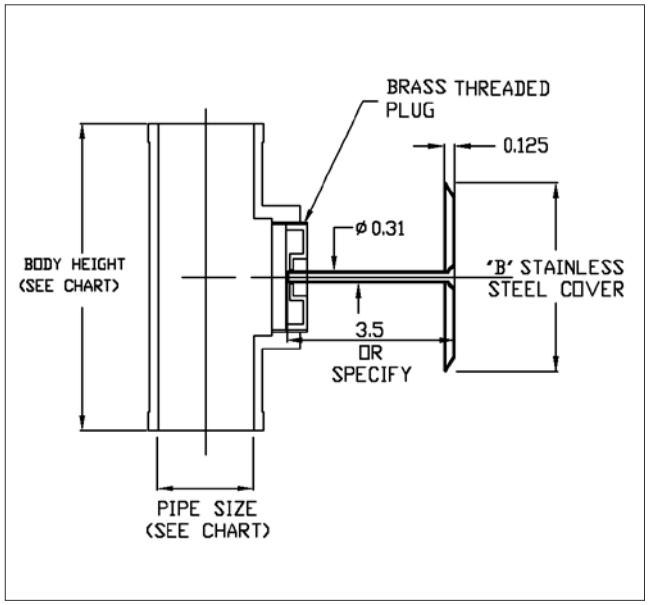

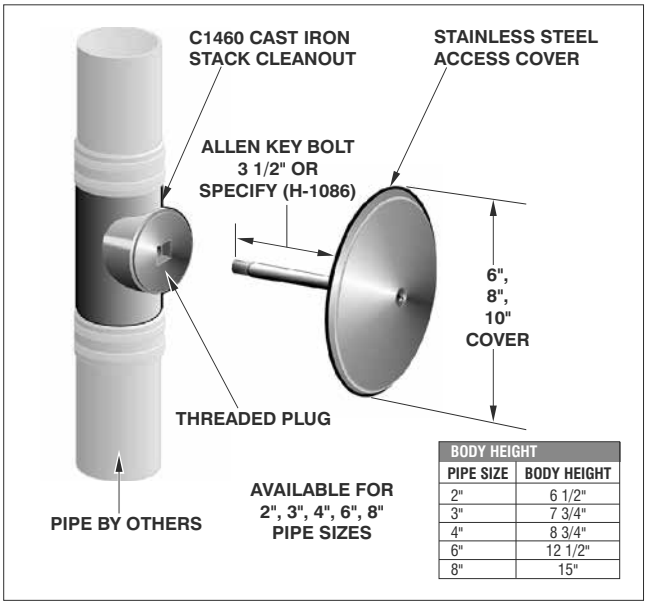

BODY HEIGHT	
PIPE SIZE	BODY HEIGHT
2"	6 1/2"
3"	7 3/4"
4"	8 3/4"
6"	12 1/2"
8"	15"

C1460-RD CAST IRON STACK CLEANOUT WITH PLUG AND STAINLESS STEEL SMOOTH ACCESS COVER

MODEL NUMBER	WT. Lbs	PIPE SIZE	BODY HEIGHT	COVER DIAMETER	LIST PRICE
C1462-RD5	4.00	2"	6 1/2"	5"	$ 553.00
C1463-RD5	6.00	3"	7 3/4"	5"	$ 631.00
C1464-RD6	8.00	4"	8 3/4"	6"	$ 1033.00
C1466-RD8	22.00	6"	12 1/2"	8"	$ 2384.00
C1468-RD10	26.00	8"	15"	10"	$ 2853.00

C1460-RD OPTIONAL VARIATIONS:

SUFFIX	DESCRIPTION	LIST PRICE
-6	Security screw (H-1086A)	$ 96.00
-11	White powder coated finish	$ 331.00
-87	Longer screw over 3 1/2", per inch	$ 28.50
-96	Client logo	$ 1175.00

C1460-S CAST IRON STACK CLEANOUT W/PLUG & SQUARE NICKEL BRONZE ACCESS COVER C1460-S

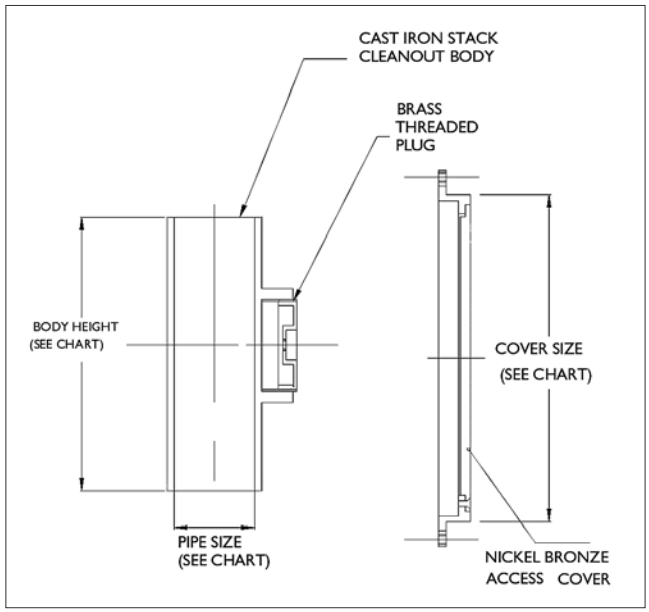

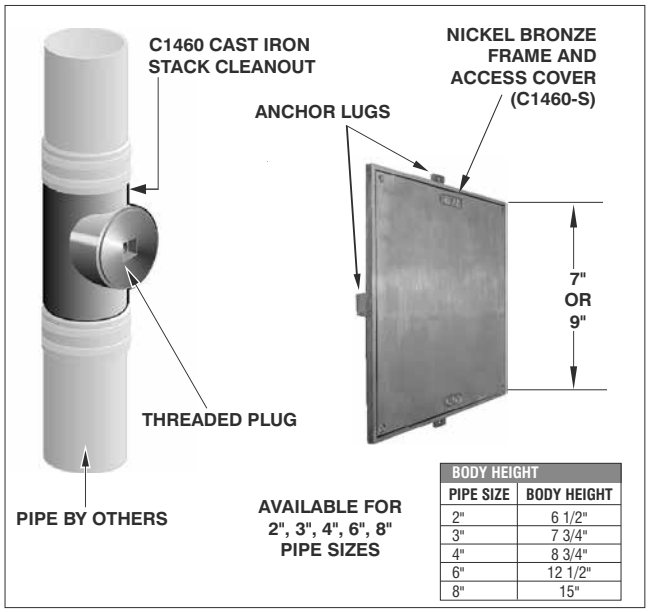

BODY HEIGHT	
PIPE SIZE	BODY HEIGHT
2"	6 1/2"
3"	7 3/4"
4"	8 3/4"
6"	12 1/2"
8"	15"

C1460-S CAST IRON STACK CLEANOUT WITH PLUG AND SQUARE NICKEL BRONZE ACCESS COVER

MODEL NUMBER	WT. Lbs	PIPE SIZE	COVER SIZE	LIST PRICE
C1462-S7-1	9.00	2"	7" x 7"	$ 1149.00
C1463-S7-1	11.00	3"	7" x 7"	$ 1226.00
C1464-S7-1	13.00	4"	7" x 7"	$ 1443.00
C1466-S9-1	27.00	6"	9" x 9"	$ 2943.00

C1460-S OPTIONAL VARIATIONS:

SUFFIX	DESCRIPTION	LIST PRICE
-3	Stainless steel access cover	$ 1055.00
-6	Security screws (TR25 Torx and Pin)	$ 96.00
-95	Client logo	$ 1175.00

C1470 CAST IRON STACK CLEANOUT

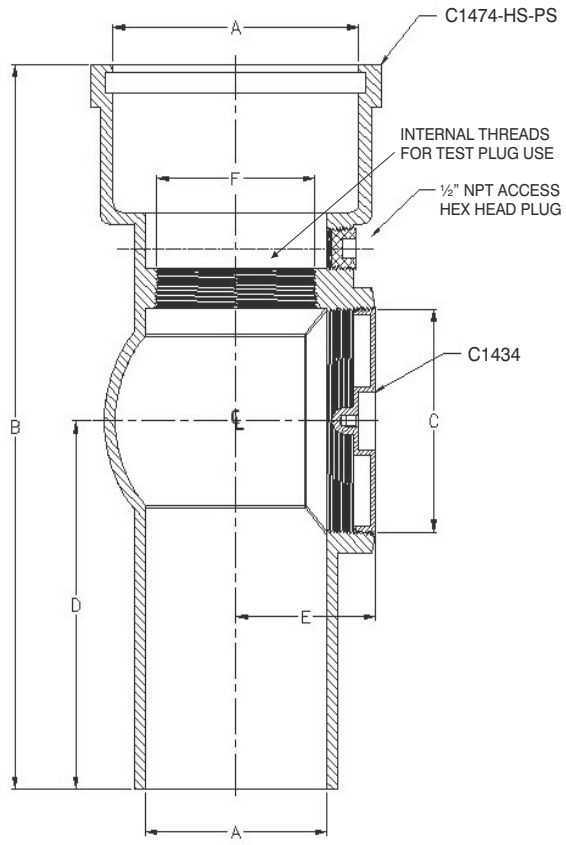

Function: The C1470 Series is used in concealed drainage lines where access to the piping is required via a cleanout that permits testing of the piping above the plug through the use of internal threads inside of the tee.

C1470 CAST IRON STACK CLEANOUT WITH TEST PLUG

MODEL NUMBER	"A" PIPE SIZE	"B"	"C" PLUG SIZE	"D"	"E" SIZE	"F"	LIST PRICE
C1474	4"	14 3/4"	4"	7 ½"	3"	3"	$ 803.00
C1476	6"	17"	6"	8 ½"	5"	5"	$ 1725.00

C1470 OPTIONAL VARIATIONS:

SUFFIX	DESCRIPTION	LIST PRICE
-13	All galvanized	$ 866.00
-34B	Brass test plug	$ 302.00
-NH	No Hub inlet connection	No Add
X	Inside caulk inlet connection (with no hub outlet connection)	No Add

Design and dimensions are subject to modification. Prices do not include applicable taxes. Visit **www.mifab.com** for the most recent product information.

MIFAB®, Inc., 1321 West 119th Street, Chicago, Illinois 60643-5109, USA
Toll Free: 1-800-465-2736 • Fax: 1-773-341-3049
sales@mifab.com • Canada Toll Free: 1-800-387-3880

All sales subject to MIFAB's® Terms & Warranties. Please refer to inside front cover.

C1500 DECK CLEANOUT

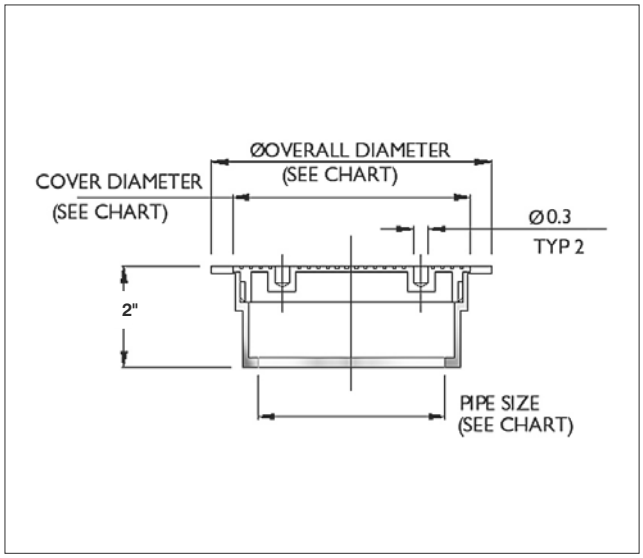

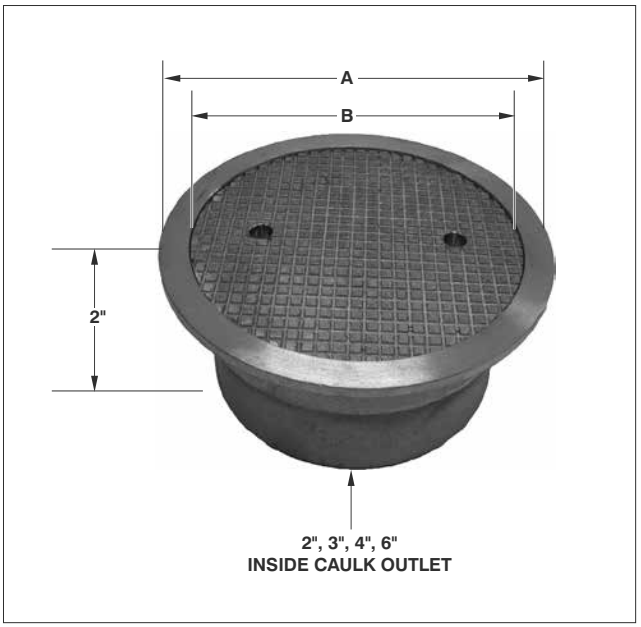

OVERALL & COVER DIAMETER		
PIPE SIZE	OVERALL (A)	COVER (B)
2" I.C.	4 3/4"	2 3/4"
3" I.C.	6"	3 1/2"
4" I.C.	7 3/8"	4 1/2"
6" I.C.	9 3/8"	7 7/8"

H-1042 "T" WRENCH TOOL

C1500 OPTIONAL VARIATIONS:		
SUFFIX	DESCRIPTION	LIST PRICE
H-1042	"T" wrench tool	$ 195.00

C1500 DECK CLEANOUT			
MODEL NUMBER	WT. Lbs	DESCRIPTION	NICKEL BRONZE (-1)
C1502X	3.00	2" round deck cleanout	$ 700.00
C1503X	4.00	3" round deck cleanout	$ 935.00
C1504X	6.00	4" round deck cleanout	$ 1042.00
C1506X	12.00	6" round deck cleanout	$ 1786.00

C1600 DEEP SEAL TRAP WITH FLOOR CLEANOUT

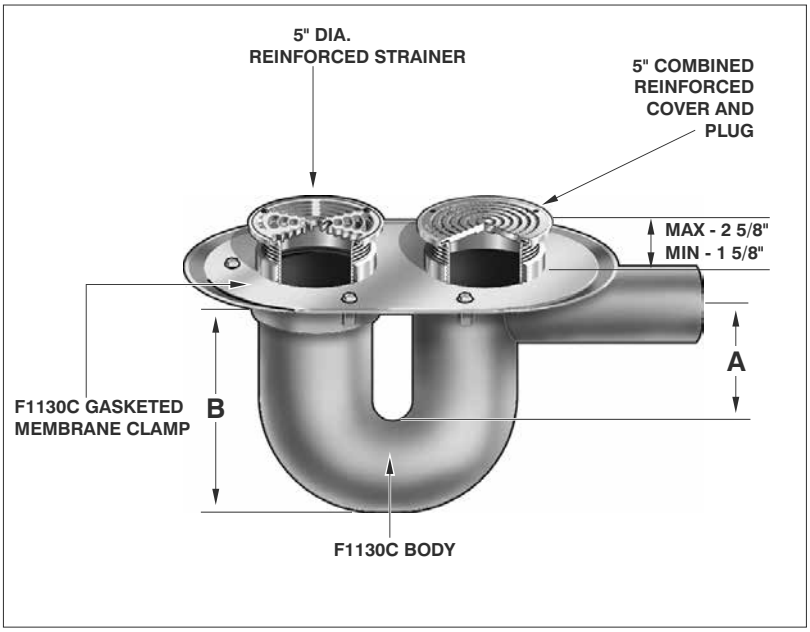

ANSI/ASME RATING
SEE F1100 CHART ON PG. 37 FOR RATINGS

MODEL NUMBER	PIPE SIZE	A	B
C1602	2" no hub	5 3/8"	13 1/2"
C1603	3" no hub	6"	13 1/2"
C1604	4" no hub	6 1/4"	13 1/2"

C1600 OPTIONAL VARIATIONS:		
SUFFIX	DESCRIPTION	LIST PRICE
-13	All galvanized	$ 691.00

C1600 DEEP SEAL TRAP WITH FLOOR CLEANOUT				
MODEL NUMBER	WT. Lbs	DESCRIPTION	DUCTILE IRON COVER (-4)	NICKEL BRONZE (-1) STAINLESS STEEL (COVER) (-3)
C1602	43.00	Deep seal trap and cleanout	$ 1364.00	$ 1628.00
C1603	45.00	Deep seal trap and cleanout	$ 1712.00	$ 2023.00
C1604	47.00	Deep seal trap and cleanout	$ 2006.00	$ 2266.00

ACCESS DOORS

UA UNIVERSAL ACCESS DOOR

MDW DRYWALL BEAD ACCESS DOOR

CAD CEILING OR WALL ACCESS DOOR

CAD-DW CEILING OR WALL ACCESS DOOR WITH DRYWALL BEAD

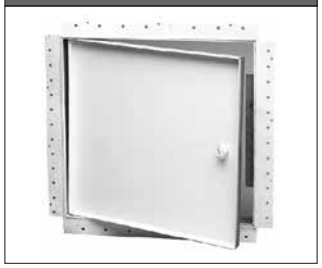

CAD-PL CEILING OR WALL ACCESS DOOR PLASTER FINISH

CAD-FL CEILING OR WALL ACCESS DOOR, FLASH DOOR WITH FRAME

CAD-FL-PL CEILING OR WALL ACCESS DOOR, FLASH DOOR WITH FRAME AND PLASTER FINISH

CAD-FR CEILING OR WALL ACCESS DOOR FIRE RESISTANT

MPFR INSULATED FIRE RATED ACCESS DOOR

MFRU UNINSUSLATED FIRE RATED ACCESS DOOR

MPFR-DW INSULATED FIRE RATED ACCESS DOOR WITH DRYWALL BEAD

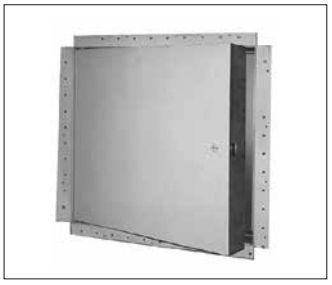

MI-SAD MEDIUM SECURITY ACCESS DOOR

MI-SADH HIGH SECURITY ACCESS DOOR

MI-FVP FLASH VALVE PANEL

MI-SF SURFACE ACCESS DOOR

MI-VB RECESSED MOUNTED VALVE BOX

MI-VB-SM SURFACE MOUNTED VALVE BOX

PA PLASTIC ACCESS DOOR

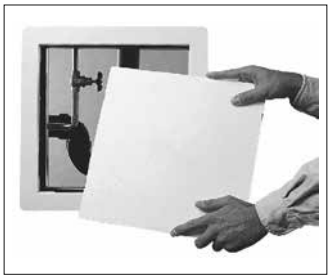

FHA, FHG FLOOR ACCESS DOOR

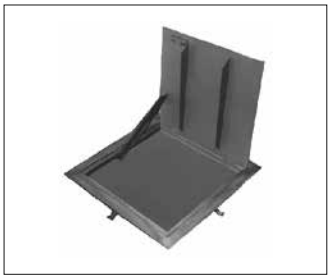

RHA, RHG ROOF HATCH

See current AD Access Door Price Book for List Prices and discount structure of the Access Doors. All sales subject to MIFAB's Terms and Warranties Please refer to inside front cover.

Design and dimensions are subject to modification. Prices do not include applicable taxes. Visit **www.mifab.com** for the most recent product information.

MIFAB®, Inc., 1321 West 119th Street, Chicago, Illinois 60643-5109, USA
Toll Free: 1-800-465-2736 • Fax: 1-773-341-3049
sales@mifab.com • Canada Toll Free: 1-800-387-3880

All sales subject to MIFAB's® Terms & Warranties. Please refer to inside front cover.

SELF CLEANING INTERCEPTORS

MIFAB introduces our newest line of self cleaning grease interceptors. These are made with a macerator pump to grind up accumulated solids that settle in the bottom of the interceptor. A control panel activates the pump to discharge the waste water from the interceptor to the sewer. The control panel also controls a solenoid valve to flush fresh water into the interceptor to replace the vacated water. This is ideal for facilities that require as little maintenance as possible with their grease interceptors. For product specification information, please go to the www.mifab.com website, interceptor section.

Lil Max® 7-50 GPM H.D.P.E. Interceptors

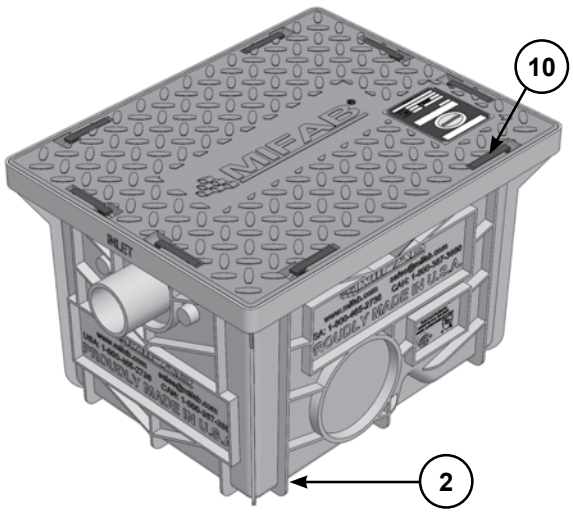

Lil Max® 7-50 GPM H.D.P.E. Interceptors

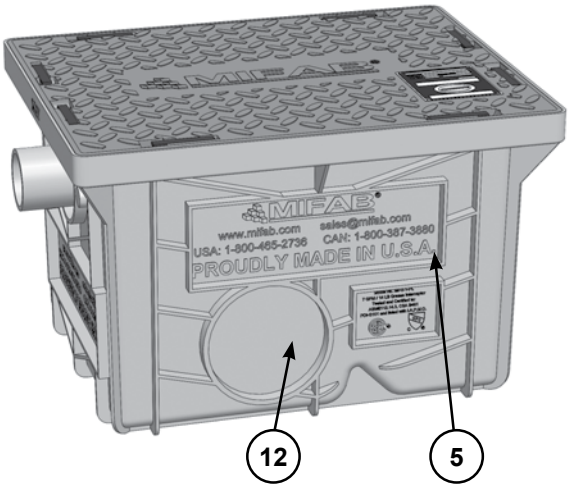

3

Lil Max® 7-50 GPM H.D.P.E. Interceptors

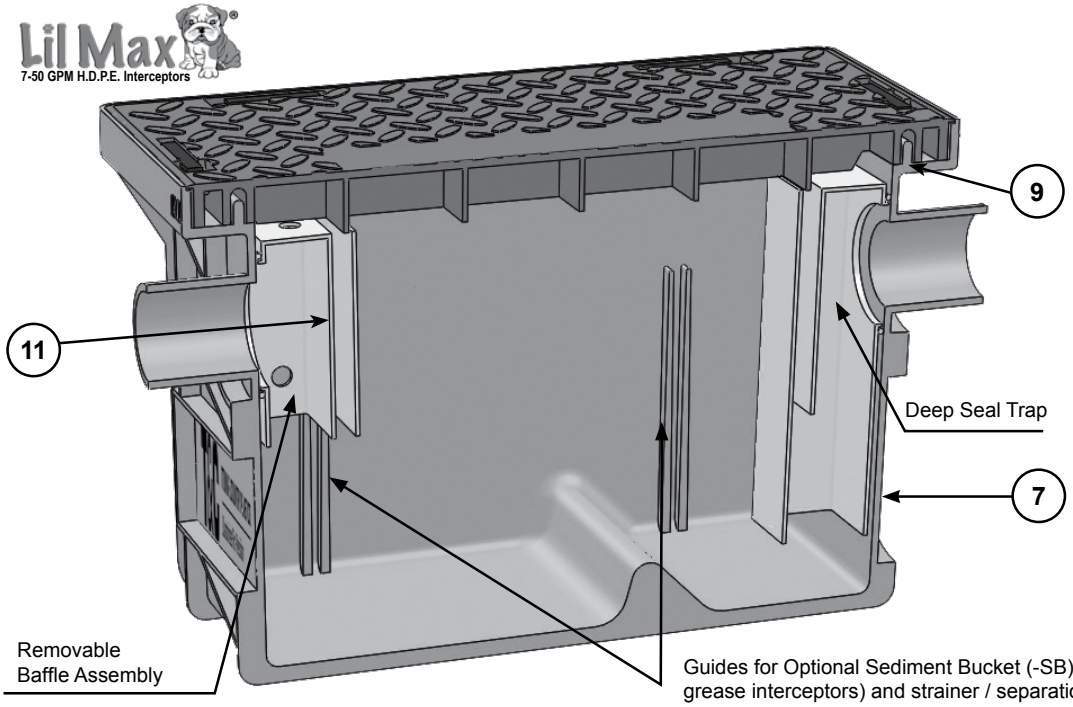

6

Limited Lifetime Warranty

1

No Hub flow control fitting

8

All Lil Max interceptors can be shipped via UPS / Fedex

Alarm control box 4

Float switch

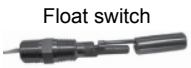

High Level Alarm Illustrated
(Specify suffix -HLA)

5

Made in U.S.A.

INTERCEPTORS

Design and dimensions are subject to modification. Prices do not include applicable taxes. Visit **www.mifab.com** for the most recent product information.

MIFAB®, Inc., 1321 West 119th Street, Chicago, Illinois 60643-5109, USA
Toll Free: 1-800-465-2736 • Fax: 1-773-341-3049
sales@mifab.com • Canada Toll Free: 1-800-387-3880

All sales subject to MIFAB's® Terms & Warranties. Please refer to inside front cover.

1. ***External Vented Flow Control Fitting***
All of MIFAB®'s PDI approved grease interceptors are supplied with an external, vented flow control fitting. Studies have proven that the use of an external, vented flow control fitting results in more effective grease interception because of the air introduced into the drain line through the vent in the top of the flow control fitting. As this air enters the interceptor, grease coats the resulting air bubbles and increases the efficiency of the grease rising to the surface. MIFAB's ASME approved grease interceptors are supplied with an internal stainless steel orifice plate (flow control).

2. ***Structural Integrity***
Ribbed body design provides extra structural integrity for in ground installations. The body is manufactured in the USA out of a seamless, injection molded high density polyethylene (H.D.P.E.) with a 3/8" uniform wall thickness. The body is strong but lightweight, allowing it to be installed without the need of a backhoe or crane.

3. ***Approvals***
All eight of the Lil Max® plastic grease interceptors are tested and certified to the PDI G-101, ASME A112.14.3 and CSA B481 Standards and listed with IAPMO. Lil Max grease interceptors are in compliance with International Plumbing Code (I.P.C.) / I.C.C. by I.A.P.M.O.

4. ***Options and Accessories***
MIFAB®'s 35 years of experience with grease interceptors provides us with a superior knowledge of options and accessories often required with grease interceptors. We can expertly provide any of the following options: dosing pump, enzyme port, high level alarm, multiple inlet and outlet ports, sediment bucket and threaded connections.

Made in U.S.A.

5. ***Made in the USA***
MIFAB®'s plastic grease and oil interceptors are made in the United States of America and meet the requirements of the Buy American Act.

6. ***Lifetime Warranty***
MIFAB® offers a limited lifetime warranty on all of our plastic grease and oil interceptors.

7. ***Lightweight***
MIFAB®'s Lil Max® plastic grease interceptors are injection molded with Polypropylene material. They weigh significantly less than steel grease interceptors and therefore are much easier to handle and install.

8. ***Individually Boxed Interceptors***
Every Lil Max® plastic grease interceptor is shipped to you in its own cardboard box for easy handling and protection of the product during shipping and handling. All Lil Max interceptors can be shipped via UPS / Fedex.

9. ***Sealed Lid***
The lid sealing gasket is located within the underside of the lid – not in the top of the interceptor. This prevents tearing and wear on the gasket and provides a more secure seal to minimize odors.

10. ***Easy to Remove Lid***
The latches securing the lid to the body are easy to open and are made with an extra wide finger access area. No tools are required to open the lid of the Lil Max® interceptors.

11. ***Easy to Clean***
The internal baffle can be easily removed and the lid covers the entire open area of the inside of the interceptor for complete and unrestricted access to the interior of the interceptor for cleaning.

12. ***Modularity***
The Lil Max® interceptors can be converted at the MIFAB® factory into oil interceptors with the oil draw off and vent connections for applications that require oil interceptors. Lil Max can also be converted into solids, plaster, lint, rice and fish scale interceptors.

* ***Complete Range of Sizes***
The Lil Max® grease interceptors are available in 7, 10, 15, 20, 25, 35 and 50 GPM sizes in addition to a 25 GPM low profile model. The 10 through 50 GPM models are also available as oil, solids, plaster, lint, sand, fish scale and rice interceptors.

* ***Strong Lid***
Weight load capacity of 350 lbs.

Since 1982, MIFAB® has been manufacturing grease interceptors. Thirty-five years of experience and customer feedback has given us an advantage when it comes to designing and manufacturing the best steel and stainless steel grease interceptors in the market. We have applied this experience to our new range of large, H.D.P.E. patented grease interceptors. We invite you to experience the MIFAB® difference – best in class when it comes to H.D.P.E. grease interceptors. The Big Max® Series of interceptors are also available in the following models: oil, solids, plaster, lint, sand, fish scale and rice.

BIG MAX®

Large H.D.P.E. Interceptors

MIFAB®'s Big Max interceptors are engineered to perform based on a balanced air environment within the interceptor. This ensures that the interceptor performs at a high operating efficiency. During regular maintenance, it is important to check that this hole is unobstructed. The blocking of this hole can dramatically reduce the operating performance of the interceptor and result in the accumulated grease waste within the interceptor to be discharged downstream. Ensure that this hole is always positioned upwards - as close as possible to the underside of the lid.

The direct connect gasket (part # XL-MI-G-PL-PCG) and hardware (part # HS-25) are shipped standard with every Big Max interceptor (two of each for the large (two lid) Big Max and one of each for the one lid Big Max).

Optional external vented flow control fitting. It is supplied with all P.D.I. approved grease interceptors.

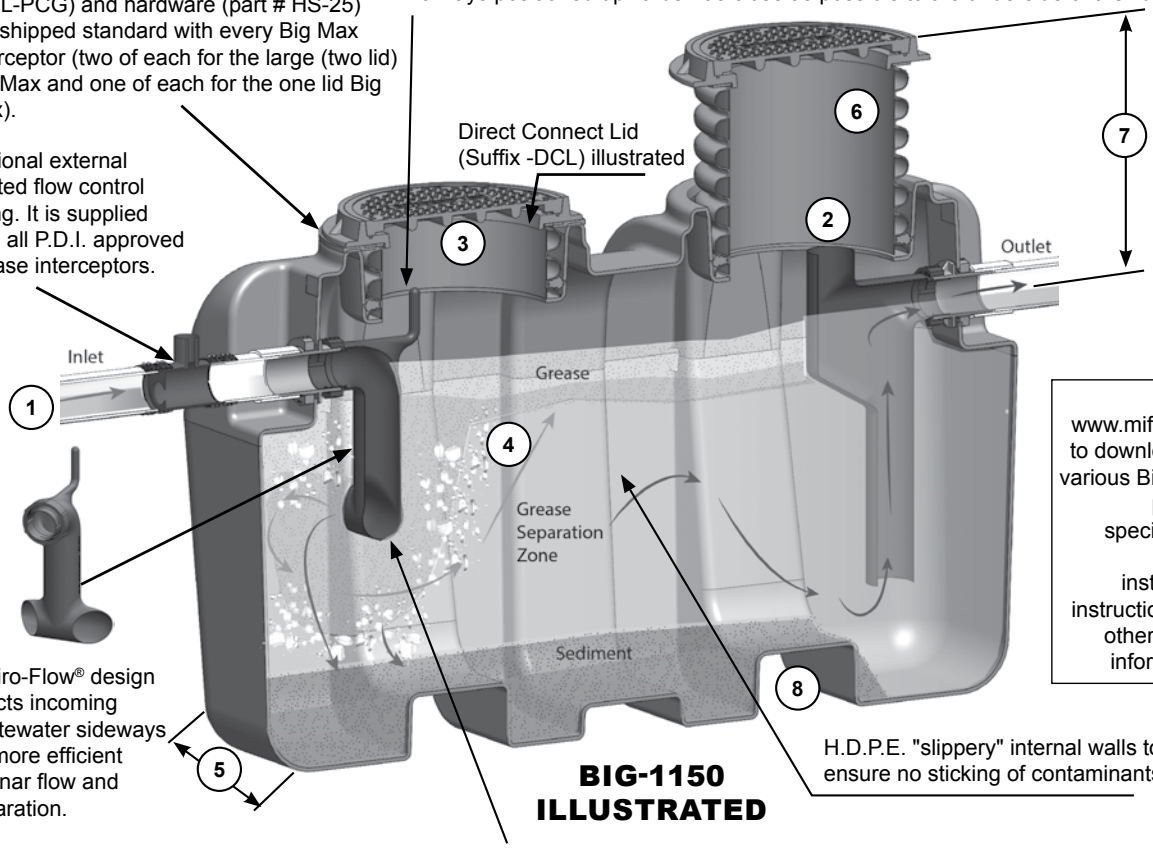

Go to www.mifab.com to download the various Big Max® product specification sheets, installation instructions and other helpful information.

Enviro-Flow® design directs incoming wastewater sideways for more efficient laminar flow and separation.

H.D.P.E. "slippery" internal walls to ensure no sticking of contaminants

BIG-1150 ILLUSTRATED

MIFAB®'s 35 years of manufacturing interceptors has provided us with a wealth of experience and knowledge on the factors that impact their performance. Our new and innovative Enviro-Flow® inlet and outlet design significantly reduces inlet velocity and creates optimal laminar flow to ensure maximum grease separation efficiency. Flow entering the MIFAB interceptor is directed to the bottom by the inlet baffle to avoid any disturbance of the previously accumulated surface layer of grease / oil in the interceptor. The innovative design of the bottom of the inlet baffle directs the incoming waste water sideways into the interceptor for the most efficient laminar flow. The baffle also serves to reduce the velocity and surge of inflow, providing sufficient retention time for effective separation of the grease. The grease rises to the surface for manual or pump out removal and the baffle is easy to remove for cleaning. The waste water is now relieved of over 90% of the fats, oils, and greases and continues to flow through the interceptor.

External Sampling Port

For jurisdictions that require the installation of an external sampling port, the MIFAB® XL-MI-G-PL-SP is the answer. It is manufactured from HDPE and available with a standard AASHTO H-20 load rated cover. (Specify suffix -SP)

H-20
Load Rated Lid

Multiple inlet / outlet options

Float switch

High Level Alarm Illustrated
(Specify suffix -HLA)

Note that the the alarm control box and float switch are not installed at the MIFAB factory. They need to be installed on site.

Design and dimensions are subject to modification. Prices do not include applicable taxes. Visit **www.mifab.com** for the most recent product information.
MIFAB®, Inc., 1321 West 119th Street, Chicago, Illinois 60643-5109, USA
Toll Free: 1-800-465-2736 • Fax: 1-773-341-3049
sales@mifab.com • Canada Toll Free: 1-800-387-3880
All sales subject to MIFAB's® Terms & Warranties. Please refer to inside front cover.

1. **External Vented Flow Control Fitting**

   All of MIFAB®'s PDI approved grease interceptors are supplied with an external, vented flow control fitting. Studies have proven that the use of an external, vented flow control fitting results in more effective grease interception because of the air introduced into the drain line through the vent in the top of the flow control fitting. As this air enters the interceptor, grease coats the resulting air bubbles and increases the efficiency of the grease rising to the surface. MIFAB's ASME approved grease interceptors are supplied with an internal stainless steel orifice plate (flow control).

2. **Sample Port Access**

   Sample port access is provided standard in our interceptors. Simply remove the lid to gain access to the top opening of the internal inlet and outlet piping. A sample of the water discharging from the interceptor can be taken from the top opening of the outlet piping (deep seal trap).

3. **H-20 Load Rated Lid**

   Standard, 20,000 Lb. AASHTO H-20 load rated steel encased composite, gasketed lids and collar are standard to withstand heavy loads

4. **Structural Integrity**

   Ribbed body design provides extra structural integrity for in ground installations. The body is manufactured in the USA out of seamless, rotationally molded High Density Polyethylene with a 3/8" uniform wall thickness. The body is strong but lightweight, allowing it to be installed without the need of a backhoe or crane. The H.D.P.E. material will not crack, chip or bulge under extreme impact, sunlight and / or temperature changes. H.D.P.E. is a much better material for interceptors than fiberglass because H.D.P.E. has resistance to a greater number of chemicals than fiberglass. Fiberglass is also hard and stiff and is subject to cracking. A rotationally molded H.D.P.E. interceptor is simply tougher and has much greater impact resistance vs. fiberglass. Fiberglass interceptors also have a negative environmental impact because they are made with VOCs - (Volatile Organic Compounds). Facilities that produce fiberglass interceptors have a negative impact on the environment because of VOCs they put into the air. Rotationally molded H.D.P.E. interceptors have NO environmental impact.

5. **Narrow Width**

   The 33 ½" width allows the interceptor to fit through doorways and down stairwells. Two people can carry and install the interceptor.

6. **With MIFAB's patented extension system every lid ships with an 18" x 18" piece of ADS corrugated pipe which provides the installer with up to a 24 1/2" "C" dimension.**

   If a greater "C" dimension is required, the contractor has the option to purchase an extension from MIFAB® or to buy a length of ADS pipe from their local waterworks wholesaler in order to complete the installation immediately. This also means that the cost of the MIFAB® extension (when ordered from a local waterworks wholesaler will be significantly less expensive that buying the same height extension system from others). In addition, extensions from others are only available from that specific manufacturer – resulting in delays and time for production and shipment to the contractor. Flexible extensions make for easier installation where grade may be unlevel.

   Key Feature

7. **Extra Rough-in Dimension**

   The standard rough-in dimension ("C" dimension – from the middle of the inlet / outlet to the top of the lid) is 24½" and can be field adjusted by the contractor down to 15 ½" on the BIG-750 and to 16" on the BIG-1150. The 24½" rough-in dimension provided is almost double that of others – making it less likely to buy expensive extensions.

8. **Forklift Access**

   Forklift access points are provided in the bottom of the interceptors to allow for easy handling.

Approvals

MIFAB®'s BIG-750 and BIG-1150 grease interceptors are tested and certified to the PDI G-101, ASME A112.14.3 and CSA B481 Standards and listed with IAPMO. Lil Max grease interceptors are in compliance with International Plumbing Code (I.P.C.) / I.C.C. by I.A.P.M.O.

Grease Design Capacity

MIFAB®'s BIG-750 has a flow rate of 75 GPM and a grease design capacity of 500 lbs. and the BIG-1150 grease interceptor has a flow rate of 100 GPM and a grease design capacity of 1,555 lbs. These capacities are greater than others in the market.

Grip Points for Anchor Kit

Two grip points are provided on each side of the interceptor for easy handling. These grip points also serve as securing areas for MIFAB®'s high water anchor kit which allows the contractor to secure the interceptor to the ground before concrete is poured around the unit (Suffix –AK).

Options and Accessories

MIFAB®'s 35 years of experience with grease interceptors provides us with a superior knowledge of options and accessories often required with grease interceptors. We can expertly provide any of the following options: dosing pump, enzyme port, high level alarm, multiple inlet and outlet ports, sediment bucket and threaded connections.

Lifetime Warranty. Made in the USA

MIFAB® offers a limited lifetime warranty on all of our plastic grease and oil interceptors. MIFAB®'s plastic grease and oil interceptors are made in the United States of America and meet the requirements of the Buy American Act.

Made in U.S.A.

Multiple Inlet/Outlet Options

MIFAB®'s interceptors are manufactured with two flat spaces on each side for two optional side inlets or outlets on both sides of the interceptor. This allows for straight through or side inlet/outlet pipe connections. (Specify required suffix for desired optional inlet/outlet).

Since 1982, MIFAB® has been manufacturing grease interceptors. Thirty-five years of experience and customer feedback has given us an advantage when it comes to designing and manufacturing the best steel and stainless steel grease interceptors in the market. We have applied this experience to our new range of large, H.D.P.E., patented grease interceptors. We invite you to experience the MIFAB® difference – best in class when it comes to H.D.P.E. grease interceptors. The SUPERMAX® Series of interceptors are also available as oil interceptors.

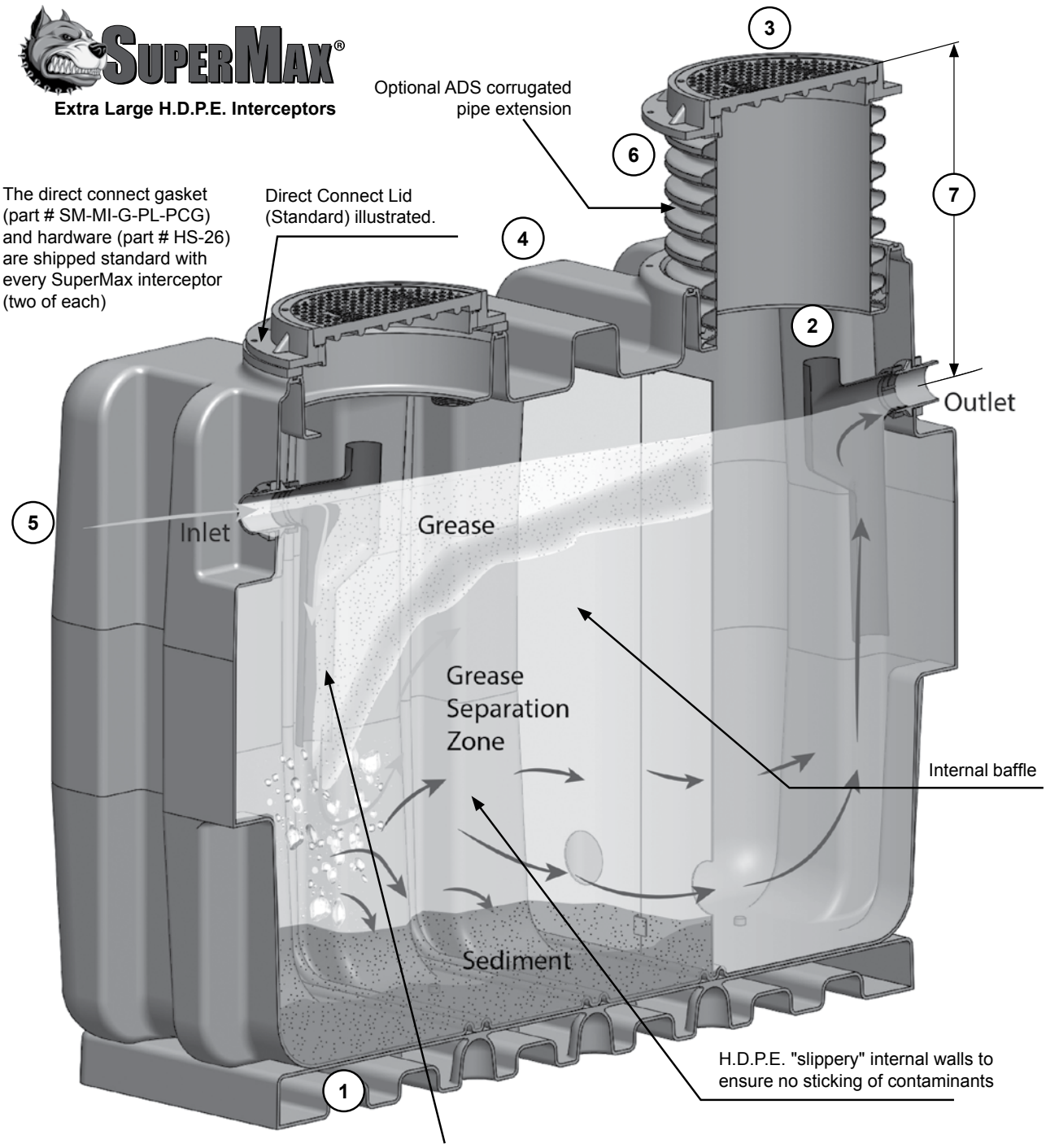

MIFAB®'s 35 years of manufacturing interceptors has provided us with a wealth of experience and knowledge on the factors that impact their performance. Our new and innovative Enviro-Flow® inlet and outlet design significantly reduces inlet velocity and creates optimal laminar flow to ensure maximum grease separation efficiency. Flow entering the MIFAB® interceptor is directed to the bottom by the inlet baffle to avoid any disturbance of the previously accumulated surface layer of grease / oil in the interceptor. The innovative design of the bottom of the inlet baffle directs the incoming waste water sideways into the interceptor for the most efficient laminar flow. The baffle also serves to reduce the velocity and surge of inflow, providing sufficient retention time for effective separation of the grease. The grease rises to the surface for manual or pump out removal and the baffle is easy to remove for cleaning. The waste water is now relieved of over 90% of the fats, oils, and greases and continues to flow through the interceptor.

Design and dimensions are subject to modification. Prices do not include applicable taxes. Visit **www.mifab.com** for the most recent product information.
MIFAB®, Inc., 1321 West 119th Street, Chicago, Illinois 60643-5109, USA
Toll Free: 1-800-465-2736 • Fax: 1-773-341-3049
sales@mifab.com • Canada Toll Free: 1-800-387-3880
All sales subject to MIFAB's® Terms & Warranties. Please refer to inside front cover.

1. Base for Body

A base is always included with the SUPERMAX® interceptors. This is an expensive option from others. The base provides a flat surface so that the interceptor can easily be installed above ground in applications like parking lot spaces. The base is 6" high and is always secured to the underside of the interceptor.

2. Sample Port Access

Sample port access is provided standard in our interceptors. Simply remove the lid to gain access to the top opening of the internal inlet and outlet piping. A sample of the water discharging from the interceptor can be taken from the top opening of the outlet piping (deep seal trap).

3. H-20 Load Rated Lid

Standard, 20,000 Lb. AASHTO H-20 load rated steel encased composite, gasketed lids and collar are standard to withstand heavy loads

4. Structural Integrity

Ribbed body design provides extra structural integrity for in ground installations. The body is manufactured in the USA out of seamless, rotationally molded High Density Polyethylene with a 3/8" uniform wall thickness. The body is strong but lightweight, allowing it to be installed without the need of a backhoe or crane.

5. H.D.P.E. Material

MIFAB®'s SUPERMAX® grease and oil interceptors are made with 3/8" thick rotationally molded H.D.P.E. material. H.D.P.E. is less brittle than fiberglass and less likely to crack during installation. The ribbed body design provides for extra rigidity and is less likely to crack or break when installed underground and subject to earth pressures. H.D.P.E. has resistance to a greater amount of chemicals vs. fiberglass. Fiberglass is also hard and stiff and is subject to cracking. A rotationally molded H.D.P.E. interceptor, is simply tougher and has much greater impact resistance vs. fiberglass.

Fibreglass interceptors have a negative environmental impact because they are made with VOC's - (Volatile Organic Compounds). Facilities that produce fiberglass interceptors have a negative impact on the environment because of VOCs they put into the air. Rotationally molded H.D.P.E. interceptors have NO environmental impact.

6. Extensions

MIFAB's patented extension system uses 24" diameter ADS corrugated pipe. The contractor has the option to purchase an extension from MIFAB or to buy a length of ADS pipe from their local waterworks wholesaler in order to complete the installation immediately. This also means that the cost of the MIFAB® extension (when ordered from a local waterworks wholesaler will be significantly less expensive that buying the same height extension system from others). In addition, extensions from others are only available from that specific manufacturer – resulting in delays and time for production and shipment to the contractor. Flexible extensions make for easier installation where grade may be unlevel.

Key Feature

7. Extra Rough-in Dimension

The standard "C" dimension on SUPERMAX® models is 20.25". The standard "C" dimension from others is typically 18". This means that contractors will not have to buy extensions as often - resulting in savings.

Approvals

MIFAB®'s SUPERMAX® grease interceptors are tested and certified to the ANSI Z1001-2016, ASME A112.14.3, CSA B481 Standards and listed with IAPMO. The SUPER-500 is also tested and certified to the P.D.I. G-101 Standard.

Options and Accessories

MIFAB®'s 35 years of experience with grease interceptors provides us with a superior knowledge of options and accessories often required with grease interceptors. We can expertly provide any of the following options: dosing pump, enzyme port, high level alarm, multiple inlet and outlet ports, sediment bucket, coalescing pack and, threaded connections.

Lifetime Warranty. Made in the USA

MIFAB® offers a limited lifetime warranty on all of our plastic grease and oil interceptors. MIFAB®'s plastic grease and oil interceptors are made in the United States of America and meet the requirements of the Buy American Act.

Made in U.S.A.

Multiple Inlet/Outlet Options

MIFAB®'s interceptors are manufactured with flat spaces on each side for two optional side inlets or outlets on both sides of the interceptor. This allows for straight through or side inlet/outlet pipe connections. (Specify required suffix for desired optional inlet/outlet.)

INTRODUCTION

GREASE INTERCEPTORS

Grease, which also includes fats and oils, has historically caused problems in plumbing drainage systems. Grease easily adheres to the inner surface of most commonly used drainage piping material and over time will form into a hard crust as tough as baked clay. The rougher the inner surface of the pipe, the easier this adherence will occur. Grease is also a problem for sewage treatment plants as it taxes the bacterial process used to break down these complex compounds. The purpose of a grease interceptor is to trap and store the suspended grease from the water passing through it. They are usually connected to kitchen sinks, floor drains, and any other plumbing fixtures in restaurants, hotels and institutions that discharge grease laden waste water. MIFAB's grease interceptors operate on the principle of separation by flotation. As our environmental laws have become more restrictive and maintenance costs have increased, public sewer departments have responded by tightening the list of materials allowed to flow into their systems. Severe fines may be levied on those users found to be in violation. Grease that is removed from the drainage system as close as possible to its source and before it becomes contaminated with other material, can be sold to rendering companies and recycled into a variety of products. It can therefore become an economic asset rather than liability.

SIZING

Reliable performance of any grease interceptor is dependant on its being correctly sized to handle the anticipated drainage load from the fixtures it serves. Each MIFAB interceptor is flow and capacity rated for easy selection when sizing requirements have been established and met. Sizing is based on fixture drainage period, service required and volume of wastewater to be handled. These factors combine to establish the anticipated flow rate and the size of the interceptor required. The flow control fitting that is provided with every MIFAB grease interceptor sized 50 GPM and smaller, is installed in the fixture drain line ahead of the interceptor and controls the flow of drainage to the interceptor's rated capacity. This is especially important when the drainage load exceeds that for which the interceptor is sized to handle. The following sizing formula is based on the P.D.I. G-101 (Plumbing and Drainage Institute) requirements:

1. Calculate the volume in cubic inches of all the fixtures to be served by the Grease Interceptor. (length x width x depth = capacity)
2. *Eg: 15" x 10" x 24" = 3600 cubic inches. Since a three compartment sink is serving the grease interceptor, multiply the single compartment cubic inch capacity by three to obtain the total capacity in cubic inches. (10,800 in3). Divide this number by 231 to convert the volume to US gallons. * Eg: Cubic capacity of 10,800 in3÷231=46.75 gallons; multiplied by 75% = 35.06 U.S.G. Use MIFAB® model number MI-G-6 which has a rated flow capacity of 35 G.P.M.
3. These capacities are based on a one minute drain-down time with the interceptor adjacent to the fixture(s). If a two minute drain-down time is acceptable, then divide the capacity by two.
4. The flow control fitting, supplied with the interceptor, must be in position at all times. If this is removed, or not provided, the interceptor will not function to P.D.I. standards.
5. If an interceptor is to be installed with the top level at the finished floor, an extension type may be required. In that instance, the "C" dimension is required, (center line of inlet/outlet to top of the finished floor) and must be specified at time of ordering.

FIXTURE UNIT SIZING METHOD

The majority of plumbing codes list the drainage fixture-unit values for plumbing fixtures. For fixtures not listed, the codes provide drainage fixture-unit values based on drain outlet or trap size. Drainage fixture-unit values are converted to GPM discharge rates on the basis of one drainage fixture-unit equaling 7.5 GPM fixture discharge rate. The drainage fixture-unit sizing for grease interceptors is included for those that prefer this approach as an alternative to the conventional (volume) sizing. The following table provides the suggested PDI size grease interceptor based on drainage fixture-unit sizing method. The following factors may require an increase in the size of the grease interceptor: location, presence of detergents in the waste water, ratio of grease to water, specific gravity weight of the grease filtrates, speed of incoming water flow, presence of large particles mixed with the grease laden water, and percentage of maximum flow capacity. The interceptor should be installed as close as possible to the source of grease to prevent pipes draining into the grease interceptor from becoming clogged as grease-laden water cools before entering the grease interceptor.

Fixture Outlet or Size (inches)	Drainage Trap Fixture Unit Value	GPM Discharge Equivalent	Suggested GPM Flow Rate Interceptor	MIFAB Model Number
1-1/4"	1	**7.5**	**10**	**MI-G-2**
1-1/2"	2	**15.0**	**15**	**MI-G-3**
2"	3	**22.0**	**25**	**MI-G-5**
2-1/2"	4	**30.0**	**35**	**MI-G-6**
3"	5	**37.5**	**50**	**MI-G-7**
4"	6	**45.0**	**50**	**MI-G-7**

MAINTENANCE & GENERAL CONSIDERATIONS

To obtain optimum operating efficiency of a properly sized and installed PDI certified grease interceptor, a regular schedule of maintenance must be adhered to. All PDI certified grease interceptors are furnished with manufacturer's operating and maintenance instructions, which must be followed to insure efficient satisfactory operation.

CLEANING

All grease interceptors must be cleaned regularly. The frequency of grease removal is dependent upon the capacity of the interceptor and the quantity of grease in the waste water. Grease removal intervals may therefore vary from once a week to once in several weeks. When the grease removal interval has been determined for a specific installation, regular cleaning at that interval is necessary to maintain the rated efficiency of the interceptor. After the accumulated grease and waste material has been removed, the interceptor should be thoroughly checked to make certain that inlet, outlet and air relief ports are clear of obstructions.

DISPOSITION OF INTERCEPTED MATERIALS

Grease and other waste matter that has been removed from the interceptor should not be introduced into any drain, sewer, or natural body of water. This waste matter should be placed in proper containers for disposal. Where recovery of grease is desired, it can be handled in a manner suitable to the authorities.

Design and dimensions are subject to modification. Prices do not include applicable taxes. Visit **www.mifab.com** for the most recent product information.
MIFAB®, Inc., 1321 West 119th Street, Chicago, Illinois 60643-5109, USA Toll Free: 1-800-465-2736 • Fax: 1-773-341-3049
All sales subject to MIFAB's® Terms & Warranties. Please refer to inside front cover. sales@mifab.com • Canada Toll Free: 1-800-387-3880

MIFAB INTERCEPTOR SELECTION GUIDE

There are three main types of interceptors: grease, oil and solids. Each of them requires different considerations for sizing, operation and maintenance. The information provided will help the specifier select the correct interceptor for the application. A detailed explanation of the major components and features of each type of interceptor is also provided.

GREASE INTERCEPTORS

Grease, which also includes fats and oils, has historically caused problems in plumbing drainage systems. Grease easily adheres to the inner surface of most commonly used drainage piping material and over time will form into a hard crust as tough as baked clay. The rougher the inner surface of the pipe, the easier this adherence will occur. Grease is also a problem for sewage treatment plants as it taxes the bacterial process used to break down these complex compounds.

The purpose of a grease interceptor is to trap and store the suspended grease from the water passing through it. They are usually connected to kitchen sinks, floor drains, and any other plumbing fixtures in restaurants,hotels and institutions that discharge grease laden waste water. MIFAB's grease interceptors operate on the principle of separation by flotation.

As our environmental laws have become more restrictive and maintenance costs have increased, public sewer departments have responded by tightening the list of materials allowed to flow into their systems. Severe fines may be levied on those users found to be in violation. Grease that is removed from the drainage system as close as possible to its source and before it becomes contaminated with other material, can be sold to rendering companies and recycled into a variety of products. It can therefore become an economic asset rather than liability.

The specifying engineer should consider the following when specifying grease interceptors: construction / operation, flow control fitting, extensions, cover shrouds and draw-off valves, sizing, installation andmaintenance.

CONSTRUCTION / OPERATION

All of MIFAB's grease, oil and solids interceptors are manufactured with 10 gauge hot rolled steel that is welded together and coated with an electro-statically applied baked epoxy finish. The cover sealing gasket is manufactured with low durometer closed-cell neoprene with self-adhesive backing. The gasket is custom fitted to the interceptor body top rim ledge where it is an integral part of the body. Because of the gasket's thickness and density, it provides an ideal sealing environment for the lid. All of MIFAB's interceptors are supplied with the same gasket. All grease interceptors are supplied with a baffle system engineered to improve the grease/oil separation process. The baffle system is strategically located to direct inflow for maximum efficiency of the interceptor. Flow entering the interceptor is directed to the bottom by the baffle to avoid any disturbance of the previously accumulated surface layer of grease / oil in the device. The baffle also serves to reduce the velocity and surge of inflow, providing sufficient retention time for effective separation of the grease. The grease rises to the surface for manual or draw-off removal and the baffle is easy to remove for cleaning. The waste water is now relieved of over 90% of the fats, oils and greases and continues to flow through the interceptor into the drainage system. Many MIFAB grease interceptors bear the PDI (Plumbing and Drainage Institute) seal. This seal on MIFAB's grease interceptors proves that the designs and ratings marked on the interceptor have met or surpassed all standards established by PDI. All of MIFAB's PDI approved grease interceptors are supplied with external, vented flow control fittings to ensure maximum performance. A detailed description of flow control fittings is on page 198.

MIFAB FLOW CONTROL FITTING GUIDE

FLOW CONTROL FITTING APPLICATION:
Flow control fittings are furnished at no extra cost with all MIFAB® MI-G, MI-G-L MI-G-SD MI-G-SDH and MI-G-L-SDH grease interceptors. They are essential to achieve maximum efficiency.

FLOW CONTROL FITTING DESCRIPTION:
Flow control fittings ensure 90% or more grease retention efficiency of the interceptor. When consideration isn't given to the flow rate of the waste water to be handled, the actual flow rate through the interceptor usually exceeds its rated maximum. With such flow rate, the interceptor would be overloaded. Retention time within the unit would not be sufficient for maximum separation. The result would be low efficiency, and pollutants left in the waste water would pass through the interceptor, making the installation less than effective. When the flow is controlled by use of a MIFAB® flow control fitting so that it can never exceed the maximum rating of the interceptor, and the interceptor is cleaned on a regular basis, the maximum pollutant retention efficiency will be achieved and maintained.

All flow control fittings are built with an air intake and should be connected to the vent stack or vent not lower than the flow level of the highest drain serviced or terminated in a return bend at the same elevation outside of the building. A vented flow control fitting improves the efficiency of the grease interceptor by introducing air into the body of the interceptor. As the air bubbles rise to the surface, they are coated with grease. This process brings grease to the surface faster, and, as a result, increases the efficiency.

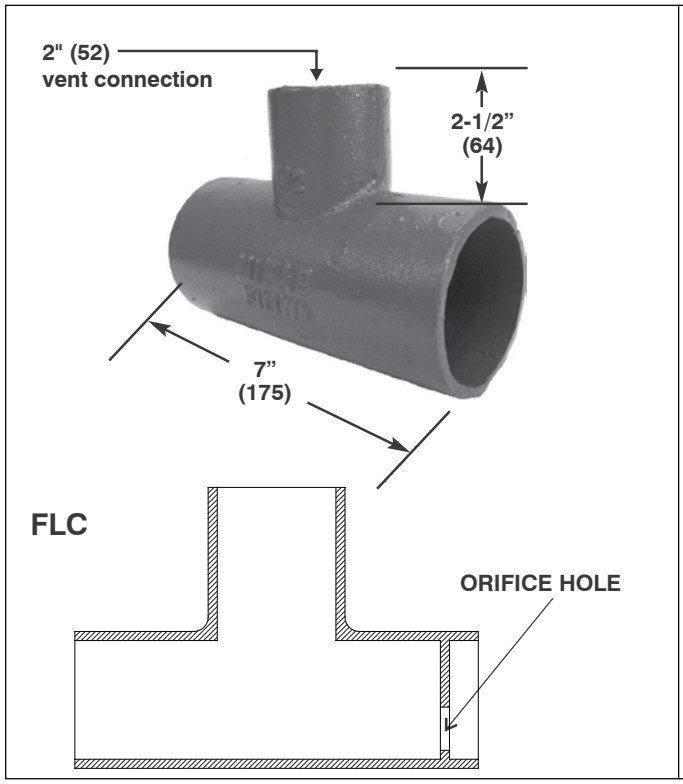

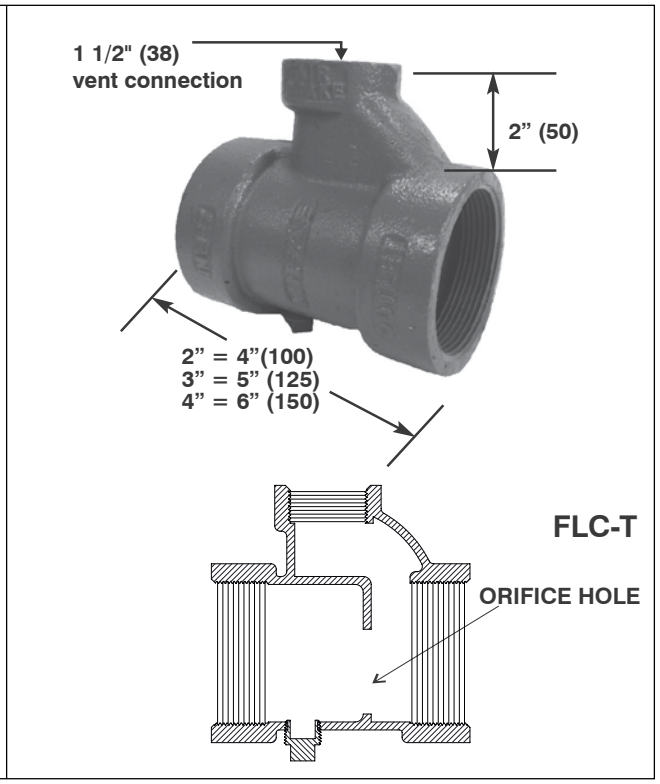

(DIMENSION) DENOTES MILLIMETRES				
MODEL NO.	FOR USE WITH MIFAB® INTERCEPTOR	NO HUB PIPE CONNECTION SIZE	ORIFICE SIZE	VENT CONNECTION SIZE
FLC-0	MI-G-0	2"(52)	.375" (9)	2"(50)
FLC-1	MI-G-1	2"(52)	.500" (13)	2"(50)
FLC-2	MI-G-2	2" (52)	.656" (16)	2"(50)
FLC-3	MI-G-3	2" (52)	.750" (19)	2"(50)
FLC-4	MI-G-4	3"(75)	1.000" (25)	2"(50)
FLC-5	MI-G-5	3" (75)	1.250" (31)	2"(50)
FLC-6	MI-G-6	3" (75)	1.250" (31)	2"(50)
FLC-7	MI-G-7	3" (75)	2.000" (50)	2"(50)
FLC-XL-0	XL-MI-G-0	4" (102)	2.000" (50)	2"(50)
FLC-XL-1	XL-MI-G-1	4" (102)	2.250" (57)	2" (50)

(DIMENSION) DENOTES MILLIMETRES				
MODEL NO.	FOR USE WITH MIFAB® INTERCEPTOR	THREADED PIPE CONNECTION SIZE	ORIFICE SIZE	VENT CONNECTION SIZE
FLC-T-0	MI-G-0	2"(52)	.375" (9)	1 1/2" (38)
FLC-T-1	MI-G-1	2"(52)	.500" (13)	1 1/2" (38)
FLC-T-2	MI-G-2	2" (52)	.656" (16)	1 1/2" (38)
FLC-T-3	MI-G-3	2" (52)	.750" (19)	1 1/2" (38)
FLC-T-4	MI-G-4	3" (75)	1.000" (25)	1 1/2" (38)
FLC-T-5	MI-G-5	3" (75)	1.250" (31)	1 1/2" (38)
FLC-T-6	MI-G-6	3" (75)	1.250" (31)	1 1/2" (38)
FLC-T-7	MI-G-7	3" (75)	2.000" (50)	1 1/2" (38)
FLCT-XL-0	XL-MI-G-0	4" (102)	2.000" (50)	1 1/2" (38)
FLCT-XL-1	XL-MI-G-1	4" (102)	2.250" (57)	1 1/2" (38)

Design and dimensions are subject to modification. Prices do not include applicable taxes. Visit **www.mifab.com** for the most recent product information.
MIFAB®, Inc., 1321 West 119th Street, Chicago, Illinois 60643-5109, USA Toll Free: 1-800-465-2736 • Fax: 1-773-341-3049
All sales subject to MIFAB's® Terms & Warranties. Please refer to inside front cover. sales@mifab.com • Canada Toll Free: 1-800-387-3880

EXTENSIONS AND COVER SHROUDS

EXTENSIONS

Extensions should be specified on grease and oil interceptors when the interceptor is buried into the ground, vertical adjustment of the interceptor is necessary to meet the drainage piping, and/or floor level access is required. Extension heights range from four inches to any maximum practical for serviceability. Extensions in excess of 20" are not recommended. One must consider the slope of the drainage piping from the fixtures to the inlet of the interceptor. Typically, one should allow a slope of 1/8" per foot in the drainage pipe. Therefore, there will be many installations, especially with large interceptors, where the sloped drainage pipe ends up below the inlet connection. An extension is added to the top of the interceptor so that the inlet can be lowered to meet the incoming drainage pipe and the lid of the interceptor can be extended to floor level. MIFAB offers three different kinds of extensions: integral, bolt on and cover shrouds. An integral extension is specified by expanding the "C" dimension on the interceptor. The "C" dimension is from the middle of the inlet and outlet to the top of the interceptor. One would specify a "C" dimension to meet the job requirements and the interceptor will be manufactured to that specification. The extension is incorporated into the production of the interceptor to produce a seamless, integral interceptor. A second method of providing an extension is a bolt on design. In this example, a top is manufactured out of the same material as the body. The extension is secured to the body by means of "C lock" devices bearing against its base flange, compressing the sealing gasket to complete the union. The regular lid is bolted to the extension top in the same manner as it would be to the body of a standard interceptor.

COVER SHROUDS

In installations where the exact extension dimension required is unknown or where little notice has been provided to the installer advising of the need for an extension; integral and bolt on extensions are impractical due to the time necessary for their fabrication. MIFAB's nationwide network of manufacturer's representatives stock cover shrouds for immediate shipment to jobsites when these situations occur. The cover shroud is adjustable and is recessed into the slab to house the interceptor.Cover shrouds incorporate either standard or draw-off grease interceptors mounted on adjustable elevation cradles in either open or closed bottom housings with non-skid floor level lids. Cover shrouds are particularly important where below floor level installation of draw-off grease interceptors is required, because such models cannot be installed independently with tops at the finished floor level. Specify MIFAB MI-CS Series for use with the MI-G Series grease interceptors and MIFAB MI-CSD Series for use with the MI-G-SD and MI-G-SDH semi-automatic draw off grease interceptors.

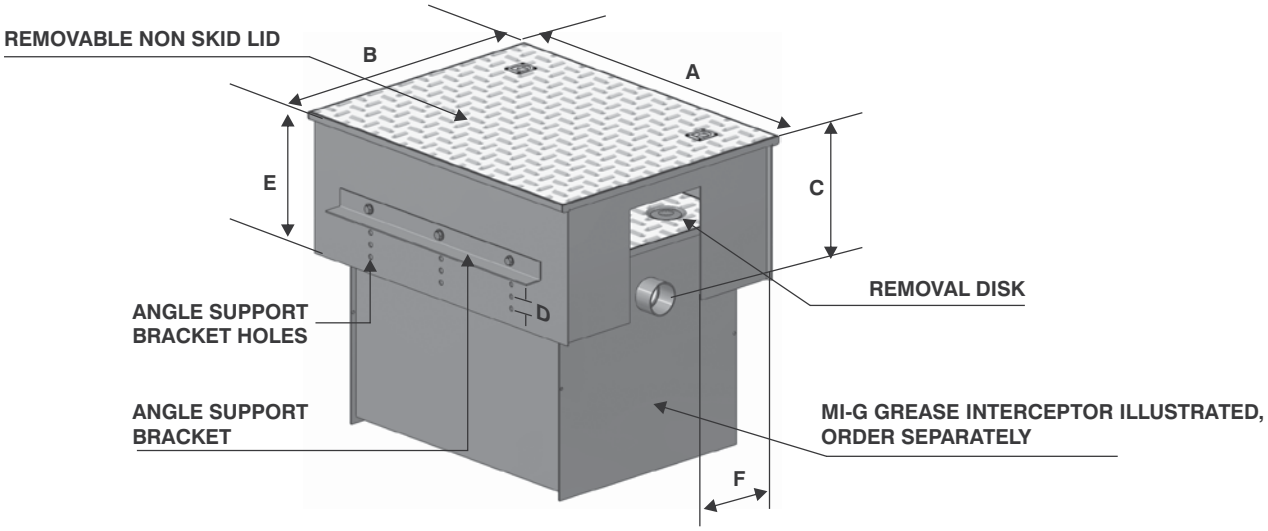

(MI-CS COVER SHROUD ILLUSTRATED)

MIFAB INTERCEPTOR SELECTION GUIDE (Cont'd)

DRAW-OFF VALVE

All of MIFAB's semi-automatic grease interceptors are manufactured with draw-off valves and are preferred in areas where excessive amounts of grease accumulates because they make the cleaning process easier. The draw-off valve is a gate valve that is connected to the outlet of the interceptor via a pipe nipple. When the accumulated grease is ready to be drawn off, the pipe cap on the top of the interceptor is removed and the draw-off hose is attached with a hose clamp. After warming the interceptor with hot water from the fixture to liquefy the accumulated grease, the draw-off valve is closed to block water escaping through the outlet. Water from the fixture enters at a low flow rate to elevate the liquefied grease into the draw-off pyramid and through the hose to the disposal container. When clear water appears at the hose outlet, the draw-off valve is opened to drop the water level in the interceptor for normal operation. This method of cleaning is more sanitary that the typical manual method. Specify MIFAB Series MI-G-SD, MI-G-SDH and MI-G-L-SDH Series of semi-automatic grease interceptors.

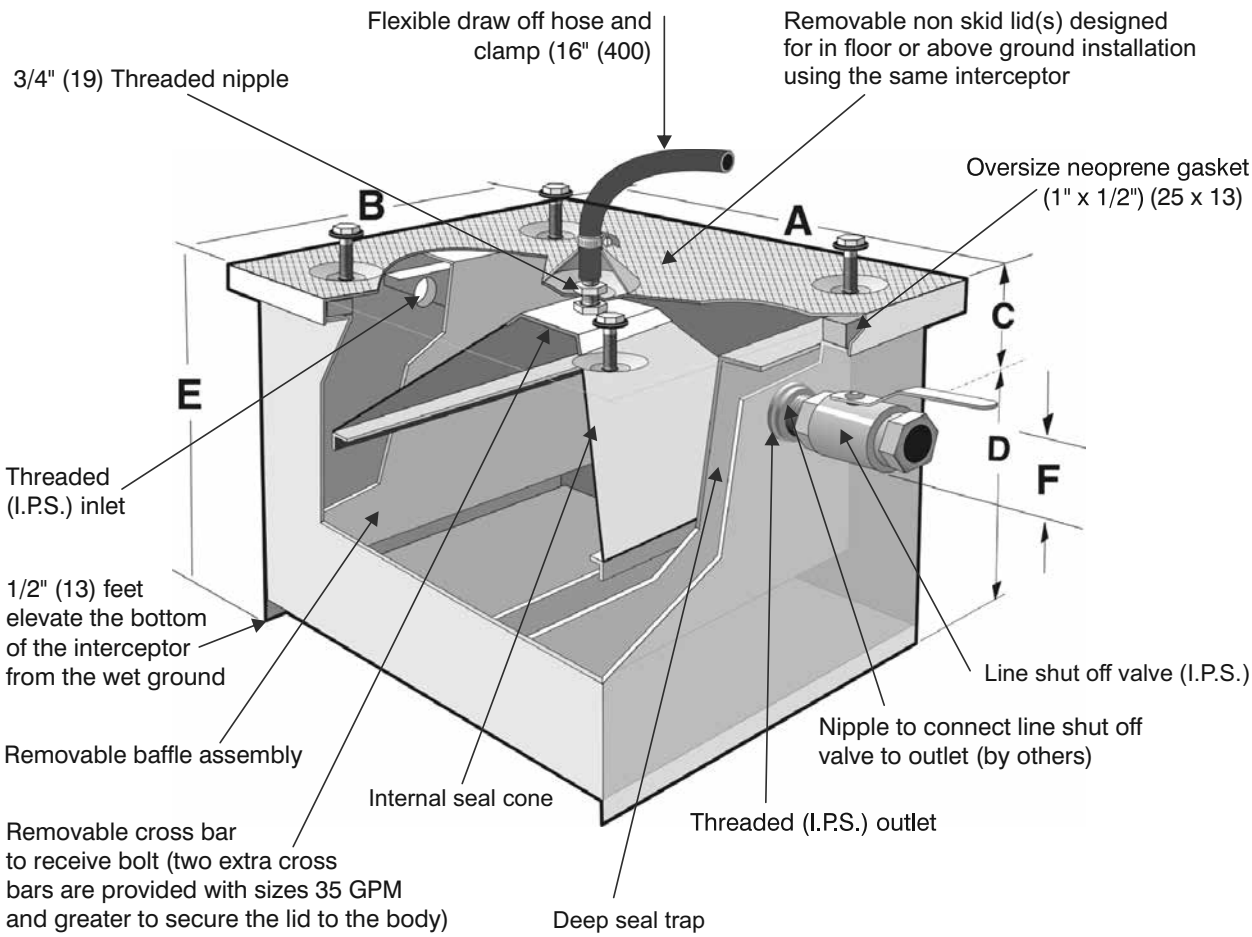

(MI-G-SDH SEMI-AUTOMATIC GREASE INTERCEPTOR ILLUSTRATED)

Design and dimensions are subject to modification. Prices do not include applicable taxes. Visit **www.mifab.com** for the most recent product information.
MIFAB®, Inc., 1321 West 119th Street, Chicago, Illinois 60643-5109, USA
Toll Free: 1-800-465-2736 • Fax: 1-773-341-3049
sales@mifab.com • Canada Toll Free: 1-800-387-3880
All sales subject to MIFAB's® Terms & Warranties. Please refer to inside front cover.

HLA SERIES — HIGH LEVEL ALARM

The purpose of the High Level Alarm is to monitor and send an audible and visual alarm when the interceptor's grease or oil capacity is approximately 75% full.

High level alarm systems can be installed on any MIFAB grease or oil interceptors to allow the customer to monitor grease and oil levels. This allows the interceptor to be maintained when required.

The -HLA option includes an alarm control box that is weatherproof rated NEMA 4/4X, 6' 120VAC power cord, 360° viewable alarm light, 85db @ 10' solid tone alarm, and a silence and test button that is to be mounted to the nearest structure. It also includes a float switch that is mounted inside the interceptor for oil or grease level detection and is connected to the alarm control box.

List Price for -HLA is $17,269.00

Note: The -HLA is not factory installed by MIFAB. It is shipped loose with the interceptor and is to be connected to the grease / oil interceptor on site.

LD OPTION — LEAK DETECTION

The purpose of the Leak Detection system is to monitor any leaks that may occur through the first wall of a double wall interceptor.

The Leak Detection system can only be used in a double wall construction. It is typically used in high risk applications where the seal of the interceptor needs to be monitored.

The Leak Detection option includes an alarm control box that is weatherproof rated NEMA 4/4X, 6' 120VAC power cord, 360° viewable alarm light, 85db @ 10' solid tone alarm, and a silence and test button that is to be mounted to the nearest structure. It also includes a pressure switch that is made from 316 stainless steel and is mounted inside the interceptor for oil or grease level detection and is connected to the alarm control box.

List Price for -LD is $17,269.00

Note: The -LD is not factory installed by MIFAB. It is shipped loose with the interceptor and is to be connected to the grease / oil interceptor on site.

DS OPTION — ENZYME DOSING PUMP

The purpose of the Enzyme Dosing pump is to release grease and bacteria eating enzymes into the grease interceptor to consume the accumulated grease.

The Enzyme Dosing pump can be ordered with any MIFAB grease interceptor. It is ideal for grease interceptors that are located in high volume kitchens.

The Enzyme Dosing pump includes a 120V fully automatic dosing pump with a programmable 24 hour timer and dosage run time. The system also includes 15' of Poly tubing.

List Price for ENZYME DOSING pump is $5,517.00

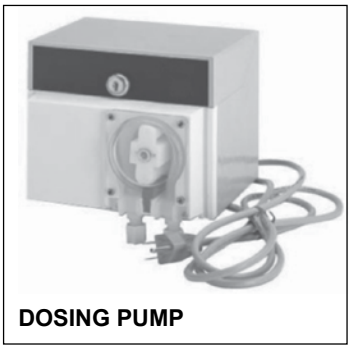

DS OPTIONAL VARIATIONS:		
SUFFIX	**DESCRIPTION**	**LIST PRICE**
-5ENZ	Bacterial enzyme liquid (5 gallon bucket) (Part # is MI-G-DOS-E5)	**$ 6114.00**
-BB	Timer battery backup operated	**$ 5358.00**

MIFAB GREASE INTERCEPTOR INSTALLATION AND MAINTENANCE GUIDE

INSTALLATION CONSIDERATIONS

Install interceptor as close as practical to fixture or fixtures being served, see figures A2.5.1 through A2.5.5. The interceptor may be set on the floor, partially recessed in the floor, with top flush with the floor, or fully recessed below the floor to suit piping and structural conditions. Anticipate sufficient clearance for removal of interceptor cover for cleaning. Avoid installation wherein long runs of pipe (exceeding 25 feet (7500) are necessary to reach interceptor. This precaution will preclude the possibility of pipeline becoming clogged with congealed grease that will collect before reaching the grease interceptor. Do not install grease interceptor in waste line from garbage grinder. Garbage grinder waste must by-pass interceptor, for rapid accumulation of solid matter will greatly reduce grease interceptor efficiency preventing operation in compliance with rated capacity

FLOW CONTROL

The flow control fitting furnished with PDI certified interceptors must be installed ahead of interceptor in the waste line beyond the last connection from the fixture and as close as possible to the underside of lowest fixture.When waste of two or more sinks or fixtures are combined to be served by one interceptor, a single flow control fitting should be used. Air intake for flow control may terminate under sink drain board as high as possible to prevent overflow or terminate in a return bend at the same height and on outside of building. When fixture is individually trapped and back-vented, air intake may intersect vent stack. All installation recommendations subject to approval of code authority.

VENTING

Grease interceptors must have a vented waste, sized in accordance with code requirements for venting traps to retain water seal and prevent siphoning.

MULTIPLE FIXTURE INSTALLATION

One interceptor to serve multiple fixtures is recommended only where fixtures are located close together. In such installations, each fixture should be individually trapped and back-vented.

MAINTENANCE

GENERAL CONSIDERATIONS

To obtain optimum operating efficiency of a properly sized and installed PDI certified grease interceptor, a regular schedule of maintenance must be adhered to. All PDI certified grease interceptors are furnished with manufacturer's operating and maintenance instructions, which must be followed to ensure efficient satisfactory operation.

CLEANING

All grease interceptors must be cleaned regularly. The frequency of grease removal is dependent upon the capacity of the interceptor and the quantity of grease in the waste water. Grease removal intervals may therefore vary from once a week to once in several weeks. When the grease removal interval has been determined for a specific installation, regular cleaning at that interval is necessary to maintain the rated efficiency of the interceptor. After the accumulated grease and waste material has been removed, the interceptor should be thoroughly checked to make certain that inlet, outlet and air relief ports are clear of obstructions.

DISPOSITION OF INTERCEPTED MATERIALS

Grease and other waste matter that has been removed from the interceptor should not be introduced into any drain, sewer, or natural body of water. This waste matter should be placed in proper containers for disposal. Where recovery of grease is desired, it can be handled in a manner suitable to the authorities.

INSTALLATION DIAGRAMS

Figures A2.5.1 through A2.5.5 are included to illustrate various grease interceptor installations normally encountered in domestic, commercial and institutional systems. These figures will serve as a guide to practical application of grease interceptors.

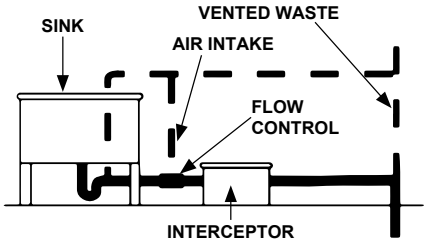

Fig. A2.5.1 Interceptor Serving Trapped and Vented Sink - Flow Control Air Intake Intersects Vent.

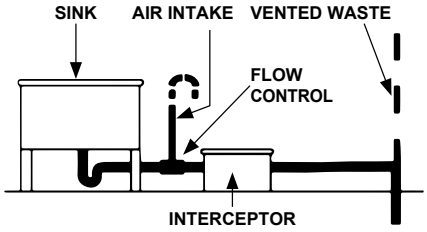

Fig. A2.5.2 Interceptor Serving Sink - Flow Control Air Intake Terminates in a Return Bend above Flood Level.

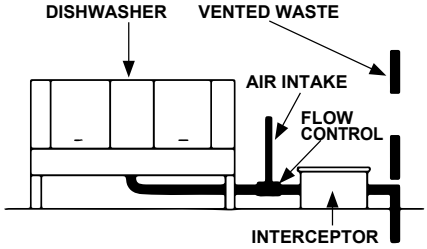

Fig. A2.5.3 Interceptor Serving Dishwasher - Flow Control Air Intake Terminates Above Flood Level.

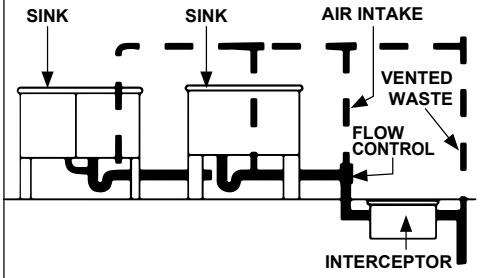

Fig. A2.5.4 Interceptor Serving Two Individually Trapped and Vented Sinks - Flow Control Air Intake Intersects Vent.

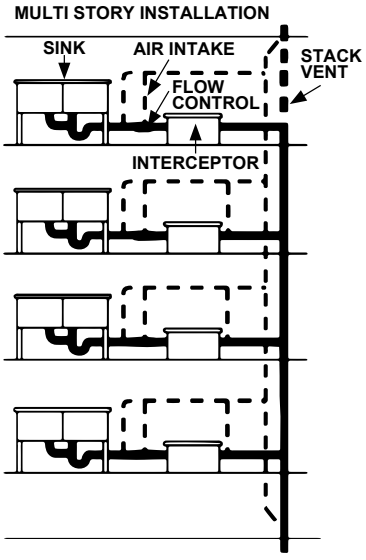

Fig. A2.5.5 Interceptor Serving Trapped & Vented Sinks - Flow Control Air Intakes Intersect Vent.

Design and dimensions are subject to modification. Prices do not include applicable taxes. Visit **www.mifab.com** for the most recent product information.
MIFAB®, Inc., 1321 West 119th Street, Chicago, Illinois 60643-5109, USA
Toll Free: 1-800-465-2736 • Fax: 1-773-341-3049
sales@mifab.com • Canada Toll Free: 1-800-387-3880
All sales subject to MIFAB's® Terms & Warranties. Please refer to inside front cover.

MIFAB INTERCEPTOR SELECTION GUIDE (Cont'd)

DISHWASHERS

A separate grease interceptor is recommended for each commercial dishwasher. The size of the interceptor is determined by the GPM discharge rate of the dishwasher as specified by the manufacturer.

FLOOR DRAINS

Many local plumbing inspectors require that grease laden wastewater flowing into floor drains must flow through a grease interceptor before draining into the sanitary sewer system. In these instances, the flow control fitting must be installed underground, before the inlet to the interceptor, to moderate the flow from the floor drains and to ensure maximum performance. Consideration should be given to providing access to the flow control fitting in these installations for proper cleaning and maintenance. The MIFAB MI-CSD extended cover shroud is best used in these situations because it is long enough to house the grease interceptor and the flow control fitting beside the inlet. A hole can be cut into the lid of the cover shroud to allow the vent piping to connect to the top of the flow control fitting.

SOLIDS INTERCEPTORS

The interception and retention of solids cannot be overlooked. Materials such as lint, hair , grindings, ceramic waste, plaster, dental wastes, aquarium and other small gravel, jewels and precious metals are a few solids that should pass through a solids interceptor before entering the waste drain line. Deleterious solids should be intercepted to prevent clogging of the drainage lines and valuable materials require interception for retrieval. MIFAB manufactures a complete line of solids interceptors designed to handle any waterborne solids. Most often these interceptors replace the standard traps of the fixtures they serve. The solids interceptor with a low inlet and high outlet becomes the fixture trap. Solids interceptors are manufactured with easily removable strainers or sediment baskets that serve to retain the intercepted solids while allowing water to flow through. It is good engineering practice to specify a solids interceptor immediately before a grease interceptor so that all debris and solid wastes are caught in the solids interceptor before they enter the grease interceptor. This will ensure that the grease interceptor is not filled as quickly with solid wastes that will only impair its efficiency. In addition, most foul odors from grease interceptors are from rotting solids, not from the grease itself. Proper separation of these solids will reduce the odor problem typically experienced with grease interceptors filled with rotting solids. See MIFAB's MI-SOLID, MI-LINT, MI-HAIR and MI-FISH Series of solids interceptors.

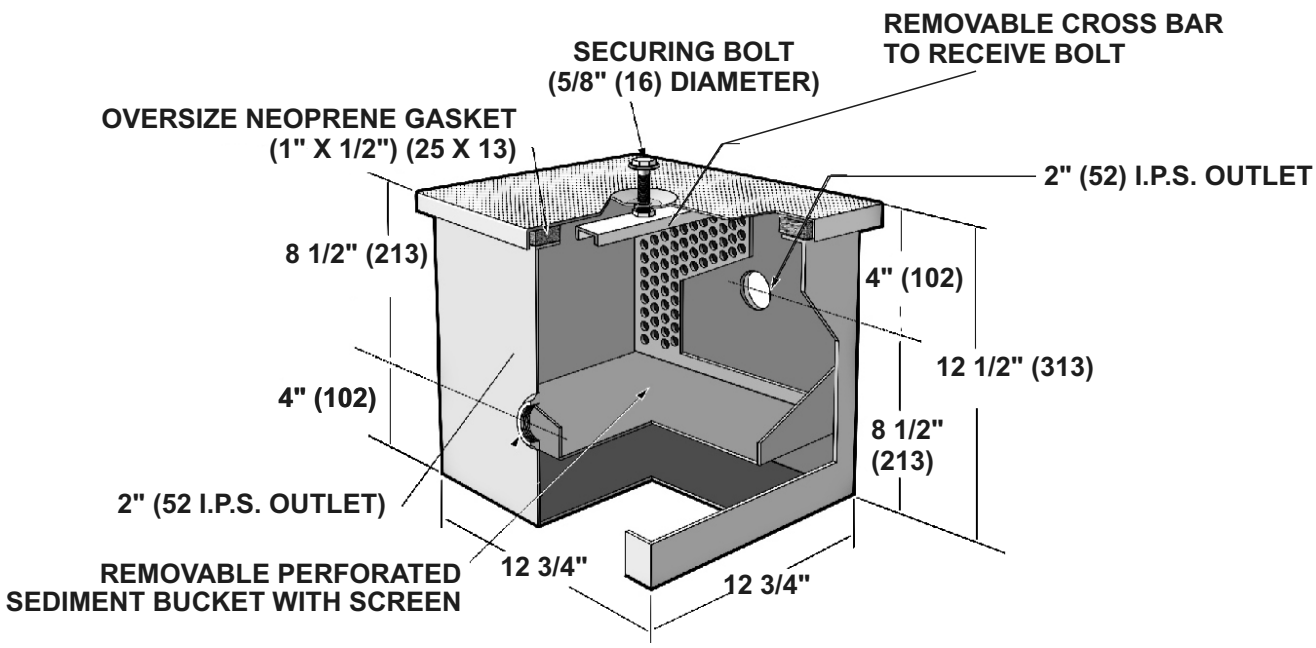

(MI-SOLID -M ILLUSTRATED)

MIFAB OIL INTERCEPTOR SELECTION GUIDE

APPLICATION:
MIFAB® oil interceptors are designed for use in drain lines where oils, sediment and other volatile liquids are found. These drain lines may be from areas in parking garages, machine shops, service stations, aircraft hangars, industrial and manufacturing facilities.

DESIGN:
MIFAB® oil interceptors are designed to protect against water pollution by preventing oils and sediment in waste water from entering drain lines. The design allows intercepted oils to be drawn-off automatically for storage continuously during operation. Sediment should be removed from the interceptor at regular intervals.

SIZING:
1. Determine maximum volume of waste water in G.P.M. or L.P.M., by summing volumes of all discharging fixtures that may enter the drain lines at one time.
2. Select oil interceptor with flow rating equal to peak volume in G.P.M. or L.P.M. (see table on shop drawing.) Provide storage tank capable of handling the volume.

TYPICAL CODE REGULATIONS

Vehicle servicing. When an oil interceptor is installed in an automobile, truck, bus, or tractor garage or in a service station or repair shop with facilities for motor or transmission overhauling, it must have a minimum static water depth of 24 inches (600) below the invert of the interceptor outlet and a minimum static water capacity of 6 cubic feet. This regulation applies to facilities where not more than three vehicles are serviced. For each additional vehicle up to and including ten, 1 cubic foot of static capacity shall be added. For each vehicle over ten, an additional 0.25 cubic foot shall be added.

Vehicle storage and servicing. Where motor vehicles are serviced and stored, an oil interceptor shall be installed with a static water capacity of 1 cubic foot for every 100 square feet of area to be drained. The oil interceptor shall have a minimum static water level of 6 cubic feet

Mechanical car washing. In facilities designed especially for mechanical washing of motor vehicles, a sand and gravel interceptor shall be installed to receive the waste water from all washing facilities. A minimum static water level of 2.5 feet and a minimum static water capacity of 50 cubic feet shall be maintained. Where motor cleaning services are rendered at mechanical car washing facilities, an oil interceptor shall be installed in that section of the drainage system which receives waste water from this operation.

VEHICLE STORAGE.
In motor vehicle storage facilities, a combination interceptor-drain shall be installed with a static water level of 1 gallon for every 100 square feet of area to be drained.

MANUAL CAR WASHING.
In a one-car washing facility, a combination interceptor-drain shall be installed with a minimum static water capacity of 30 gallons.

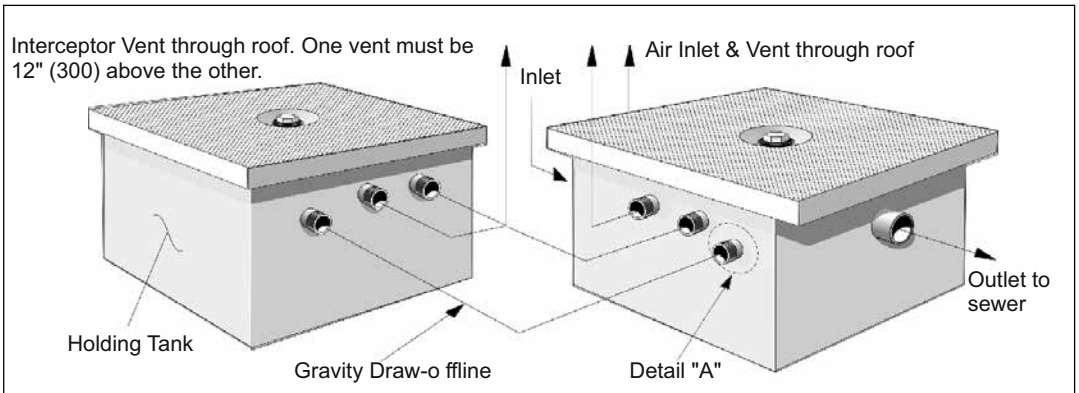

GRAVITY OIL DRAW-OFF

DRAW-OFF CONNECTIONS
Connect to Holding Tank which must be vented

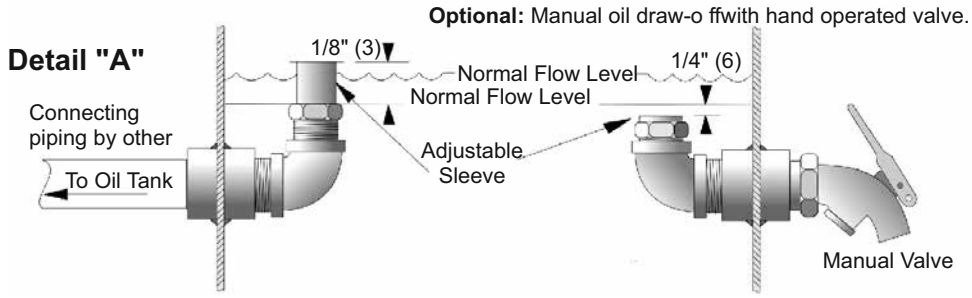

N.B. Operate manual draw-o ffonly when flow has stopped through interceptor.

(Dimension) Denotes Millimetres

OIL DRAW-OFF
Oil draw-off funnel is adjustable to the gravity height of oil and gallon per minute flow. It leads in to oil discharge pipe, from which suitable disposal of oil can be made in the most economical way.
After interceptor is installed, establish operating water level by running water through interceptor at maximum flow rate expected. Adjust vertical draw-off pipe 1/8" (3) to 1/4"(6) above water line. Periodic checking of this level after interceptor is in operation will assure proper functioning of the oil draw-off . If drawn off oil contains any water, raise vertical draw-off pipe until only oil flows from interceptor.

Design and dimensions are subject to modification. Prices do not include applicable taxes. Visit **www.mifab.com** for the most recent product information.
MIFAB®, Inc., 1321 West 119th Street, Chicago, Illinois 60643-5109, USA Toll Free: 1-800-465-2736 • Fax: 1-773-341-3049
All sales subject to MIFAB's® Terms & Warranties. Please refer to inside front cover. sales@mifab.com • Canada Toll Free: 1-800-387-3880

MI-G HYDRO MECHANICAL GREASE INTERCEPTOR MI-G

NOTE: MI-G and MI-G-L Series of grease interceptors are shipped with an external vented flow control fitting packed within interceptor.

FLC (No Hub) Flow Control Fitting (See page 198)

MIFAB is a recognized industry leader in the field of interceptor design and production.

As such, we offer a variety of specialized options and site-specific applications too numerous to list in this price guide.
For features such as sacrificial anode packs, all stainless steel construction and a variety of other special features, please see our Engineering Catalog or consult your local code official.

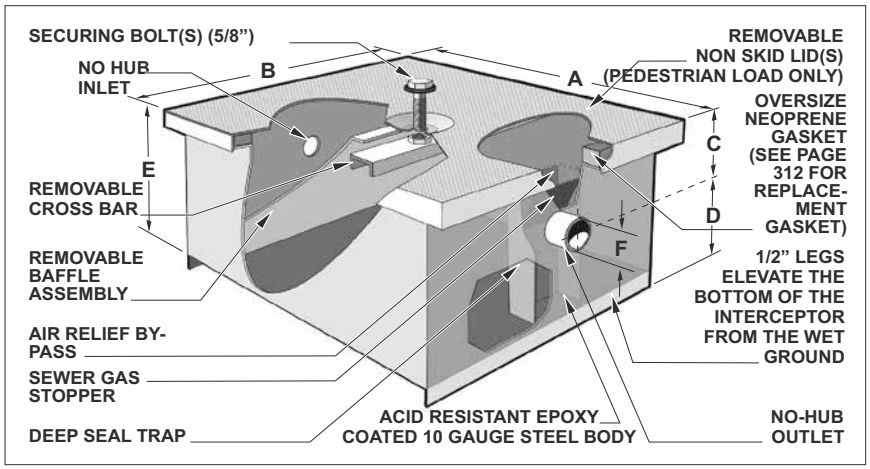

MODEL NO.	US GPM	CAP. LBS.	LIQUID HOLDING CAP. (U.S.G.)	A IN	B IN	C IN	D IN	E IN	F IN	NO. OF LIDS	NO. OF BOLTS
MI-G-0	4	8	4.43	16.75	11.25	2.5	8.5	11.0	2	1	1
MI-G-1	7	14	6.00	17.75	13.75	3.5	8.5	12.0	2	1	1
MI-G-2	10	20	9.74	21.25	15.75	3.5	9.5	13.0	2	1	1
MI-G-3	15	30	13.59	23.75	15.75	3.5	11.5	15.0	2	1	1
MI-G-4	20	40	16.18	23.75	15.75	3.5	14.0	17.5	3	1	1
MI-G-5	25	50	23.34	27.75	18.75	3.5	14.0	17.5	3	1	1
MI-G-6	35	70	41.31	31.25	23.75	5.5	16.5	22.0	3	1	2 cross bars, 4 bolts
MI-G-7	50	100	46.82	31.25	23.75	5.5	18.5	24.0	3	1	2 cross bars, 4 bolts

NOTE: The "A" and "B" dimensions represent the largest dimension of the interceptor. Since the lid overhangs the body by 1/2" on all sides, deduct 1" from the stated dimensions in the charts above to determine the actual body length & width.

MODEL NUMBER	US GPM	LIST PRICE	SEDIMENT BUCKET "-SB"	BOLT ON EXTENSION (PER 6") (ADD)	ADDITIONAL "-C" UP TO 6" (ADD)	PER 1" OF "C" DIM. OVER "6" (ADD)	ANCHOR FLANGE "-FL"	FLANGE & MEMBRANE CLAMP "-FLM"	HEAVY DUTY REINFORCED LID "-HD" 10,000 LBS. LIVE LOAD (ADD)	TILE RECESS (1/8") "-TL" (ADD)
MI-G-0	4	$3,428.00	$2,343.00	$5,565.00	$5,565.00	$310.00	$1,949.00	$2,344.00	$7,245.00	$6,960.00
MI-G-1	7	$4,751.00	$2,343.00	$5,565.00	$5,565.00	$310.00	$1,949.00	$2,344.00	$7,980.00	$6,960.00
MI-G-2	10	$5,589.00	$2,343.00	$6,239.00	$6,239.00	$316.00	$1,949.00	$2,344.00	$9,752.00	$6,960.00
MI-G-3	15	$8,272.00	$2,343.00	$6,409.00	$6,409.00	$355.00	$1,949.00	$2,344.00	$11,156.00	$8,441.00
MI-G-4	20	$10,121.00	$2,400.00	$6,409.00	$6,409.00	$400.00	$2,103.00	$2,344.00	$11,288.00	$9,440.00
MI-G-5	25	$10,901.00	$2,536.00	$7,286.00	$7,286.00	$456.00	$2,188.00	$2,613.00	$11,919.00	$10,908.00
MI-G-6	35	$14,055.00	$2,714.00	$7,659.00	$7,659.00	$499.00	$2,301.00	$2,712.00	$16,399.00	$13,390.00
MI-G-7	50	$18,612.00	$4,060.00	$8,281.00	$8,281.00	$576.00	$2,344.00	$3,086.00	$17,995.00	$18,604.00

Suffix -DP for dosing pump - Add (**$5,517.00** all Models). **Suffix -HLA,** high level alarm - Add (**$17,269.00** all Models). **Suffix -AL,** aluminum lid - (MI-G-0 to MI-G-3, **$1,781.00**), (MI-G-4 to MI-G-7, **$2,495.00**). **Suffix -T** for threaded inlet and outlet connections - Add **$175.00** for 2", **$349.00** for 3". **Suffix -AP** for anode pack - **$3,663.00**

MI-G-L HYDRO MECHANICAL GREASE INTERCEPTOR - LOW ROUGH-IN MI-G-L

Sample box to be installed on outlet side of interceptor
See page 326 for List Prices

Effluent Sample Box
(SUFFIX - SMPB)

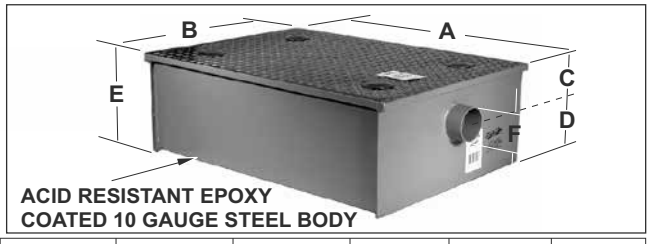

MODEL NO.	US GPM	CAP. LBS.	LIQUID HOLDING CAP. (U.S.G.)	A IN	B IN	C IN	D IN	E IN	F IN	NO. OF LIDS	NO. OF BOLTS
MI-G-L-20	20	40	16.76	34	24	4	7	11	3	1	4
MI-G-L-35	35	70	24.76	42	28	4	7	11	3	2	8
MI-G-L-50	50	100	29.33	46	30	4	7	11	3	2	8

MODEL NUMBER	US GPM	LIST PRICE	SEDIMENT BUCKET "-SB"	ANCHOR FLANGE "-FL"	FLANGE & MEMBRANE CLAMP "-FLM"	HEAVY DUTY REINFORCED LID "-HD" 10,000 LBS. LIVE LOAD (ADD)
MI-G-L-20	20	$13,647.00	$1,857.00	$2,090.00	$2,328.00	$20,020.00
MI-G-L-35	35	$17,571.00	$2,556.00	$2,276.00	$2,674.00	$26,628.00
MI-G-L-50	50	$29,772.00	$2,630.00	$2,324.00	$3,079.00	$34,260.00

NOTE: The "C" dimension is from the center of the inlet/outlet (invert) to the top of the interceptor. Inlet & outlet "C" dimensions are always the same.

XL-MI-G 75 TO 750 G.P.M. LARGE CAPACITY GREASE INTERCEPTOR XL-MI-G

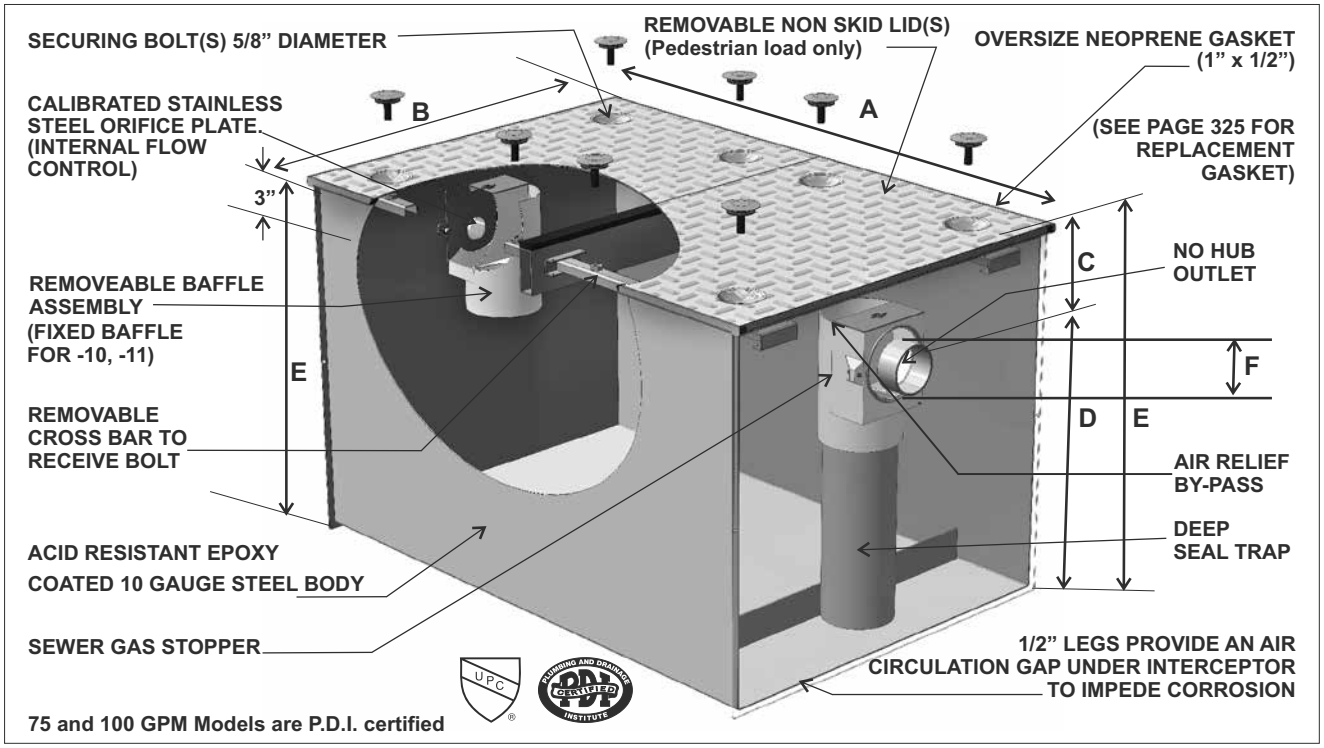

MIFAB® is a recognized industry leader in the field of interceptor design and production.
As such, we offer a variety of specialized options and site-specific applications too numerous to list in this price guide. For features such as sacrificial anode packs, all stainless steel construction and a variety of other special features, please see our Engineering Catalog or consult your local MIFAB® representative.

MODEL NO.	US GPM	CAP. LBS.	LIQUID HOLDING CAPACITY (U.S.G.)	A IN	B IN	C IN	D IN	E IN	F IN	NO. OF LIDS	NO. OF BOLTS
XL-MI-G-0	75	150	108.05	42	28	6	26	32	4	2	8
XL-MI-G-1	100	200	192.73	42	37	8	22	30	4	2	8
XL-MI-G-2	125	250	226.91	50	38	8	24	32	4	2	8
XL-MI-G-3	150	300	264.61	56	39	8	24	32	4	3	12
XL-MI-G-4	200	400	395.64	70	44	10	34	44	4	6	24
XL-MI-G-5	250	500	501.00	75	46	10	38	48	4	6	24
XL-MI-G-6	300	600	579.87	77	49	12	40	52	4	6	24
XL-MI-G-7	350	700	612.18	80	51	12	40	52	6	6	24
XL-MI-G-8	400	800	805.09	84	56	14	44	58	6	8	32
XL-MI-G-9	500	1000	1172.34	92	61	14	54	68	6	8	32
XL-MI-G-10	600	1200	1807.79	102	74	14	62	76	8	9	36
XL-MI-G-11	750	1500	2580.71	108	76	14	66	80	8	9	36

NOTE: The "A" and "B" dimensions represent the largest dimension of the interceptor. Since the lid overhangs the body by 1/2" on all sides, deduct 1" from the stated dimensions in the charts below to determine the actual body length & width.

NOTE: The"C" dimension is from the center of the inlet/outlet (invert) to the top of the interceptor. Inlet & outlet "C"dimensions are always the same.

MODEL NUMBER	US GPM	LIST PRICE	SEDIMENT BUCKET "-SB"	BOLT ON EXTENSION (PER 10") (ADD)	ADDITIONAL "-C" UP TO 10" (ADD)	PER 1" OF "C" DIM. OVER "10" (ADD)	ANCHOR FLANGE "-FL"	FLANGE & MEMBRANE CLAMP "-FLM"	HEAVY DUTY REINFORCED LID "-HD" 10,000 LBS. LIVE LOAD (ADD)
XL-MI-G-0	75	$37,503.00	$4,464.00	$4,458.00	$4,458.00	$355.00	$2,738.00	$4,976.00	$11,919.00
XL-MI-G-1	100	$42,202.00	$4,872.00	$5,007.00	$5,007.00	$380.00	$3,063.00	$5,565.00	$16,399.00
XL-MI-G-2	125	$44,539.00	$5,091.00	$5,296.00	$5,296.00	$410.00	$3,672.00	$6,220.00	$17,995.00
XL-MI-G-3	150	$46,871.00	$5,115.00	$5,571.00	$5,571.00	$434.00	$4,281.00	$6,888.00	$21,057.00
XL-MI-G-4	200	$67,972.00	$5,372.00	$10,023.00	$10,023.00	$456.00	$4,584.00	$8,051.00	$24,017.00
XL-MI-G-5	250	$79,146.00	$5,670.00	$12,449.00	$12,449.00	$499.00	$6,113.00	$10,854.00	$33,146.00
XL-MI-G-6	300	$93,281.00	$6,689.00	$14,877.00	$14,877.00	$561.00	$6,918.00	$11,708.00	$42,551.00
XL-MI-G-7	350	$103,602.00	$7,159.00	$17,474.00	$17,474.00	$628.00	$7,729.00	$12,975.00	$50,176.00
XL-MI-G-8	400	$114,138.00	$8,167.00	$20,158.00	$20,158.00	$690.00	$8,086.00	$13,595.00	$57,784.00
XL-MI-G-9	500	$135,096.00	$8,489.00	$25,977.00	$25,977.00	$747.00	$9,178.00	$15,430.00	$70,600.00
XL-MI-G-10	600	$158,550.00	$9,635.00	$29,925.00	$29,925.00	$998.00	$11,130.00	$15,750.00	$85,050.00
XL-MI-G-11	750	$179,550.00	$10,702.00	$36,540.00	$36,540.00	$1,418.00	$13,860.00	$22,050.00	$112,350.00

Suffix -DP for dosing pump - Add (**$5,517.00** all Models). **Suffix -HLA,** high level alarm - Add (**$17,269.00** all Models).
Suffix -AL, aluminum lid(s) - Add (**$7,053.00** all other Models). **Suffix -T** for threaded inlet and outlet connections - Add **$175.00** for 2", **$349.00** for 3", **$698.00** for 4", **$873.00** for 6" and **$1048.00** for 8". **Suffix -AP** for anode pack - **$3,663.00**

Design and dimensions are subject to modification. Prices do not include applicable taxes. Visit **www.mifab.com** for the most recent product information.
MIFAB®, Inc., 1321 West 119th Street, Chicago, Illinois 60643-5109, USA
Toll Free: 1-800-465-2736 • Fax: 1-773-341-3049
sales@mifab.com • Canada Toll Free: 1-800-387-3880
All sales subject to MIFAB's® Terms & Warranties. Please refer to inside front cover.

MI-G-SS 4 TO 50 G.P.M. STAINLESS STEEL GREASE INTERCEPTOR MI-G-SS

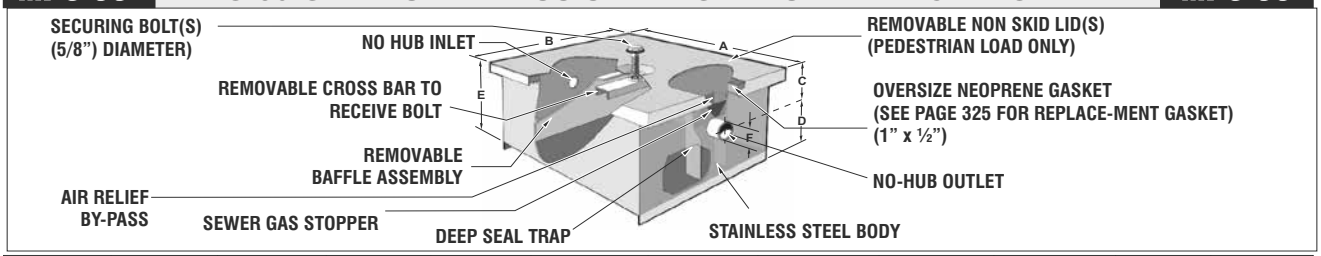

MODEL NO.	US GPM	CAP. LBS.	LIQUID HOLDING CAP. (U.S.G.)	A IN	B IN	C IN	D IN	E IN	F IN	NO. OF LIDS	NO. OF BOLTS
MI-G-0-SS	4	8	4.43	16.75	11.25	2.5	8.5	11.0	2	1	1
MI-G-1-SS	7	14	6.00	17.75	13.75	3.5	8.5	12.0	2	1	1
MI-G-2-SS	10	20	9.74	21.25	15.75	3.5	9.5	13.0	2	1	1
MI-G-3-SS	15	30	13.59	23.75	15.75	3.5	11.5	15.0	2	1	1
MI-G-4-SS	20	40	16.18	23.75	15.75	3.5	14.0	17.5	3	1	1
MI-G-5-SS	25	50	23.34	27.75	18.75	3.5	14.0	17.5	3	1	1
MI-G-6-SS	35	70	41.31	31.25	23.75	5.5	16.5	22.0	3	1	4
MI-G-7-SS	50	100	46.82	31.25	23.75	5.5	18.5	24.0	3	1	4

NOTE: The "A" and "B" dimensions represent the largest dimension of the interceptor. Since the lid overhangs the body by 1/2" on all sides, deduct 1" from the stated dimensions in the charts above to determine the actual body length & width.

MODEL NUMBER	US GPM	LIST PRICE	SEDIMENT BUCKET "-SB"	BOLT ON EXTENSION (PER 6") (ADD)	ADDITIONAL "-C" UP TO 6" (ADD)	PER 1" OF "C" DIM. OVER "6" (ADD)	ANCHOR FLANGE "-FL"	FLANGE & MEMBRANE CLAMP "-FLM"	HEAVY DUTY REINFORCED LID "-HD" 10,000 LBS. LIVE LOAD (ADD)	TILE RECESS 1/8" "-TL" (ADD)
MI-G-0-SS	4	$8,562.00	$5,061.00	$15,587.00	$15,587.00	$778.00	$4,870.00	$5,858.00	$16,836.00	$6,960.00
MI-G-1-SS	7	$11,883.00	$5,061.00	$15,587.00	$15,587.00	$778.00	$4,870.00	$5,858.00	$18,855.00	$6,960.00
MI-G-2-SS	10	$13,957.00	$5,061.00	$15,587.00	$15,587.00	$778.00	$4,870.00	$5,858.00	$20,267.00	$6,960.00
MI-G-3-SS	15	$20,677.00	$5,061.00	$16,015.00	$16,015.00	$877.00	$4,870.00	$5,858.00	$21,806.00	$8,441.00
MI-G-4-SS	20	$25,302.00	$5,178.00	$16,015.00	$16,015.00	$988.00	$5,245.00	$5,858.00	$23,084.00	$9,440.00
MI-G-5-SS	25	$28,421.00	$5,484.00	$17,072.00	$17,072.00	$1,120.00	$5,475.00	$6,519.00	$24,372.00	$10,908.00
MI-G-6-SS	35	$35,132.00	$5,865.00	$19,138.00	$19,138.00	$1,241.00	$5,733.00	$7,037.00	$26,934.00	$13,390.00
MI-G-7-SS	50	$46,522.00	$8,768.00	$20,701.00	$20,701.00	$1,447.00	$5,858.00	$7,710.00	$28,220.00	$18,604.00

Suffix -DP for dosing pump - Add (**$5,517.00** all Models). **Suffix -HLA,** high level alarm - Add (**$17,269.00** all Models). **Suffix -AL,** aluminum lid - (MI-G-0-SS to MI-G-3-SS, **$1,781.00**), (MI-G-4-SS to MI-G-7-SS, **$2,495.00**). **Suffix -T** for threaded inlet and outlet connections - Add **$175.00** for 2", **$349.00** for 3"

MI-G-SD 7 TO 75 G.P.M. GREASE INTERCEPTOR WITH DRAW OFF VALVE MI-G-SD

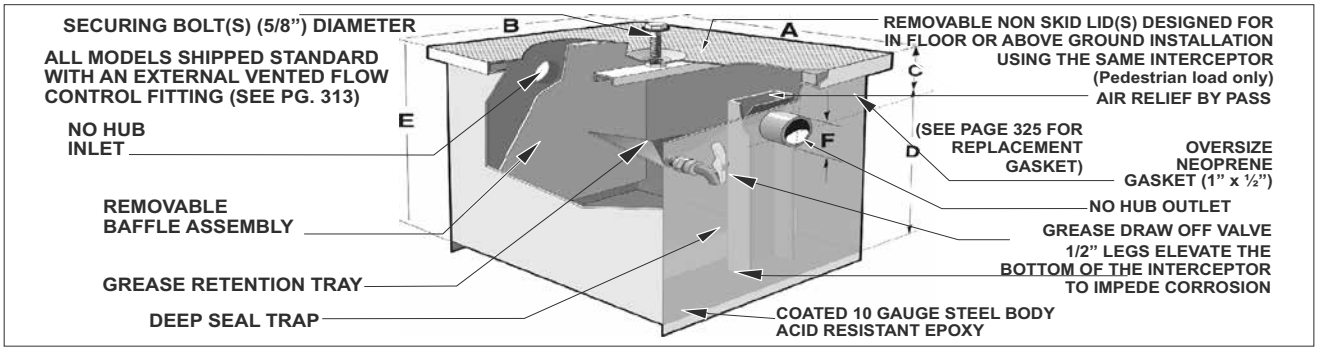

MIFAB is a recognized industry leader in the field of interceptor design and production.
As such, we offer a variety of specialized options and site-specific applications too numerous to list in this price guide. For features such as sacrificial anode packs, all stainless steel construction and a variety of other special features, please see our Engineering Catalog or consult your local MIFAB representative.

MODEL NO.	US GPM	CAP. LBS.	LIQUID HOLDING CAP. (U.S.G.)	A IN	B IN	C IN	D IN	E IN	F IN	NO. OF LIDS	NO. OF BOLTS
MI-G-SD-1	7	14	6.00	17.75	13.75	3.5	8.5	12.0	2	1	1
MI-G-SD-2	10	20	9.74	21.25	15.75	3.5	9.5	13.0	2	1	1
MI-G-SD-3	15	30	13.59	23.75	15.75	3.5	11.5	15.0	2	1	1
MI-G-SD-4	20	40	16.18	23.75	15.75	3.5	14.0	17.5	3	1	1
MI-G-SD-5	25	50	23.34	27.75	18.75	3.5	14.0	17.5	3	1	1
MI-G-SD-6	35	70	41.31	31.25	23.75	5.5	16.5	22.0	3	1	4
MI-G-SD-7	50	100	46.82	31.25	23.75	5.5	18.5	24.0	3	1	4
MI-G-SD-8	75	150	108.05	42	28	6	26	32	4	2	8

NOTE: The "A" and "B" dimensions represent the largest dimension of the interceptor. Since the lid overhangs the body by 1/2" on all sides, deduct 1" from the stated dimensions in the charts above to determine the actual body length & width.

NOTE: The"C" dimension is from the center of the inlet/outlet (invert) to the top of the interceptor. Inlet & outlet "C"dimensions are always the same.

MODEL NUMBER	US GPM	LIST PRICE	SEDIMENT BUCKET "-SB"	TILE RECESS 1/8" "-TL" (ADD)	ADD FOR COVER SHROUD (MI-CSD) (ADD)	ANCHOR FLANGE "-FL"	FLANGE & MEMBRANE CLAMP "-FLM"	HEAVY DUTY REINFORCED LID "-HD" 10,000 LB.S LIVE LOAD (ADD)
MI-G-SD-1	7	$6,811.00	$2,343.00	$7,980.00	$9,979.00	$1,948.00	$2,343.00	$9,173.00
MI-G-SD-2	10	$9,023.00	$2,343.00	$9,752.00	$11,338.00	$1,948.00	$2,343.00	$9,751.00
MI-G-SD-3	15	$10,208.00	$2,343.00	$11,156.00	$12,609.00	$1,948.00	$2,343.00	$10,778.00
MI-G-SD-4	20	$12,541.00	$2,400.00	$11,288.00	$13,037.00	$2,101.00	$2,343.00	$11,288.00
MI-G-SD-5	25	$15,504.00	$2,536.00	$11,919.00	$13,553.00	$2,187.00	$2,613.00	$11,482.00
MI-G-SD-6	35	$17,372.00	$2,714.00	$16,399.00	$14,573.00	$2,300.00	$2,712.00	$15,801.00
MI-G-SD-7	50	$20,665.00	$4,060.00	$17,995.00	$15,043.00	$2,364.00	$3,086.00	$17,338.00
MI-G-SD-8	75	$25,428.00	$4,573.00	$20,226.00	$18,503.00	$2,839.00	$5,184.00	$17,869.00

Suffix -DP for dosing pump - Add (**$5,517.00** all Models). **Suffix -HLA,** high level alarm - Add (**$17,269.00** all Models). **Suffix -AL,** aluminum lid - (MI-G-SD-1 to MI-G-SD-4, **$1,781.00**), (MI-G-SD-5 to MI-G-SD-8, **$2,495.00**). **Suffix -T** for threaded inlet and outlet connections - Add **$175.00** for 2", **$349.00** for 3", **$698.00** for 4". **Suffix -AP** for anode pack - **$3,663.00**

MI-G-SDH (With Draw-off Hose) SEMI AUTOMATIC 7 TO 50 G.P.M. GREASE INTERCEPTOR MI-G-SDH

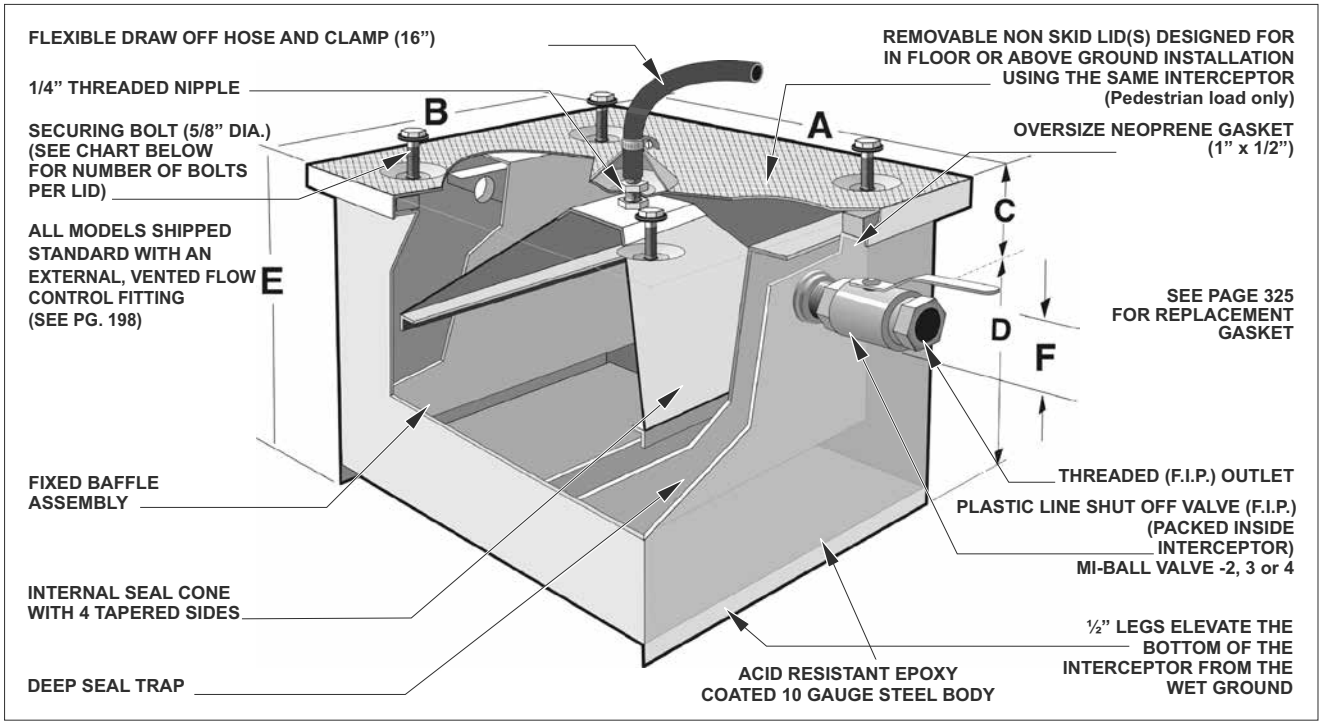

MODEL NO.	US GPM	CAP. LBS.	LIQUID HOLDING CAPACITY (U.S.G.)	A IN	B IN	C IN	D IN	E IN	F IN	NO. OF LIDS	NO. OF BOLTS
MI-G-SDH-1	7	14	8.44	20.25	16.25	3.5	8.5	12	2	1	10
MI-G-SDH-2	10	20	13.00	23.75	18.25	3.5	9.5	13	2	1	12
MI-G-SDH-3	15	30	18.28	26.75	18.25	3.5	11.5	15	2	1	14
MI-G-SDH-4	20	40	21.33	26.25	18.25	3.5	14	17.5	3	1	14
MI-G-SDH-5	25	50	29.43	30.25	21.25	3.5	14	17.5	3	1	16
MI-G-SDH-6	35	70	50.00	33.75	26.25	5.5	16.5	22	3	1	18
MI-G-SDH-7	50	100	56.67	33.75	26.25	5.5	18.5	24	3	1	18

NOTE: The "A" and "B" dimensions represent the largest dimension of the interceptor. Since the lid overhangs the body by 1/2" on all sides, deduct 1" from the stated dimensions in the charts below to determine the actual body length & width.

MODEL NUMBER	US GPM	LIST PRICE	ADD FOR COVER SHROUD (MI-CSD) (ADD)	BOLT ON EXTENSION (PER 6") (ADD)	ADDITIONAL "-C" UP TO 6" (ADD)	ANCHOR FLANGE "-FL"	FLANGE AND MEMBRANE CLAMP "-FLM"
MI-G-SDH-1	7	$12,153.00	$9,979.00	$5,565.00	$5,565.00	$1,949.00	$2,344.00
MI-G-SDH-2	10	$14,368.00	$11,338.00	$6,239.00	$6,239.00	$1,949.00	$2,344.00
MI-G-SDH-3	15	$15,310.00	$12,609.00	$6,409.00	$6,409.00	$1,949.00	$2,344.00
MI-G-SDH-4	20	$19,680.00	$13,037.00	$6,409.00	$6,409.00	$2,103.00	$2,344.00
MI-G-SDH-5	25	$22,826.00	$13,553.00	$7,286.00	$7,286.00	$2,188.00	$2,613.00
MI-G-SDH-6	35	$23,422.00	$14,573.00	$7,659.00	$7,659.00	$2,301.00	$2,712.00
MI-G-SDH-7	50	$26,741.00	$15,043.00	$8,281.00	$8,281.00	$2,344.00	$3,086.00

Suffix -DP for dosing pump - Add (**$5,517.00** all Models). **Suffix -HLA,** high level alarm - Add (**$17,269.00** all Models).
Suffix -AL, aluminum lid - (MI-G-SDH-1 to MI-G-SDH-3, **$1,781.00**), (MI-G-SDH-4 to MI-G-SDH-7, **$2,506.00**) **Suffix -AP** for anode pack - **$3,663.00**

MODEL NO.	US GPM	CAP. LBS.	LIQUID HOLDING CAPACITY (U.S.G.)	A IN	B IN	C IN	D IN	E IN	F IN	NO. OF LIDS	NO. OF BOLTS
MI-G-L-SDH-20	20	40	20.13	36.5	26.5	4	7	11	3	1	18
MI-G-L-SDH-35	35	70	28.84	44.5	30.5	4	7	11	3	1	18
MI-G-L-SDH-50	50	100	33.77	48.5	32.5	4	7	11	3	1	18

NOTE: The"C" dimension is from the center of the inlet/outlet (invert) to the top of the interceptor. Inlet & outlet "C"dimensions are always the same.

MODEL NUMBER	US GPM	LIST PRICE	ANCHOR FLANGE "-FL"	FLANGE & MEMBRANE CLAMP "-FLM"
MI-G-L-SDH-20	20	$22,702.00	$2,090.00	$2,328.00
MI-G-L-SDH-35	35	$32,005.00	$2,276.00	$2,674.00
MI-G-L-SDH-50	50	$39,258.00	$2,324.00	$3,079.00

Design and dimensions are subject to modification. Prices do not include applicable taxes. Visit **www.mifab.com** for the most recent product information.
MIFAB®, Inc., 1321 West 119th Street, Chicago, Illinois 60643-5109, USA Toll Free: 1-800-465-2736 • Fax: 1-773-341-3049
All sales subject to MIFAB's® Terms & Warranties. Please refer to inside front cover. sales@mifab.com • Canada Toll Free: 1-800-387-3880

MI-CS COVER SHROUDS for 4 to 100 US G.P.M PDI GREASE INTERCEPTORS MI-CS

The shroud provides support for the interceptor and adjustability of the inlet and outlet dimensions to match drainage piping where necessary. The shroud can be set in the slab at the time of pouring. The shroud is secured and suspended in the slab by its anchoring flanges. The interceptor is easily accessible for cleaning and inspection simply by removing the cover that sits flush with the floor.

MI-CS FOR MI-G SERIES GREASE INTERCEPTORS

MODEL NO.	USE WITH INTERCEPTOR	A IN	B IN	C IN	D IN	E IN	F IN
MI-CS-4	MI-G-0	21.75	16.25	5	1.00	11.75	4.25
MI-CS-7	MI-G-1	22.75	18.75	6	1.00	11.75	5.50
MI-CS-10	MI-G-2	26.25	20.75	6	1.00	11.75	6.25
MI-CS-15	MI-G-3	28.75	20.75	6	1.00	11.75	6.25
MI-CS-20	MI-G-4	28.75	20.75	6	1.25	14.75	6.25
MI-CS-25	MI-G-5	32.75	23.75	6	1.25	14.75	7.00
MI-CS-35	MI-G-6	36.25	28.75	8	1.25	14.75	8.75
MI-CS-50	MI-G-7	36.25	28.75	8	1.25	14.75	8.75
MI-CS-75*	XL-MI-G-0	47	33	8	1.25	14.75	9.50
MI-CS-100*	XL-MI-G-1	47	42	8	1.25	14.75	9.50

NOTE: *75 & 100 GPM require 2 lids.

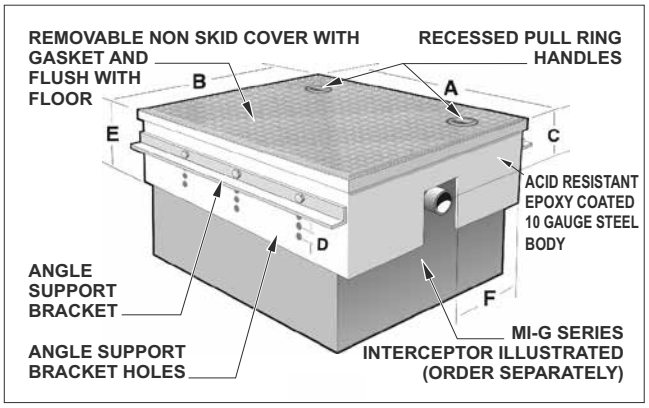

MODEL NUMBER	LIST PRICE	TILE RECESS 1/8" "-TL" (ADD)	ANCHOR FLANGE "-FL"	FLANGE & MEMBRANE CLAMP "-FLM"	HEAVY DUTY REINFORCED LID "-HD" 10,000 LB.S LIVE LOAD (ADD)
MI-CS-4	$8,152.00	$6,960.00	$1,949.00	$2,344.00	$7,245.00
MI-CS-7	$8,152.00	$6,960.00	$1,949.00	$2,344.00	$7,980.00
MI-CS-10	$9,463.00	$6,960.00	$1,949.00	$2,344.00	$9,752.00
MI-CS-15	$10,518.00	$8,441.00	$1,949.00	$2,344.00	$11,156.00
MI-CS-20	$10,684.00	$9,440.00	$2,103.00	$2,344.00	$11,288.00
MI-CS-25	$10,879.00	$10,908.00	$2,188.00	$2,613.00	$11,919.00
MI-CS-35	$11,628.00	$13,390.00	$2,301.00	$2,712.00	$16,399.00
MI-CS-50	$11,734.00	$18,604.00	$2,344.00	$3,086.00	$17,995.00
MI-CS-75	$14,264.00	$19,730.00	$2,737.00	$4,975.00	$19,462.00
MI-CS-100	$19,364.00	$20,942.00	$3,063.00	$5,564.00	$19,864.00

MI-CS Series supplied with one interior & one exterior angle support bracket per side. Interior angle bracket to support interceptor (purchased separately), exterior angle bracket to form anchor flange.

NOTE: The "C" dimension is with the support brackets in the top set of holes. Increase this dimension by "D" for each set of holes the support brackets are moved down, to a maximum of five sets.

Suffix -AL, aluminum lid - (MI-CS-4 to MI-CS-15, **$2,351.00**), (MI-CS-20 to MI-CS-100, **$3,676.00**). **Suffix -AP** for anode pack - **$3,663.00**

MI-CSD FOR MI-G-SD(H) SERIES DRAW-OFF GREASE INTERCEPTORS MI-CSD

MODEL NO.	USE WITH INTERCEPTOR	A IN	B IN	C IN	D IN	E IN	F IN
MI-CSD-7	MI-G-SD(H)-1	32.75	18.75	6	1.00	11.75	5.50
MI-CSD-10	MI-G-SD(H)-2	36.25	20.75	6	1.00	11.75	6.25
MI-CSD-15	MI-G-SD(H)-3	38.75	20.75	6	1.00	11.75	6.25
MI-CSD-20	MI-G-SD(H)-4	38.75	20.75	6	1.25	14.75	6.25
MI-CSD-25	MI-G-SD(H)-5	42.75	23.75	6	1.25	14.75	7.00
MI-CSD-35	MI-G-SD(H)-6	46.25	28.75	8	1.25	14.75	8.75
MI-CSD-50	MI-G-SD(H)-7	46.25	28.75	8	1.25	14.75	8.75
MI-CSD-75*	MI-G-SD(H)-8	47.00	33	8	1.25	14.75	9.50

NOTE: *75 & 100 GPM requires 2 lids.

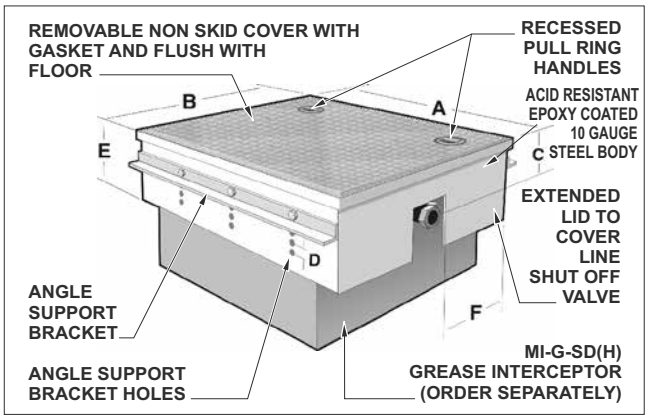

MODEL NUMBER	LIST PRICE	TILE RECESS 1/8" "-TL" (ADD)	ANCHOR FLANGE "-FL"	FLANGE & MEMBRANE CLAMP "-FLM"	HEAVY DUTY REINFORCED LID "-HD"
MI-CSD-7	$9,979.00	$6,960.00	$1,949.00	$2,344.00	$7,980.00
MI-CSD-10	$11,338.00	$6,960.00	$1,949.00	$2,344.00	$9,752.00
MI-CSD-15	$12,609.00	$8,441.00	$1,949.00	$2,344.00	$11,156.00
MI-CSD-20	$13,037.00	$9,440.00	$2,103.00	$2,344.00	$11,288.00
MI-CSD-25	$13,553.00	$10,908.00	$2,188.00	$2,613.00	$11,919.00
MI-CSD-35	$14,573.00	$13,390.00	$2,301.00	$2,712.00	$16,399.00
MI-CSD-50	$15,043.00	$18,604.00	$2,344.00	$3,086.00	$17,995.00
MI-CSD-75	$18,503.00	$19,730.00	$2,737.00	$4,975.00	$19,462.00

MI-CS Series supplied with one interior & one exterior angle support bracket per side. Interior angle bracket to support Interceptor (purchased separately), exterior angle bracket to form anchor flange.

NOTE: The "C" dimension is with the support brackets in the top set of holes. Increase this dimension by "D" for each set of holes the support brackets are moved down, to a maximum of five sets.

Suffix -AL, aluminum lid - (MI-CSD-7 to MI-CSD-20, **$2,821.00**), (MI-CSD-25 to MI-CSD-75, **$4,230.00**). **Suffix -AP** for anode pack - **$3,663.00**

MI-O 10 to 500 US G.P.M. OIL INTERCEPTOR MI-O

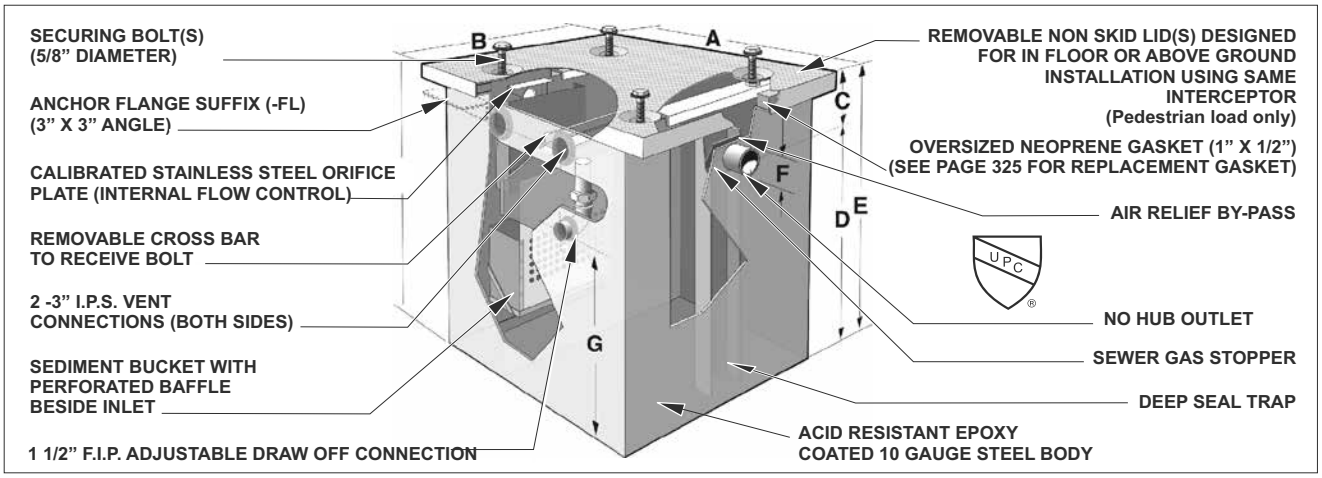

NOTE: Optional holding tank (SUFFIX-HT) may be required. Holding tank is same size as interceptor. Check with local code authorities.

MIFAB is a recognized industry leader in the field of interceptor design and production. As such, we offer a variety of specialized options and site-specific applications too numerous to list in this price guide. For features such as sacrificial anode packs, all stainless steel construction and a variety of other special features, please see our Engineering Catalog or consult your local MIFAB representative.

MODEL NO.	US GPM	LIQUID HOLDING CAPACITY U.S.G.	CU.FT.	A IN	B IN	C IN	D IN	E IN	F IN	G IN	NO. OF LIDS	NO. OF BOLTS
MI-O-A	10	9.73	1.30	21.25	15.75	3.5	9.5	13	2	4	1	1
MI-O-B	15	13.59	1.82	23.75	15.75	3.5	11.5	15	2	6	1	1
MI-O-C	20	20.07	2.68	23.75	15.75	3.5	14	17.5	3	8	1	1
MI-O-1	25	55.15	7.37	28	22	6	26	32	3	19	1	4
MI-O-2	35	74.67	9.98	34	24	6	26	32	3	19	1	4
MI-O-3	50	80.76	10.80	34	24	6	28	34	3	21	1	4
MI-O-4	75	165.68	22.15	48	34	8	28	36	4	21	2	8
MI-O-5	100	185.21	24.76	51	36	8	28	36	4	21	2	8
MI-O-6	125	195.17	26.09	53	36	8	28	36	4	21	2	8
MI-O-7	150	214.30	28.65	58	36	10	28	38	4	21	3	12
MI-O-8	200	308.57	41.25	68	38	10	32	42	4	25	6	24
MI-O-9	250	426.39	57.00	74	40	12	38	50	4	31	6	24
MI-O-10	300	549.71	73.49	78	44	12	40	52	4	33	6	24
MI-O-11	350	621.30	83.06	80	46	12	40	52	6	33	6	24
MI-O-12	400	664.52	88.83	82	48	12	42	54	6	35	6	24
MI-O-13	450	690.91	92.36	84	50	12	42	54	6	35	6	24
MI-O-14	500	781.82	104.51	86	52	12	46	58	6	39	6	24

NOTE: The "A" and "B" dimensions represent the largest dimension of the interceptor. Since the lid overhangs the body by 1/2" on all sides, deduct 1" from the stated dimensions in the charts below to determine the actual body length & width.

NOTE: The "C" dimension is from the center of the inlet/outlet (invert) to the top of the interceptor. Inlet & outlet "C"dimensions are always the same.

NOTE: Extensions for holding tanks are an additional cost

MODEL NUMBER	US GPM	LIST PRICE	BOLT ON EXTENSION (PER 6") (ADD)	MI-O-A to MI-O-3 ADDITIONAL "-C" UP TO 6" (ADD) / UP TO 10" "-C" FOR MI-O-4 & LARGER	PER 1" OF "C" DIM. OVER "6" (ADD) OVER 10" FOR MI-O-4 AND LARGER	ANCHOR FLANGE "-FL"	FLANGE & MEMBRANE CLAMP "-FLM"	HEAVY DUTY REINFORCED LID "-HD" 10,000 LBS. LIVE LOAD (ADD)	HOLDING TANK "-HT" (ADD)
MI-O-A	10	**$8,113.00**	**$7,142.00**	**$7,142.00**	**$316.00**	**$1,949.00**	**$2,344.00**	**$8,113.00**	**$3,986.00**
MI-O-B	15	**$8,721.00**	**$7,237.00**	**$7,237.00**	**$355.00**	**$1,949.00**	**$2,344.00**	**$8,721.00**	**$5,196.00**
MI-O-C	20	**$9,235.00**	**$7,440.00**	**$7,440.00**	**$400.00**	**$2,103.00**	**$2,344.00**	**$9,235.00**	**$6,292.00**
MI-O-1	25	**$9,752.00**	**$7,659.00**	**$7,659.00**	**$456.00**	**$2,188.00**	**$2,613.00**	**$9,752.00**	**$6,819.00**
MI-O-2	35	**$10,778.00**	**$7,946.00**	**$7,946.00**	**$499.00**	**$2,301.00**	**$2,712.00**	**$10,778.00**	**$8,276.00**
MI-O-3	50	**$11,288.00**	**$9,484.00**	**$9,484.00**	**$576.00**	**$2,344.00**	**$3,086.00**	**$11,288.00**	**$11,150.00**
MI-O-4	75	**$38,920.00**	**$5,341.00**	**$5,341.00**	**$355.00**	**$2,553.00**	**$4,623.00**	**$11,919.00**	**$19,333.00**
MI-O-5	100	**$42,202.00**	**$5,571.00**	**$5,571.00**	**$380.00**	**$2,856.00**	**$5,174.00**	**$16,399.00**	**$20,988.00**
MI-O-6	125	**$49,232.00**	**$5,794.00**	**$5,794.00**	**$410.00**	**$3,423.00**	**$5,794.00**	**$17,995.00**	**$24,403.00**
MI-O-7	150	**$52,262.00**	**$6,019.00**	**$6,019.00**	**$434.00**	**$3,986.00**	**$6,409.00**	**$21,057.00**	**$25,944.00**
MI-O-8	200	**$73,828.00**	**$8,610.00**	**$8,610.00**	**$456.00**	**$4,270.00**	**$7,491.00**	**$24,017.00**	**$36,558.00**
MI-O-9	250	**$85,493.00**	**$11,191.00**	**$11,191.00**	**$499.00**	**$5,706.00**	**$9,716.00**	**$33,146.00**	**$42,475.00**
MI-O-10	300	**$96,805.00**	**$13,602.00**	**$13,602.00**	**$561.00**	**$6,451.00**	**$10,899.00**	**$42,551.00**	**$48,093.00**
MI-O-11	350	**$108,047.00**	**$16,114.00**	**$16,114.00**	**$628.00**	**$7,186.00**	**$12,075.00**	**$50,176.00**	**$53,701.00**
MI-O-12	400	**$130,753.00**	**$18,795.00**	**$18,795.00**	**$690.00**	**$7,635.00**	**$12,832.00**	**$57,784.00**	**$61,821.00**
MI-O-13	450	**$141,780.00**	**$21,936.00**	**$21,936.00**	**$725.00**	**$8,086.00**	**$13,600.00**	**$66,029.00**	**$70,640.00**
MI-O-14	500	**$150,340.00**	**$25,184.00**	**$25,184.00**	**$747.00**	**$8,538.00**	**$14,368.00**	**$70,600.00**	**$77,972.00**

Suffix -HLA, high level alarm - Add (**$17,269.00** all Models). **Suffix -AL,** aluminum lid - (MI-O-A to MI-O-3, **$2,351.00**), (MI-O-4 to MI-O-8, **$4,230.00**), MI-O-9 to MI-O-14, **$7,053.00**).
Suffix -T for threaded inlet and outlet connections - Add **$175.00** for 2", **$349.00** for 3", **$698.00** for 4", **$873.00** for 6". **Suffix -AP** for anode pack - **$3,663.00**

Design and dimensions are subject to modification. Prices do not include applicable taxes. Visit **www.mifab.com** for the most recent product information.

MIFAB®, Inc., 1321 West 119th Street, Chicago, Illinois 60643-5109, USA
Toll Free: 1-800-465-2736 • Fax: 1-773-341-3049
sales@mifab.com • Canada Toll Free: 1-800-387-3880

All sales subject to MIFAB's® Terms & Warranties. Please refer to inside front cover.

MI-O-HU 10 to 500 US G.P.M. OIL INTERCEPTOR WITH INTEGRAL OIL STORAGE TANK MI-O-HU

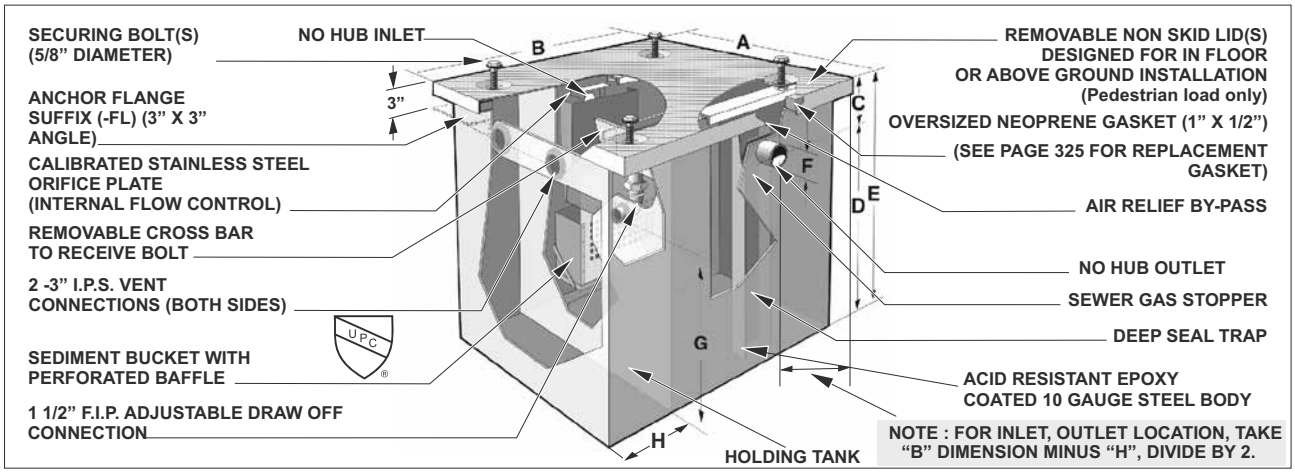

MIFAB is a recognized industry leader in the field of interceptor design and production.
As such, we offer a variety of specialized options and site-specific applications too numerous to list in this price guide. For features such as sacrificial anode packs, all stainless steel construction and a variety of other special features, please see our Engineering Catalog or consult your local MIFAB representative.

Optional high level alarm: **Suffix -HLA,** high level alarm - Add (**$17,269.00** all Models). **Suffix -AL,** aluminum lid - (MI-O-HU-A to MI-O-HU-3, **$4,230.00**), (MI-O-HU-4 to MI-O-HU-8, **$5,877.00**), MI-O-HU-9 to MI-O-HU-14, **$9,401.00**).

Suffix -T for threaded inlet and outlet connections - Add **$175.00** for 2", **$349.00** for 3", **$698.00** for 4", **$873.00** for 6". **Suffix -AP** for anode pack - **$3,663.00**

MODEL NO.	US GPM	INTERCEPTOR LIQUID HOLDING CAPACITY (U.S.G.)	A IN	B IN	C IN	D IN	E IN	F IN	G IN	H IN	HOLDING TANK CAP. CU. FT. of liquid	Lbs. of liquid	U.S.G of liquid	TOTAL OPERATING Lbs.	NO. OF LIDS	NO. OF BOLTS
MI-O-HU-A	10	10.66	24	26	4	9	13	2	4	10	1.2	74.93	8.98	326.12	1	4
MI-O-HU-B	15	15.06	26	26.50	4	11	15	2	6	10	1.64	102.40	12.27	400.08	1	4
MI-O-HU-C	20	18.08	26	26.50	4	13.50	17.5	3	8	10	1.92	119.88	14.36	457.50	1	4
MI-O-HU-1	25	63.12	29	46	4.5	25.5	30	3	20	21.5	8.69	542.60	65.00	1466.71	2	8
MI-O-HU-2	35	100.23	37	44.5	5	26	31	3	20.5	15.5	8.16	509.51	61.04	1880.36	4	16
MI-O-HU-3	50	163.07	43	65.5	6	26	32	3	20.5	26.0	15.65	977.19	117.06	3087.07	4	16
MI-O-HU-4	75	201.89	49	65	9.5	26.5	36	4	20.5	22.5	16.27	1015.90	133.70	3513.86	4	16
MI-O-HU-5	100	302.91	58	90	9.5	26.5	36	4	20.5	37	31.78	1984.34	237.71	5866.90	9	36
MI-O-HU-6	125	344.42	62	90	12	28	40	4	22	37	35.97	2245.97	269.06	6580.28	9	36
MI-O-HU-7	150	356.85	66	76	14	30	44	4	24	28	31.11	1942.51	232.70	6536.30	9	36
MI-O-HU-8	200	452.72	73.25	90	17.5	30.5	48	4	24.5	36.5	46.39	2896.59	347.00	8803.22	9	36
MI-O-HU-9	250	588.97	73.25	90	15.5	35.5	51	4	29.5	31	46.65	2912.83	348.94	9997.11	9	36
MI-O-HU-10	300	814.82	94.875	86	15.5	36.5	52	6	29.5	23.5	46.16	2882.23	345.28	12312.77	9	36
MI-O-HU-11	350	1066.06	100.875	94	16.5	43.5	60	6	36.5	30.5	76.01	4746.06	568.55	16624.95	9	36
MI-O-HU-12	400	1109.11	107.875	91	17	43	60	6	36	28.5	75.17	4693.61	562.27	17052.63	9	36
MI-O-HU-13	450	1113.05	118.875	83	17	43	60	6	36	26.0	75.70	4726.71	566.24	17236.29	9	36
MI-O-HU-14	500	1240.03	118.875	83	20	46	66	6	39	24.0	74.75	4667.39	559.13	18531.51	9	36

NOTE: The "A" and "B" dimensions represent the largest dimension of the interceptor. Since the lid overhangs the body by 1/2" (13) on all sides, deduct 1" (25) from the stated dimensions in the charts below to determine the actual body length & width.

NOTE: The "C" dimension is from the center of the inlet/outlet (invert) to the top of the interceptor. Inlet & outlet "C"dimensions are always the same.

MODEL NUMBER	US GPM	LIST PRICE	BOLT ON EXTENSION (PER 6") (ADD)	MI-O-HU-A to MI-O-HU-3 ADDITIONAL "-C" UP TO 6"	(ADD) UP TO 10" "-C" FOR MI-O-HU-4 & LARGER	PER 1" OF "C" DIM. OVER "6" (ADD) OVER 10" FOR MI-O-HU-4 AND LARGER	ANCHOR FLANGE "-FL"	FLANGE & MEMBRANE CLAMP "-FLM"	HEAVY DUTY REINFORCED LID "-HD" 10,000 LBS. LIVE LOAD (ADD)	DOUBLE WALL (ADD) DESIGN
MI-O-HU-A	10	$11,442.00	$10,721.00	$10,721.00		$450.00	$2,914.00	$3,502.00	$12,932.00	$17,855.00
MI-O-HU-B	15	$15,698.00	$10,854.00	$10,854.00		$545.00	$2,914.00	$3,502.00	$13,736.00	$24,615.00
MI-O-HU-C	20	$18,980.00	$11,177.00	$11,177.00		$621.00	$3,155.00	$3,502.00	$14,546.00	$26,984.00
MI-O-HU-1	25	$20,608.00	$11,478.00	$11,478.00		$674.00	$3,294.00	$3,903.00	$15,345.00	$31,590.00
MI-O-HU-2	35	$25,039.00	$11,906.00	$11,906.00		$734.00	$3,424.00	$4,043.00	$16,161.00	$36,036.00
MI-O-HU-3	50	$33,700.00	$14,221.00	$14,221.00		$864.00	$3,502.00	$4,621.00	$16,987.00	$49,693.00
MI-O-HU-4	75	$58,380.00	$8,010.00	$8,010.00		$545.00	$3,854.00	$6,960.00	$17,855.00	$63,824.00
MI-O-HU-5	100	$63,333.00	$8,353.00	$8,353.00		$571.00	$4,314.00	$7,764.00	$24,616.00	$75,279.00
MI-O-HU-6	125	$73,792.00	$8,702.00	$8,702.00		$621.00	$5,125.00	$8,702.00	$26,984.00	$86,663.00
MI-O-HU-7	150	$78,371.00	$9,034.00	$9,034.00		$651.00	$5,981.00	$9,619.00	$31,591.00	$99,053.00
MI-O-HU-8	200	$110,706.00	$12,932.00	$12,932.00		$674.00	$6,384.00	$11,234.00	$36,038.00	$105,927.00
MI-O-HU-9	250	$128,243.00	$16,779.00	$16,779.00		$755.00	$8,567.00	$14,546.00	$49,693.00	$125,756.00
MI-O-HU-10	300	$145,211.00	$20,418.00	$20,418.00		$864.00	$9,673.00	$16,692.00	$63,825.00	$143,787.00
MI-O-HU-11	350	$168,708.00	$24,164.00	$24,164.00		$953.00	$10,778.00	$18,101.00	$75,279.00	$159,692.00
MI-O-HU-12	400	$193,269.00	$28,197.00	$28,197.00		$1,032.00	$11,442.00	$19,103.00	$86,664.00	$183,648.00
MI-O-HU-13	450	$221,964.00	$32,885.00	$32,885.00		$1,085.00	$12,113.00	$20,415.00	$99,055.00	$209,595.00
MI-O-HU-14	500	$245,686.00	$37,650.00	$37,650.00		$1,135.00	$12,830.00	$21,547.00	$105,927.00	$231,551.00

Suffix -HLA, high level alarm - Add (**$17,269.00** all Models). **Suffix -AL,** aluminum lid - (MI-O-HU-A to MI-O-HU-3, **$4,230.00**), (MI-O-HU-4 to MI-O-HU-8, **$5,877.00**), MI-O-HU-9 to MI-O-HU-14, **$9,401.00**). **Suffix -T** for threaded inlet and outlet connections - Add **$175.00** for 2", **$349.00** for 3", **$698.00** for 4", **$873.00** for 6". **Suffix -AP** for anode pack - **$3,663.00**

MI-OS MI-OS OIL/SEDIMENT INTERCEPTOR MI-OS

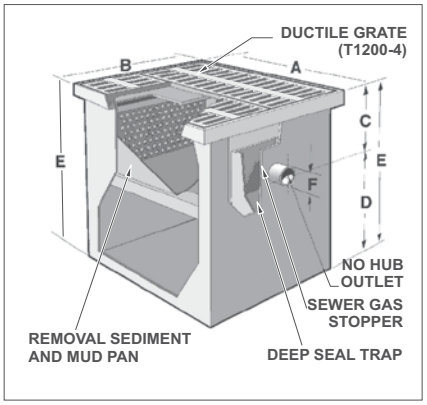

Note: GPM flow rate is based on pipe size

MODEL NO.	SLUDGE CAP. LBS.	GRATE FREE AREA	NO. OF GRATES	A IN	B IN	C IN	D IN	E IN	F IN	LIQUID HOLDING CAP. USG	LIQUID HOLDING CAP. CU. FT.
MI-OS-1	12	49	1	24.375	12.5	4.5	10.5	15.0	2	12	1.6
MI-OS-2	60	131	2	24.375	24.5	7.625	17.625	25.25	4	40	6.13
MI-OS-3	100	262	3	36.625	24.375	11	22	33	4	77	10.25
MI-OS-4	200	393	4	48.750	24.375	11	22	33	4	103	15.8
MI-OS-5	300	524	8	48.750	48.675	11	22	33	4	193.33	29.7

MODEL NUMBER	LIST PRICE	BOLT ON EXTENSION (PER 6") (ADD)	ADDITIONAL "-C" UP TO 6" (ADD)	PER 1" OF "C" DIM. OVER "6" (ADD)	ANCHOR FLANGE "-FL"	FLANGE & MEMBRANE CLAMP "-FLM"	Heavy Duty Solid Traffic Cover (10,000 lbs. max. live load) "-SC"
MI-OS-1	$5,020.00	$845.00	$845.00	$130.00	$1,049.00	$1,447.00	$943.00
MI-OS-2	$13,531.00	$1,264.00	$1,264.00	$192.00	$1,447.00	$2,171.00	$1,881.00
MI-OS-3	$19,228.00	$1,673.00	$1,673.00	$274.00	$1,821.00	$2,738.00	$3,063.00
MI-OS-4	$28,492.00	$2,513.00	$2,513.00	$400.00	$2,392.00	$3,518.00	$4,081.00
MI-OS-5	$37,609.00	$3,319.00	$3,319.00	$529.00	$3,155.00	$4,642.00	$5,388.00

Suffix: -DI - No hub inlet connection - **$175.00** for 2" and **$698.00** for 4" Located opposite side of outlet

MI-HAIR LAVATORY MOUNTED HAIR & SEDIMENT INTERCEPTOR MI-HAIR

MODEL NO.	LIST PRICE (Cast Iron)	SHIPPING WEIGHT LBS.	CHROME PLATED (-49) (Add)	REPLACEMENT SS BUCKET "-SSB" (ADD)
MI-HAIR	$1,365.00	6	$792.00	$391.00

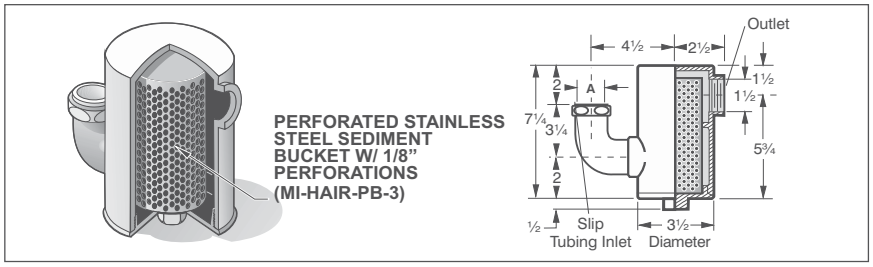

MI-SOLID-S SUSPENDED SEDIMENT and SOLIDS INTERCEPTOR MI-SOLID-S

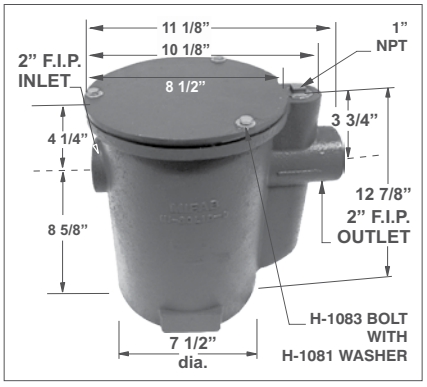

MODEL NUMBER	US GPM	LIST PRICE	STAINLESS STEEL BODY "-SS" (ADD)	REPLACMENT BUCKET "-SB" (ADD)	STAINLESS STEEL MESH ON BUCKET "-SSM" (ADD)
MI-SOLID-S-30	15	$1,938.00	H.D.P.E. body	$786.00	$609.00
MI-SOLID-S	15	$3,195.00	$2,539.00	$786.00	$609.00
MI-SOLID-LB	15	$3,381.00	$2,539.00	$786.00	$609.00
MI-SOLID-M	20	$4,272.00	$3,492.00	$1,924.00	$705.00
MI-SOLID-L	30	$7,161.00	$4,708.00	$3,303.00	$1,096.00

MI-SOLID-S-30

Avail. June, 2022

Note: The MI-SOLID-S has an internal sediment bucket with 1/8" perforations. The MI-SOLID-M and MI-SOLID-L have 3/16" perforations in their sediment buckets.

F.I.P. = Female iron pipe (Threaded Connection)

MI-SOLID-L

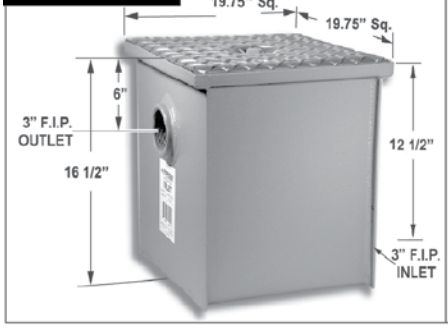

MI-SOLID-LB

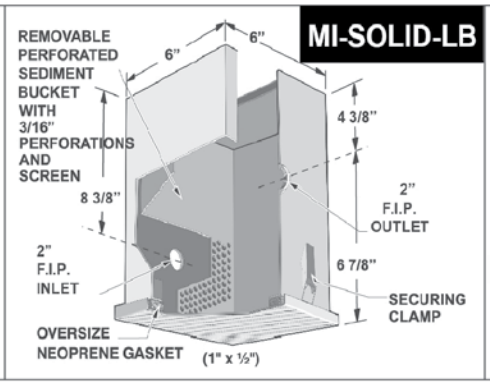

MI-SOLID-M

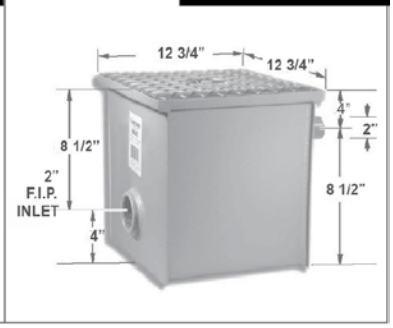

Design and dimensions are subject to modification. Prices do not include applicable taxes. Visit **www.mifab.com** for the most recent product information.
MIFAB®, Inc., 1321 West 119th Street, Chicago, Illinois 60643-5109, USA Toll Free: 1-800-465-2736 • Fax: 1-773-341-3049
All sales subject to MIFAB's® Terms & Warranties. Please refer to inside front cover. sales@mifab.com • Canada Toll Free: 1-800-387-3880

MI-SOLID-SA SIDE ACCESS SOLIDS INTERCEPTOR MI-SOLID-SA

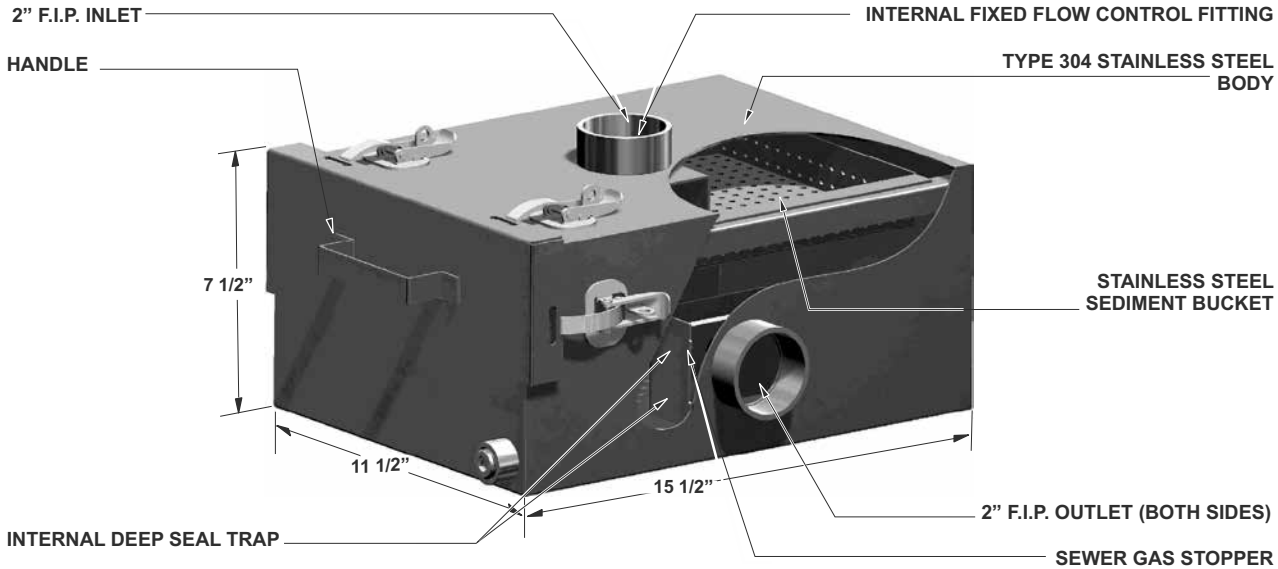

MODEL NUMBER	US GPM	SHIPPING WEIGHT LBS.	LIST PRICE	"-RB"	"-SSM"	"-6"	"-RL"
MI-SOLID-SA	35	22	$11,888.00	$3,878.00	$1,534.00	$614.00	$701.00

MI-SOLID-TA TOP ACCESS SOLIDS INTERCEPTOR MI-SOLID-TA

NOTE:
MINIMUM OF 12" VERTICAL CLEARANCE REQUIRED TO REMOVE SEDIMENT BUCKET

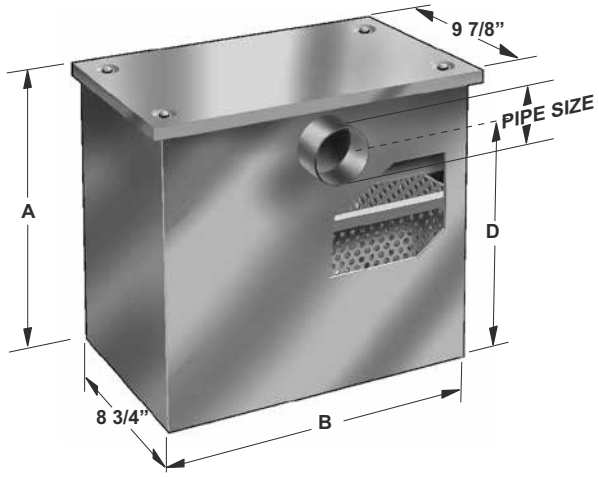

MODEL NUMBER	US GPM	LIST PRICE EPOXY COATED MILD STEEL	LIST PRICE STAINLESS STEEL "-304 SS"	REPLACMENT S.S. BUCKET "-RB" (ADD)
MI-SOLID-TA-0	4	$2,807.00	$4,359.00	$1,374.00
MI-SOLID-TA-1	7	$2,876.00	$4,631.00	$1,441.00
MI-SOLID-TA-2	10	$3,021.00	$4,986.00	$1,574.00
MI-SOLID-TA-3	15	$3,323.00	$5,620.00	$1,763.00
MI-SOLID-TA-4	20	$3,596.00	$6,111.00	$1,904.00
MI-SOLID-TA-5	25	$3,993.00	$7,110.00	$2,222.00
MI-SOLID-TA-6	35	$4,312.00	$7,970.00	$2,489.00
MI-SOLID-TA-7	50	$4,715.00	$8,979.00	$2,780.00
MI-SOLID-TA-8	75	$5,208.00	$10,058.00	$2,942.00
MI-SOLID-TA-9	100	$6,376.00	$11,252.00	$3,488.00
MI-SOLID-TA-10	125	$6,627.00	$11,878.00	$3,821.00
MI-SOLID-TA-11	150	$6,876.00	$12,502.00	$4,152.00

MODEL NO.	PIPE SIZE	A IN	B IN	C IN	D IN
MI-SOLID-TA-0	2"	11"	9 7/8"	2.5"	8 1/2"
MI-SOLID-TA-1	2"	12"	11 7/8"	3.5"	8 1/2"
MI-SOLID-TA-2	2"	13"	14"	3.5"	9 1/2"
MI-SOLID-TA-3	2"	15"	16 3/4"	3.5"	11 1/2"
MI-SOLID-TA-4	3"	17 1/2"	17 1/4"	3.5"	14"
MI-SOLID-TA-5	3"	17 1/2"	19 7/8"	3.5"	14"
MI-SOLID-TA-6	3"	22"	22 1/2"	5.5"	16 1/2"
MI-SOLID-TA-7	3"	24"	22 1/2"	5.5"	18 1/2"
MI-SOLID-TA-8	4"	32"	22 1/2"	6"	26"
MI-SOLID-TA-9	4"	35"	24 3/8"	7"	28"
MI-SOLID-TA-10	4"	39"	24 3/8"	8"	31"
MI-SOLID-TA-11	4"	43"	24 3/8"	9"	34"

MI-SAND SAND AND GRIT INTERCEPTORS

MI-SAND

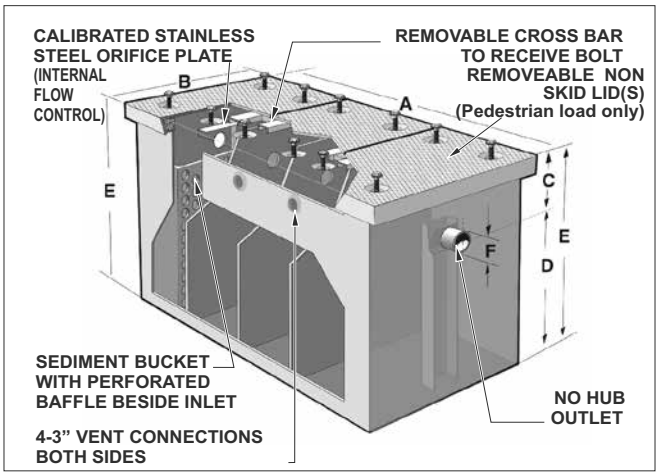

MODEL NO.	LIQUID HOLDING Cap. USG	A IN	B IN	C IN	D IN	E IN	F IN	NO.OF LIDS / BOLTS	
MI-SAND-1	323	60	36	22	38	60	4	3	12
MI-SAND-2	405	72	36	22	38	60	4	3	12
MI-SAND-3	540	96	36	22	38	60	6	4	16
MI-SAND-4	608	108	36	22	38	60	6	5	20
MI-SAND-5	700	120	36	22	38	60	6	5	20
MI-SAND-6	810	144	36	22	38	60	8	6	24
MI-SAND-7	1013	180	36	22	38	60	8	8	32

NOTE: The "C" dimension is from the center of the inlet/outlet (invert) to the top of the interceptor. Inlet & outlet "C" dimensions are always the same.

NOTE: The "A" and "B" dimensions represent the largest dimension of the interceptor. Since the lid overhangs the body by 1/2" on all sides, deduct 1" from the stated dimensions in the charts about to determine the actual body length & width

Note: GPM flow rate is based on pipe size

MODEL NUMBER	LIQUID HOLDING CAP. USG	LIST PRICE	Bolt on Extension (Per 6") (Add)	Additional "-C" Up to 6" (Add)	Per 1" of "C" Dim. over "6" (Add)	Anchor Flange "-FL"	Flange & Membrane Clamp "-FLM"	Heavy Duty Reinforced Lid "-HD" 10,000 Lb.s Live Load (Add)
MI-SAND-1	323	$57,336.00	$1,754.00	$1,754.00	$274.00	$2,513.00	$3,973.00	$2,253.00
MI-SAND-2	405	$84,569.00	$2,155.00	$2,155.00	$362.00	$2,875.00	$4,544.00	$2,826.00
MI-SAND-3	540	$114,591.00	$3,103.00	$3,103.00	$499.00	$5,741.00	$6,107.00	$4,133.00
MI-SAND-4	608	$117,279.00	$3,776.00	$3,776.00	$587.00	$6,456.00	$9,090.00	$4,711.00
MI-SAND-5	700	$127,917.00	$4,306.00	$4,306.00	$630.00	$7,174.00	$9,654.00	$5,121.00
MI-SAND-6	810	$131,935.00	$5,199.00	$5,199.00	$725.00	$8,610.00	$11,923.00	$5,647.00
MI-SAND-7	1013	$157,102.00	$5,741.00	$5,741.00	$859.00	$10,757.00	$14,757.00	$7,082.00

Suffix -AL, for aluminum lid, Add (**$7,053.00** each Model). **Suffix -AP** for anode pack - **$3,663.00**. **Suffix -T** for threaded inlet and outlet connections - Add **$175.00** for 2", **$349.00** for 3", **$698.00** for 4", **$873.00** for 6" and **$1048.00** for 8"

MI-SD SEDIMENT DRAIN INTERCEPTOR

MI-SD

Note: For heavy duty, traffic rated grates, go to MI-OS on page 212

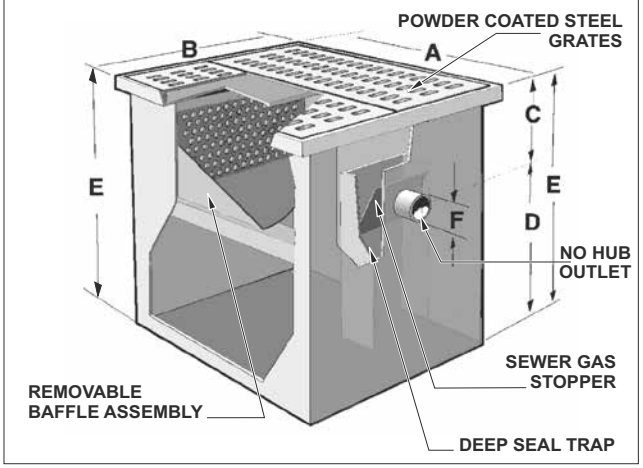

MODEL NO.	STATIC CAP. USG	CAP USG	A IN	B IN	C IN	D IN	E IN	F IN	NO. OF GRATES
MI-SD-1	3.5	12	12	14	4.5	10.5	15	2	1
MI-SD-2	6.5	23	16	20.75	7.5	12.5	20	3	1
MI-SD-3	22	77	20.5	27.0	7.625	17.625	25.25	3	1
MI-SD-4	30	105	20.5	27.0	10	23	33	3	1
MI-SD-5	55	193	24.375	24.5	10	22	32	3	2
MI-SD-6	100	350	48.625	24.5	10	22	32	3	4
MI-SD-7	140	438	48.625	30.5	11	27	38	4	6
MI-SD-8	214	665	60.50	36.5	11	27	38	4	9
MI-SD-9	330	910	72.625	36.5	11	27	38	4	9
MI-SD-10	374	1155	96.625	36.5	15	29	44	4	12

NOTE: The "A" and "B" dimensions represent the largest dimension of the interceptor. Since the lid overhangs the body by 1/2" on all sides, deduct 1" from the stated dimensions in the charts above to determine the actual body length & width.

NOTE: For solid cover, specify -SC. This product a no hub inlet connection (same size as outlet) (No Add).

Note: GPM flow rate is based on pipe size

MODEL NUMBER	US GPM	LIST PRICE	ADDITIONAL "-C" UP TO 6" (ADD)	PER 1" OF "C" DIM. OVER "6" (ADD)	ANCHOR FLANGE "-FL"	FLANGE & MEMBRANE CLAMP "-FLM"
MI-SD-1	3.5	$6,076.00	$708.00	$169.00	$842.00	$1,126.00
MI-SD-2	6.5	$6,565.00	$759.00	$229.00	$903.00	$1,264.00
MI-SD-3	22	$13,127.00	$989.00	$229.00	$1,126.00	$1,694.00
MI-SD-4	30	$14,441.00	$989.00	$229.00	$1,178.00	$1,744.00
MI-SD-5	55	$20,365.00	$1,264.00	$282.00	$1,500.00	$2,106.00
MI-SD-6	100	$26,255.00	$1,971.00	$422.00	$1,834.00	$2,678.00
MI-SD-7	140	$32,291.00	$2,532.00	$505.00	$1,968.00	$3,093.00
MI-SD-8	214	$39,382.00	$2,808.00	$543.00	$2,253.00	$3,652.00
MI-SD-9	330	$52,509.00	$3,652.00	$708.00	$2,678.00	$3,932.00
MI-SD-10	374	$65,638.00	$5,485.00	$989.00	$3,093.00	$4,497.00

Suffix -T for threaded inlet and outlet connections - Add **$175.00** for 2", **$349.00** for 3", **$698.00** for 4". **Suffix -AP** for anode pack - **$3,663.00**

Design and dimensions are subject to modification. Prices do not include applicable taxes. Visit **www.mifab.com** for the most recent product information.
MIFAB®, Inc., 1321 West 119th Street, Chicago, Illinois 60643-5109, USA Toll Free: 1-800-465-2736 • Fax: 1-773-341-3049
All sales subject to MIFAB's® Terms & Warranties. Please refer to inside front cover. sales@mifab.com • Canada Toll Free: 1-800-387-3880

MI-HEL HELIPORT FUEL SPILL INTERCEPTORS MI-HEL

The **MIFAB® MI-HEL** heliport fuel spill interceptor is designed for use where there is the potential of an aircraft fuel leak entering the storm sewer system, (such as a roof top helipad), where the regular roof drains are connected to a municipal storm sewer system. The **MI-HEL** is constructed from high strength 1/4" plate steel and features: outlet vent connection, internal vent connection, gasketed access covers with stainless steel bolts, 2" fuel drain connection, 1" fresh water inlet supply connection with gate valve, back flow preventer, automatic water level controlling float valve, external sight glass level indicator with drain cocks, 2" interceptor drain plugs, channel support rails and body corner lifting lugs. The unit is regularly furnished with a two part epoxy interior and exterior coating.

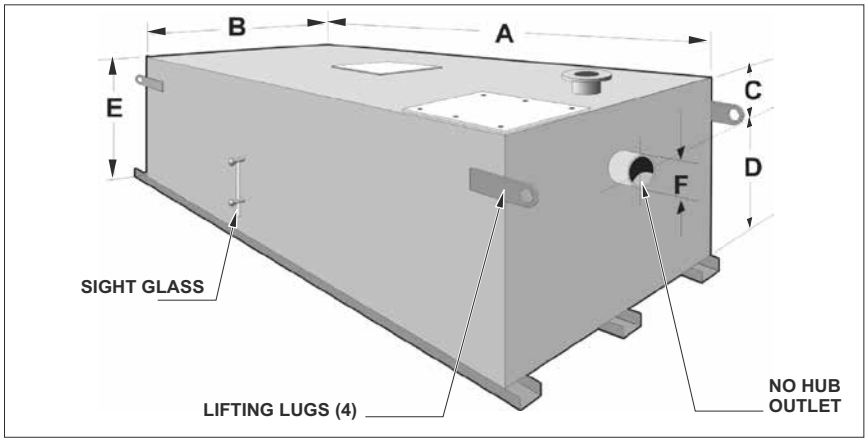

MODEL NO.	LIST PRICE
MI-HEL-1	P.O.A.
MI-HEL-2	P.O.A.
MI-HEL-3	P.O.A.
MI-HEL-4	P.O.A.
MI-HEL-5	P.O.A.
MI-HEL-6	P.O.A.

MODEL NO.	STATIC VOLUME CAP. USG	STATIC VOLUME CU. FT.	FUEL RETENTION CAP. USG	A IN	B IN	C IN	D IN	E IN	F IN
MI-HEL-1	135	18.0	35	90	36	12	36	48	6
MI-HEL-2	175	23.3	65	126	48	12	36	48	6
MI-HEL-3	200	26.6	90	132	63	12	36	48	6
MI-HEL-4	300	40.0	195	192	92	12	36	48	6
MI-HEL-5	350	46.6	220	213	96	12	36	48	6
MI-HEL-6	400	52.48	250	240	96	12	36	48	6

NOTE: Add **SUFFIX "-TO"** for top outlet, (No Add)

MI-SO SAND AND OIL INTERCEPTOR MI-SO

MODEL NO.	LIQUID HOLDING CAP. USG	A IN	B IN	C IN	D IN	E IN	F IN	G IN	NO. OF LIDS/BOLTS	
MI-SO-0	108.9	42	28	6	26	32	4	19	2	8
MI-SO-1	192.7	55	37	8	26	34	4	19	2	8
MI-SO-2	226.9	58	38	8	28	36	4	21	3	12
MI-SO-3	264.6	61	39	8	28	36	4	23	3	12
MI-SO-4	395.6	70	44	10	34	44	4	27	6	24
MI-SO-5	500.6	75	46	10	38	48	4	31	6	24
MI-SO-6	579.7	77	49	12	40	52	6	32	6	24
MI-SO-7	612.2	80	51	12	40	52	6	36	8	32
MI-SO-8	785.9	84	56	14	44	58	6	46	8	32
MI-SO-9	1172.3	92	61	14	54	68	6	46	8	32
MI-SO-10	1807.8	102	74	14	62	76	8	53	9	36
MI-SO-11	2105.3	108	76	14	66	80	8	57	9	36

NOTE: The "A" and "B" dimensions represent the largest dimension of the interceptor. Since the lid overhangs the body by 1/2" on all sides, deduct 1" from the stated dimensions in the charts above to determine the actual body length & width

NOTE: The "C" dimension is from the center of the inlet/outlet to the top of the interceptor. Inlet & outlet "C" dimensions are always the same.

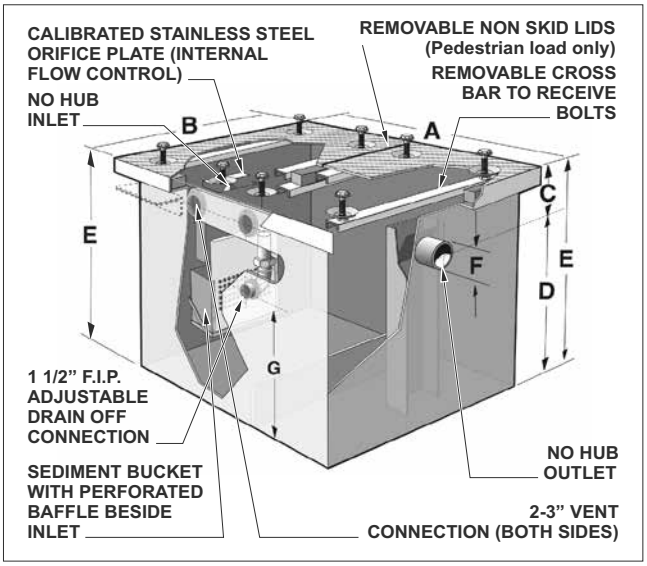

MODEL NUMBER	US GPM	LIST PRICE	BOLT ON EXTENSION (PER 6") (ADD)	ADDITIONAL "-C" UP TO 6" (ADD)	PER 1" OF "C" DIM. OVER "6" (ADD)	ANCHOR FLANGE "-FL"	FLANGE AND MEMBRANE CLAMP "-FLM"	HEAVY DUTY REINFORCED LID "-HD" 10,000 LB.S LIVE LOAD (ADD)
MI-SO-0	109	$59,673.00	$1,829.00	$1,829.00	$282.00	$2,615.00	$3,932.00	$2,338.00
MI-SO-1	193	$88,020.00	$2,244.00	$2,244.00	$373.00	$2,989.00	$4,497.00	$2,941.00
MI-SO-2	227	$114,591.00	$3,232.00	$3,232.00	$516.00	$5,987.00	$6,966.00	$4,302.00
MI-SO-3	265	$117,103.00	$3,929.00	$3,929.00	$607.00	$6,733.00	$8,995.00	$4,904.00
MI-SO-4	396	$127,917.00	$4,486.00	$4,486.00	$655.00	$7,474.00	$9,553.00	$5,328.00
MI-SO-5	580	$132,054.00	$5,425.00	$5,425.00	$746.00	$8,972.00	$11,799.00	$5,888.00
MI-SO-6	612	$156,831.00	$5,987.00	$5,987.00	$887.00	$11,219.00	$14,603.00	$7,386.00
MI-SO-7	700	$177,221.00	$6,565.00	$6,565.00	$1,182.00	$15,752.00	$18,379.00	$7,876.00
MI-SO-8	750	$196,912.00	$7,220.00	$7,220.00	$1,314.00	$18,379.00	$21,004.00	$8,533.00
MI-SO-9	750	$216,603.00	$7,876.00	$7,876.00	$1,443.00	$21,004.00	$23,630.00	$9,190.00
MI-SO-10	750	$236,294.00	$8,533.00	$8,533.00	$1,575.00	$23,630.00	$26,255.00	$9,845.00
MI-SO-11	750	$262,549.00	$9,190.00	$9,190.00	$1,838.00	$25,560.00	$28,880.00	$10,502.00

Suffix -HLA, high level alarm - Add (**$17,269.00** all Models). Optional aluminum lid, **Suffix -AL,** Add (**$9,401.00** each Model).
Suffix -T for threaded inlet and outlet connections - Add **$175.00** for 2", **$349.00** for 3", **$698.00** for 4", **$873.00** for 6" and **$1048.00** for 8". **Suffix -AP** for anode pack - **$3,663.00**

MI-FISH FISH SCALE INTERCEPTOR

MI-FISH

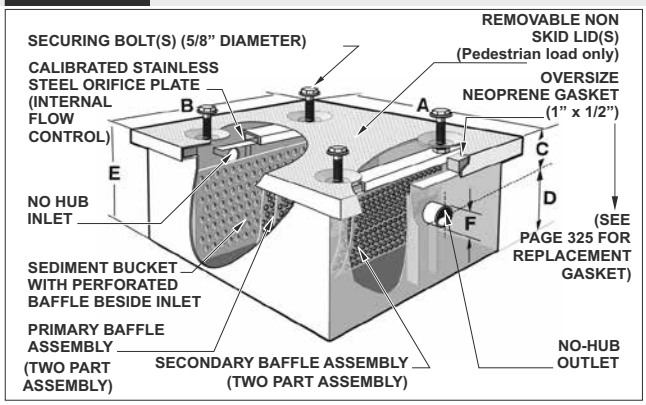

MODEL NO.	INTERCEPTOR LIQUID HOLDING CAPACITY (U.S.G.)	A IN	B IN	C IN	D IN	E IN	F IN	NO.OF LIDS / BOLTS	
MI-FISH-1	34.29	29.5	20	3	17	20	2	1	4
MI-FISH-2	40.74	29.5	20.5	4	20	24	3	1	4
MI-FISH-3	80.18	33.5	26	4	26	30	3	2	4
MI-FISH-4	114.03	37.5	30	4	28	32	3	2	8
MI-FISH-5	155.64	55.5	26	6	30	36	4	2	8
MI-FISH-6	213.80	67.5	28	8	32	40	6	3	12
MI-FISH-7	302.26	67.5	28	10	44	54	6	3	12
MI-FISH-8	404.91	67.5	30	12	54	66	6	3	12
MI-FISH-9	506.42	67.5	40	10	50	60	6	3	12
MI-FISH-10	868.65	91.5	40	8	54	62	6	4	16
MI-FISH-11	1017.35	98	50	12	54	66	6	4	16
MI-FISH-12	1536.00	98	50	12	80	92	6	4	16

MODEL NUMBER	US GPM	LIST PRICE	TILE RECESS 1/8" "-TL" (ADD)	BOLT ON EXTENSION (PER 6") (ADD)	ADDITIONAL "-C" UP TO 6" (ADD)	PER 1" OF "C" DIM. OVER "6" (ADD)	ANCHOR FLANGE "-FL"	FLANGE & MEMBRANE CLAMP "-FLM"	HEAVY DUTY REINFORCED LID "-HD" 10,000 LBS. LIVE LOAD (ADD)	REPLACEMENT BAFFLE "-RSSB" (ADD)
MI-FISH-1	50	$17,794.00	$14,201.00	$2,578.00	$2,578.00	$183.00	$1,544.00	$3,232.00	$11,237.00	$1,061.00
MI-FISH-2	70	$17,979.00	$19,682.00	$2,578.00	$2,578.00	$183.00	$1,905.00	$3,275.00	$11,799.00	$1,479.00
MI-FISH-3	100	$21,357.00	$20,226.00	$3,596.00	$3,596.00	$260.00	$2,155.00	$3,699.00	$12,419.00	$2,121.00
MI-FISH-4	130	$25,286.00	$21,357.00	$3,596.00	$3,596.00	$311.00	$2,391.00	$4,554.00	$17,113.00	$2,201.00
MI-FISH-5	150	$28,092.00	$23,600.00	$3,596.00	$3,596.00	$327.00	$2,756.00	$5,015.00	$21,980.00	$2,498.00
MI-FISH-6	200	$28,659.00	$24,725.00	$3,596.00	$3,596.00	$327.00	$2,768.00	$5,519.00	$25,066.00	$2,694.00
MI-FISH-7	300	$33,710.00	$26,975.00	$3,596.00	$3,596.00	$362.00	$2,799.00	$6,826.00	$44,655.00	$3,103.00
MI-FISH-8	400	$39,333.00	$29,219.00	$3,596.00	$3,596.00	$413.00	$3,093.00	$7,548.00	$60,161.00	$3,321.00
MI-FISH-9	500	$42,138.00	$30,343.00	$4,358.00	$4,358.00	$561.00	$3,302.00	$8,203.00	$73,655.00	$3,631.00
MI-FISH-10	700	$84,280.00	$39,333.00	$11,237.00	$11,237.00	$1,126.00	$3,932.00	$11,237.00	$112,369.00	$4,936.00
MI-FISH-11	700	$103,936.00	$47,762.00	$12,363.00	$12,363.00	$1,694.00	$5,066.00	$16,856.00	$140,466.00	$6,171.00
MI-FISH-12	700	$123,608.00	$56,188.00	$14,045.00	$14,045.00	$4,032.00	$5,624.00	$19,665.00	$168,555.00	$7,406.00

Suffix - AL, aluminum lid, Add (**$4,701.00** all Models). **Suffix -AP** for anode pack - **$3,663.00**.
Suffix -T for threaded inlet and outlet connections - Add **$175.00** for 2", **$349.00** for 3", **$698.00** for 4", **$873.00** for 6"

MI-LINT LINT INTERCEPTOR

MI-LINT

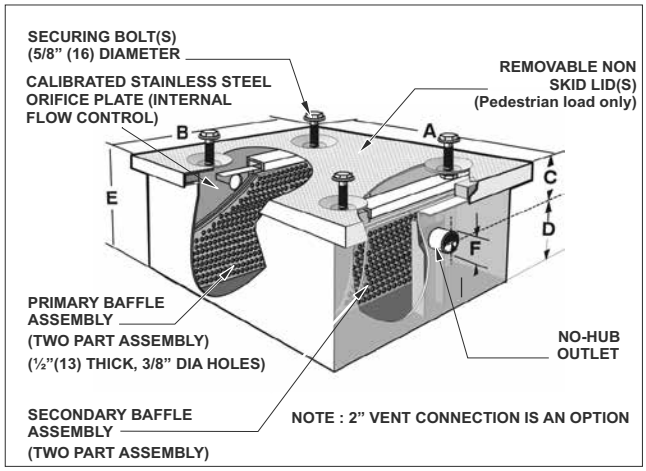

MODEL NO.	INTERCEPTOR LIQUID HOLDING CAPACITY (U.S.G.)	A IN	B IN	C IN	D IN	E IN	F IN	NO.OF LIDS / BOLTS	
MI-LINT-1	34.29	29.5	20	3	17	20	2	1	4
MI-LINT-2	40.74	29.5	20.5	4	20	24	3	1	4
MI-LINT-3	80.18	33.5	26	4	26	30	3	2	4
MI-LINT-4	114.03	37.5	30	4	28	32	4	2	8
MI-LINT-5	155.64	55.5	26	6	30	36	4	2	8
MI-LINT-6	213.80	67.5	28	8	32	40	6	3	12
MI-LINT-7	302.26	67.5	28	10	44	54	6	3	12
MI-LINT-8	404.91	67.5	30	12	54	66	6	3	12
MI-LINT-9	506.42	67.5	40	10	50	60	6	3	12
MI-LINT-10	868.65	91.5	40	8	54	62	6	4	16
MI-LINT-11	1017.35	98	50	12	54	66	6	4	16
MI-LINT-12	1536.00	98	50	12	80	92	6	4	16

NOTE: The "A" and "B" dimensions represent the largest dimension of the interceptor. Since the lid overhangs the body by 1/2" on all sides, deduct 1" from the stated dimensions in the charts above to determine the actual body length & width.

MODEL NUMBER	US GPM	LIST PRICE	SEDIMENT BUCKET "-SB" (ADD)	BOLT ON EXTENSION (PER 6") (ADD)	ADDITIONAL "-C" UP TO 6" (ADD)	PER 1" OF "C" DIM. OVER "6" (ADD)	ANCHOR FLANGE "-FL"	FLANGE & MEMBRANE CLAMP "-FLM"	HEAVY DUTY REINFORCED LID "-HD" 10,000 LBS. LIVE LOAD (ADD)	REPLACEMENT BAFFLE "-RSSB" (ADD)
MI-LINT-1	50	$15,051.00	$2,955.00	$2,578.00	$2,578.00	$183.00	$1,544.00	$3,232.00	$11,237.00	$1,061.00
MI-LINT-2	70	$17,516.00	$4,382.00	$2,578.00	$2,578.00	$183.00	$1,905.00	$3,275.00	$11,799.00	$1,479.00
MI-LINT-3	100	$20,609.00	$4,802.00	$3,596.00	$3,596.00	$260.00	$2,155.00	$3,699.00	$12,419.00	$2,121.00
MI-LINT-4	130	$23,048.00	$5,257.00	$3,596.00	$3,596.00	$311.00	$2,391.00	$4,554.00	$17,113.00	$2,201.00
MI-LINT-5	150	$24,285.00	$5,485.00	$3,596.00	$3,596.00	$327.00	$2,756.00	$5,015.00	$21,980.00	$2,498.00
MI-LINT-6	200	$24,945.00	$5,765.00	$3,596.00	$3,596.00	$327.00	$2,768.00	$5,519.00	$25,066.00	$2,694.00
MI-LINT-7	300	$29,002.00	$7,023.00	$3,596.00	$3,596.00	$362.00	$2,799.00	$6,826.00	$44,655.00	$3,103.00
MI-LINT-8	400	$33,062.00	$8,575.00	$3,596.00	$3,596.00	$413.00	$3,093.00	$7,548.00	$60,161.00	$3,321.00
MI-LINT-9	500	$37,127.00	$9,133.00	$4,358.00	$4,358.00	$561.00	$3,302.00	$8,203.00	$73,655.00	$3,631.00
MI-LINT-10	700	$78,620.00	$11,237.00	$11,237.00	$11,237.00	$1,126.00	$3,932.00	$11,237.00	$112,369.00	$4,936.00
MI-LINT-11	700	$95,486.00	$16,856.00	$12,363.00	$12,363.00	$1,694.00	$5,066.00	$16,856.00	$140,466.00	$6,171.00
MI-LINT-12	700	$117,931.00	$19,668.00	$14,045.00	$14,045.00	$4,032.00	$5,624.00	$19,665.00	$168,555.00	$7,406.00

Suffix - AL, aluminum lid, Add (**$4,701.00** all Models). **Suffix -AP** for anode pack - **$3,663.00.**
Suffix -T for threaded inlet and outlet connections - Add **$175.00** for 2", **$349.00** for 3", **$698.00** for 4", **$873.00** for 6". Add **$2,625.00** for 2" vent connection.

Design and dimensions are subject to modification. Prices do not include applicable taxes. Visit **www.mifab.com** for the most recent product information.
MIFAB®, Inc., 1321 West 119th Street, Chicago, Illinois 60643-5109, USA Toll Free: 1-800-465-2736 • Fax: 1-773-341-3049
All sales subject to MIFAB's® Terms & Warranties. Please refer to inside front cover. sales@mifab.com • Canada Toll Free: 1-800-387-3880

MI-RICE RICE INTERCEPTOR

MI-RICE

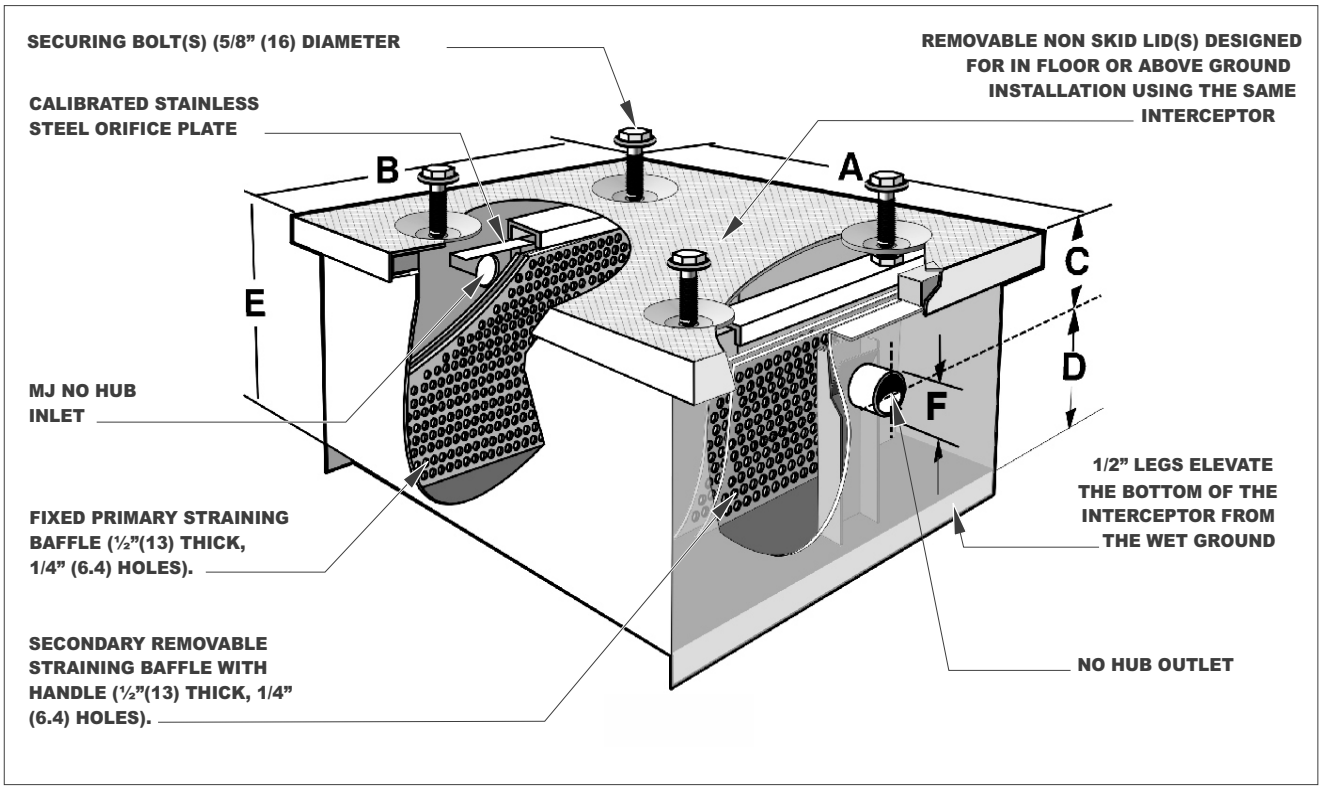

MODEL NO.	US GPM	A IN	B IN	C IN	D IN	E IN	F IN	NO.OF LIDS / BOLTS	
MI-RICE-1	50	29.5	20	3	17	20	2	1	4
MI-RICE-2	70	29.5	20.5	4	20	24	3	1	4
MI-RICE-3	100	33.5	26	4	26	30	3	2	4
MI-RICE-4	130	37.5	30	4	28	32	3	2	8
MI-RICE-5	150	55.5	26	6	30	36	4	2	8
MI-RICE-6	200	67.5	28	8	32	40	6	3	12
MI-RICE-7	300	67.5	28	10	44	54	6	3	12
MI-RICE-8	400	67.5	30	12	54	66	6	3	12
MI-RICE-9	500	67.5	40	10	50	60	6	3	12
MI-RICE-10	700	91.5	40	8	54	62	6	4	16
MI-RICE-11	700	98	50	12	54	66	6	4	16
MI-RICE-12	700	98	50	12	80	92	6	4	16

NOTE: The "A" and "B" dimensions represent the largest dimension of the interceptor (lid). Since the lid overhangs the body by 1/2" on all sides, deduct 1" from the stated dimensions in the charts above to determine the actual body length & width.

MODEL NUMBER	US GPM	LIST PRICE	SEDIMENT BUCKET "-SB" (ADD)	BOLT ON EXTENSION (PER 6") (ADD)	ADDITIONAL "-C" UP TO 6" (ADD)	PER 1" OF "C" DIM. OVER "6" (ADD)	ANCHOR FLANGE "-FL"	FLANGE & MEMBRANE CLAMP "-FLM"	HEAVY DUTY REINFORCED LID "-HD" 10,000 LBS. LIVE LOAD (ADD)	REPLACEMENT BAFFLE "-RSSB" (ADD)
MI-RICE-1	50	$15,051.00	$2,955.00	$2,578.00	$2,578.00	$183.00	$1,544.00	$3,232.00	$11,237.00	$1,061.00
MI-RICE-2	70	$17,516.00	$4,382.00	$2,578.00	$2,578.00	$183.00	$1,905.00	$3,275.00	$11,799.00	$1,479.00
MI-RICE-3	100	$20,609.00	$4,802.00	$3,596.00	$3,596.00	$260.00	$2,155.00	$3,699.00	$12,419.00	$2,121.00
MI-RICE-4	130	$23,048.00	$5,257.00	$3,596.00	$3,596.00	$311.00	$2,391.00	$4,554.00	$17,113.00	$2,201.00
MI-RICE-5	150	$24,285.00	$5,485.00	$3,596.00	$3,596.00	$327.00	$2,756.00	$5,015.00	$21,980.00	$2,498.00
MI-RICE-6	200	$24,945.00	$5,765.00	$3,596.00	$3,596.00	$327.00	$2,768.00	$5,519.00	$25,066.00	$2,694.00
MI-RICE-7	300	$29,002.00	$7,023.00	$3,596.00	$3,596.00	$362.00	$2,799.00	$6,826.00	$44,655.00	$3,103.00
MI-RICE-8	400	$33,062.00	$8,575.00	$3,596.00	$3,596.00	$413.00	$3,093.00	$7,548.00	$60,161.00	$3,321.00
MI-RICE-9	500	$37,127.00	$9,133.00	$4,358.00	$4,358.00	$561.00	$3,302.00	$8,203.00	$73,655.00	$3,631.00
MI-RICE-10	700	$78,620.00	$11,237.00	$11,237.00	$11,237.00	$1,126.00	$3,932.00	$11,237.00	$112,369.00	$4,936.00
MI-RICE-11	700	$95,486.00	$16,856.00	$12,363.00	$12,363.00	$1,694.00	$5,066.00	$16,856.00	$140,466.00	$6,171.00
MI-RICE-12	700	$117,931.00	$19,668.00	$14,045.00	$14,045.00	$4,032.00	$5,624.00	$19,665.00	$168,555.00	$7,406.00

Suffix - AL, aluminum lid, Add (**$4,701.00** all Models).
Suffix -AP for anode pack - **$3,663.00**. **Suffix -T** for threaded inlet and outlet connections - Add **$175.00** for 2", **$349.00** for 3", **$698.00** for 4", **$873.00** for 6"

MI-G-AD AUTOMATIC RECOVERY GREASE INTERCEPTOR

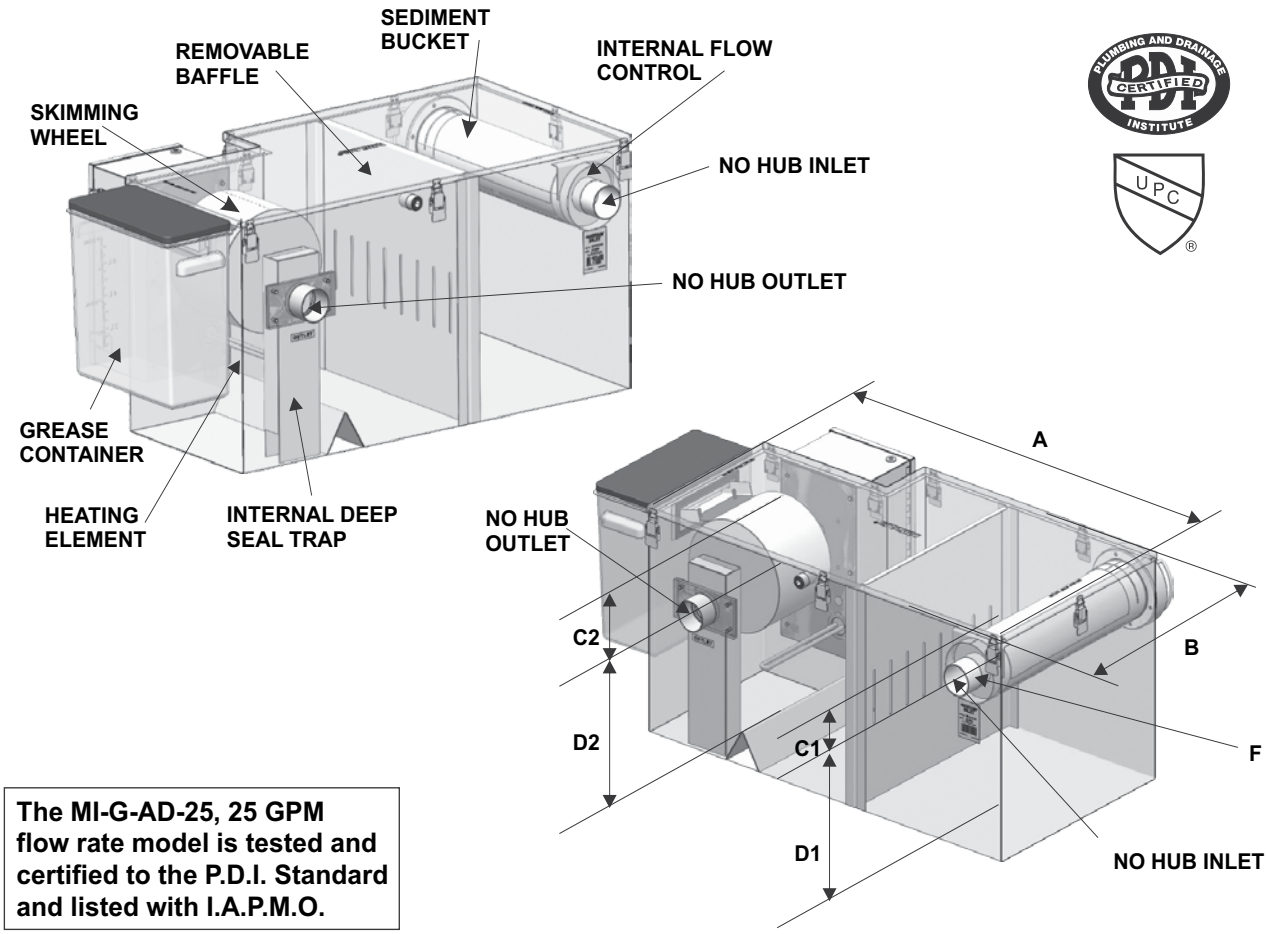

The MI-G-AD-25, 25 GPM flow rate model is tested and certified to the P.D.I. Standard and listed with I.A.P.M.O.

The MI-G-AD Series is an automatic recovery grease interceptor that is self cleaning and requires minimal maintenance. The unit intercepts solids with an internal sediment bucket and extracts free floating oil and grease from the unit automatically into a separate holding compartment.

The MI-G-AD Series should be used in large restaurants, kitchens, institutions, industrial facilities such as food processing and packaging plants where fats, oil and grease (FOG) drains into the wastewater.

The MI-G-AD includes a stainless steel body with a deep seal trap, sewer gas stopper, air relief bypass, grease and oil collection container, 24 hour timer with heating element and automatic skimming drum.

MODEL NUMBER	US GPM	GREASE CAP. LBS.	A IN	B IN	C1 IN	C2 IN	D1 IN	D2 IN	E OVERALL HEIGHT	F IN
MI-G-AD-15	15	30	24.5"	14"	4"	9"	9.5"	4.5"	13.5"	2"
MI-G-AD-20	20	40	24.5"	14"	4"	7.5"	9.5"	6"	13.5"	2"
MI-G-AD-25	25	50	26"	33.88"	17.75"	6.69"	14"	11.25"	17.94"	3"
MI-G-AD-35	35	70	34.5"	16"	4"	8"	12.5"	8.5"	16.5"	3"
MI-G-AD-50	50	100	39.5"	16"	5"	8.5"	12.5"	9"	17.5"	3"
MI-G-AD-75	75	150	43.5"	16"	5"	9"	16.5"	12.5"	21.5"	4"
MI-G-AD-100	100	200	60"	21"	4.5"	9"	20"	15.5"	24.5"	4"

Design and dimensions are subject to modification. Prices do not include applicable taxes. Visit **www.mifab.com** for the most recent product information.
MIFAB®, Inc., 1321 West 119th Street, Chicago, Illinois 60643-5109, USA
Toll Free: 1-800-465-2736 • Fax: 1-773-341-3049
sales@mifab.com • Canada Toll Free: 1-800-387-3880
All sales subject to MIFAB's® Terms & Warranties. Please refer to inside front cover.

MI-E-G 4 TO 50 US G.P.M. ELECTRONIC GREASE INTERCEPTOR MI-E-G

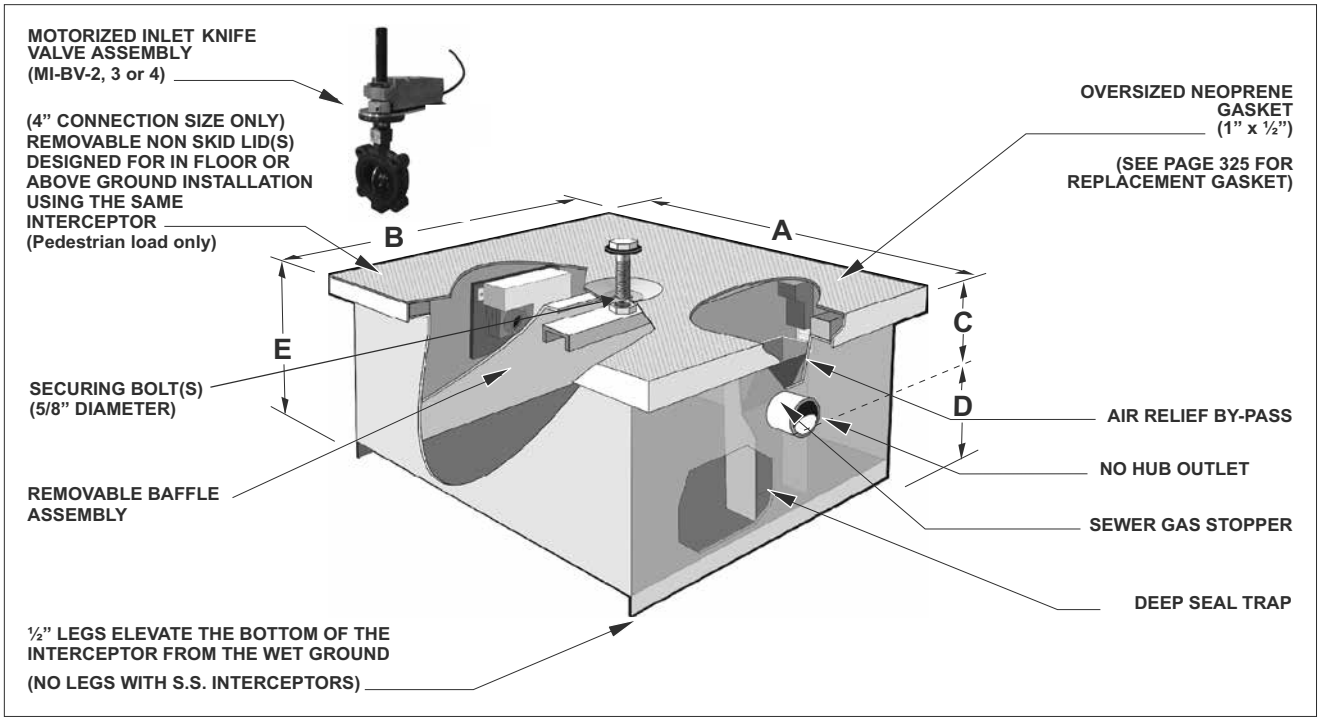

MIFAB's electronic grease interceptor monitors the grease level within the interceptor. A control panel built into a standard electrical box consists of a multi-level LED display that alerts the operator to the current grease level. A green light on the control panel indicates normal operating conditions. At 50% grease storage capacity, the green light will change to yellow. At 75% grease storage capacity, the yellow light changes to red, the alarm will sound, and the inlet will be closed by a motorized valve. The closed inlet prevents additional grease from entering the interceptor and from discharging into the piping system. The operator must remove the lid of the interceptor and remove the accumulated grease and clean off the grease sensing probe to ensure that the motorized valve opens and regular operation can resume. A back-up battery ensures continued operation during short power failures and closes for safety during extended failures. The control panel and internal controls are pre-wired by MIFAB. 115 volt main to 24 volt transformer and low voltage wiring from the control panel to probe inside of the interceptor to be provided by others.

MIFAB is a recognized industry leader in the field of interceptor design and production.
As such, we offer a variety of specialized options and site-specific applications too numerous to list in this price guide. For features such as sacrificial anode packs, all stainless steel construction and a variety of other special features, please see our Engineering Catalog or consult your local MIFAB representative.

MODEL NO.	US GPM	CAP. LBS.	LIQUID HOLDING CAPACITY (U.S.G.)	A IN	B IN	C IN	D IN	E IN	F IN	NO. OF LIDS	NO. OF BOLTS
MI-E-G-0	4	8	4.43	16.75	11.25	7.5	8.5	16.0	2	1	1
MI-E-G-1	7	14	6.00	17.75	13.75	7.5	8.5	16.0	2	1	1
MI-E-G-2	10	20	9.74	21.25	15.75	7.5	9.5	17.0	2	1	1
MI-E-G-3	15	30	13.59	23.75	15.75	7.5	11.5	19.0	2	1	1
MI-E-G-4	20	40	16.18	23.75	15.75	7.5	14.0	21.5	3	1	1
MI-E-G-5	25	50	23.34	27.75	18.75	7.5	14.0	21.5	3	1	1
MI-E-G-6	35	70	41.31	31.25	23.75	7.5	16.5	24.0	3	2	4
MI-E-G-7	50	100	46.82	31.25	23.75	7.5	16.5	26.0	3	2	4

NOTE: The "A" and "B" dimensions represent the largest dimension of the interceptor. since the lid overhangs the body by 1/2" (13) on all sides, deduct 1" (25) from the stated dimensions in the charts below to determine the actual body length & width.

NOTE: The"C" dimension is from the center of the inlet/outlet (invert) to the top of the interceptor inlet & outlet "C" dimensions are always the same.

MODEL NUMBER	US GPM	LIST PRICE	SEDIMENT BUCKET "-SB"	BOLT ON EXTENSION (PER 6") (ADD)	ADDITIONAL "-C" UP TO 6" (ADD)	ANCHOR FLANGE "-FL"	PER 1" OF "C" DIM. OVER "6" (ADD)	FLANGE & MEMBRANE CLAMP "-FLM"	HEAVY DUTY REINFORCED LID "-HD" 10,000 LBS. LIVE LOAD (ADD)
MI-E-G-0	4	$20,243.00	$2,343.00	$5,565.00	$5,565.00	$310.00	$1,949.00	$2,344.00	$7,245.00
MI-E-G-1	7	$21,625.00	$2,343.00	$5,565.00	$5,565.00	$310.00	$1,949.00	$2,344.00	$7,980.00
MI-E-G-2	10	$22,498.00	$2,343.00	$6,239.00	$6,239.00	$316.00	$1,949.00	$2,344.00	$9,752.00
MI-E-G-3	15	$25,289.00	$2,343.00	$6,409.00	$6,409.00	$355.00	$1,949.00	$2,344.00	$11,156.00
MI-E-G-4	20	$27,214.00	$2,400.00	$6,409.00	$6,409.00	$400.00	$2,103.00	$2,344.00	$11,288.00
MI-E-G-5	25	$28,517.00	$2,536.00	$7,286.00	$7,286.00	$456.00	$2,188.00	$2,613.00	$11,919.00
MI-E-G-6	35	$31,307.00	$2,714.00	$7,659.00	$7,659.00	$499.00	$2,301.00	$2,712.00	$16,399.00
MI-E-G-7	50	$36,052.00	$4,060.00	$8,281.00	$8,281.00	$576.00	$2,344.00	$3,086.00	$17,995.00

Suffix -AL, for aluminum lid, Add - (MI-E-G-0 to MI-E-G-3, **$1,781.00**), (MI-E-G-4 to MI-E-G-7, **$2,495.00**) NOTE: **Suffix -DP** for dosing pump - Add (**$5,517.00** all Models).
Suffix -T for threaded inlet and outlet connections - Add **$175.00** for 2", **$349.00** for 3". **Suffix -AP** for anode pack - **$3,663.00**

MI-E-O 10 TO 500 US G.P.M. ELECTRONIC OIL INTERCEPTORS MI-E-O

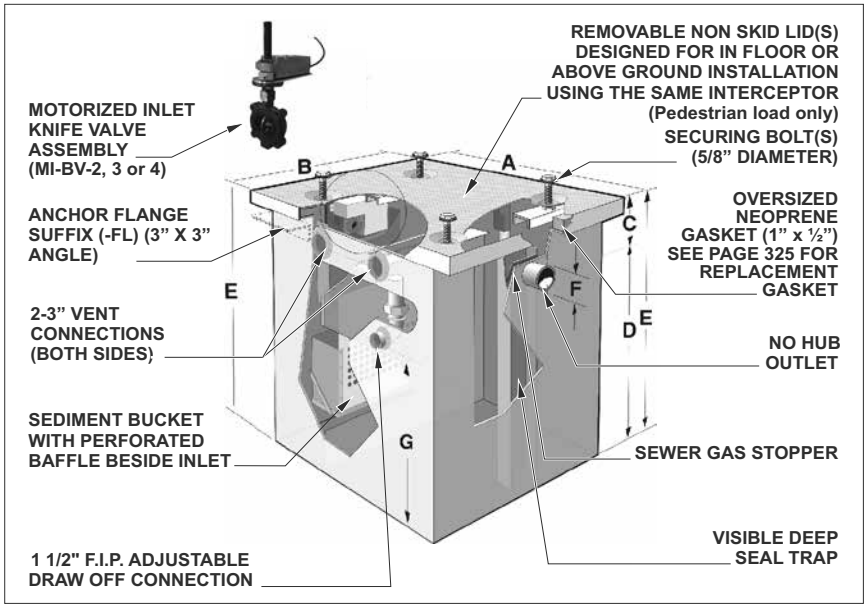

MIFAB's electronic oil interceptor monitors the oil level within the interceptor. A control panel built into a standard electrical box consists of a multi-level LED display that alerts the operator to the current oil level. A green light on the control panel indicates normal operating conditions. At 50% oil storage capacity, the green light will change to yellow. At 75% oil storage capacity, the yellow light changes to red, the alarm will sound, and the inlet will be closed by a motorized valve. The closed inlet prevents additional oil from entering the interceptor and from discharging into the piping system. The operator must remove the lid of the interceptor and remove the accumulated oil and clean off the oil sensing probe to ensure that the motorized valve opens and regular operation can resume. A back-up battery ensures continued operation during short power failures and closes for safety during extended failures. The control panel and internal controls are pre-wired by MIFAB. 115 volt main to 24 volt transformer and low voltage wiring from the control panel to probe inside of the interceptor to be provided by others.

MODEL NO.	US GPM	A IN	B IN	C IN	D IN	E IN	F IN	G IN	LIQUID HOLDING CAP. USG	LIQUID HOLDING CAP. CU. FT.	NO. OF LIDS	NO. OF BOLTS
MI-E-O-A	10	21.25	15.75	3.5	9.5	13	2	4	9.73	1.00	1	1
MI-E-O-B	15	23.75	15.75	3.5	11.5	15	2	6	13.59	1.20	1	1
MI-E-O-C	20	23.75	15.75	3.5	14	17.5	3	8	20.07	1.35	1	1
MI-E-O-1	25	28	22	6	26	32	3	19	55.15	6.25	1	4
MI-E-O-2	35	34	24	6	26	32	3	19	74.67	8.40	1	4
MI-E-O-3	50	34	24	6	28	34	3	21	80.76	9.10	1	4
MI-E-O-4	75	48	34	8	28	36	4	21	165.68	19.98	2	8
MI-E-O-5	100	51	36	8	28	36	4	21	245.21	22.76	2	8
MI-E-O-6	125	53	36	8	28	36	4	21	195.17	24.73	2	8
MI-E-O-7	150	58	36	10	28	38	4	21	214.30	28.60	3	12
MI-E-O-8	200	68	38	10	32	42	4	25	308.57	42.88	6	24
MI-E-O-9	250	74	40	12	38	50	4	31	426.39	53.44	6	24
MI-E-O-10	300	78	44	12	40	52	4	33	549.71	64.30	6	24
MI-E-O-11	350	80	46	12	40	52	6	33	621.30	69.25	6	24
MI-E-O-12	400	82	48	12	42	54	6	35	664.52	78.38	6	24
MI-E-O-13	450	84	50	12	42	54	6	35	690.91	83.95	6	24
MI-E-O-14	500	86	52	12	46	58	6	39	781.82	98.92	6	24

NOTE: The "A" and "B" dimensions represent the largest dimension of the interceptor. Since the lid overhangs the body by 1/2" on all sides, deduct 1" from the stated dimensions in the charts below to determine the actual body length & width.

NOTE: The"C" dimension is from the center of the inlet/outlet (invert) to the top of the interceptor Inlet & outlet "C"dimensions are always the same.

MODEL NUMBER	US GPM	LIST PRICE	BOLT ON EXTENSION (PER 6") (ADD)	ADDITIONAL "-C" UP TO 6" (ADD) UP TO 10" "-C" FOR MI-E-O-4 & LARGER	PER 1" OF "C" DIM. OVER "6" (ADD) OVER 10" FOR MI-E-O-4 & LARGER	ANCHOR FLANGE "-FL"	FLANGE & MEMBRANE CLAMP "-FLM"	HEAVY DUTY REINFORCED LID "-HD" 10,000 LBS. LIVE LOAD (ADD)	HOLDING TANK "-HT" (ADD)
MI-E-O-A	10	$27,056.00	$7,142.00	$7,142.00	$316.00	$1,949.00	$2,344.00	$8,113.00	$3,986.00
MI-E-O-B	15	$30,062.00	$7,237.00	$7,237.00	$355.00	$1,949.00	$2,344.00	$8,721.00	$5,196.00
MI-E-O-C	20	$32,373.00	$7,440.00	$7,440.00	$400.00	$2,103.00	$2,344.00	$9,235.00	$6,292.00
MI-E-O-1	25	$33,522.00	$7,659.00	$7,659.00	$456.00	$2,188.00	$2,613.00	$9,752.00	$6,819.00
MI-E-O-2	35	$36,664.00	$7,946.00	$7,946.00	$499.00	$2,301.00	$2,712.00	$10,778.00	$8,276.00
MI-E-O-3	50	$42,757.00	$9,484.00	$9,484.00	$576.00	$2,344.00	$3,086.00	$11,288.00	$11,150.00
MI-E-O-4	75	$62,864.00	$5,341.00	$5,341.00	$355.00	$2,553.00	$4,623.00	$11,919.00	$19,333.00
MI-E-O-5	100	$66,329.00	$5,571.00	$5,571.00	$380.00	$2,856.00	$5,174.00	$16,399.00	$20,988.00
MI-E-O-6	125	$73,773.00	$5,794.00	$5,794.00	$410.00	$3,423.00	$5,794.00	$17,995.00	$24,403.00
MI-E-O-7	150	$76,976.00	$6,019.00	$6,019.00	$434.00	$3,986.00	$6,409.00	$21,057.00	$25,944.00
MI-E-O-8	200	$99,782.00	$8,610.00	$8,610.00	$456.00	$4,270.00	$7,491.00	$24,017.00	$36,558.00
MI-E-O-9	250	$112,012.00	$11,191.00	$11,191.00	$499.00	$5,706.00	$9,716.00	$33,146.00	$42,475.00
MI-E-O-10	300	$116,442.00	$13,602.00	$13,602.00	$561.00	$6,451.00	$10,899.00	$42,551.00	$48,093.00
MI-E-O-11	350	$135,973.00	$16,114.00	$16,114.00	$628.00	$7,186.00	$12,075.00	$50,176.00	$53,701.00
MI-E-O-12	400	$146,204.00	$18,795.00	$18,795.00	$690.00	$7,635.00	$12,832.00	$57,784.00	$61,821.00
MI-E-O-13	450	$164,644.00	$21,936.00	$21,936.00	$725.00	$8,086.00	$13,600.00	$66,029.00	$70,640.00
MI-E-O-14	500	$180,054.00	$25,184.00	$25,184.00	$747.00	$8,538.00	$14,368.00	$70,600.00	$77,972.00

Add Suffix -AL, for aluminum lid, Add - (MI-E-O-A to MI-E-O-3, **$2,351.00**), (MI-E-O-4 to MI-E-O-8, **$4,230.00**), (MI-E-O-9 to MI-E-O-14, **$7,053.00**).
Suffix -T for threaded inlet and outlet connections - Add **$175.00** for 2", **$349.00** for 3", **$698.00** for 4", **$873.00** for 6". **Suffix -AP** for anode pack **-$3,663.00**

Design and dimensions are subject to modification. Prices do not include applicable taxes. Visit **www.mifab.com** for the most recent product information.
MIFAB®, Inc., 1321 West 119th Street, Chicago, Illinois 60643-5109, USA Toll Free: 1-800-465-2736 • Fax: 1-773-341-3049
All sales subject to MIFAB's® Terms & Warranties. Please refer to inside front cover. sales@mifab.com • Canada Toll Free: 1-800-387-3880

MI-E-O-HU 10 TO 500 US G.P.M. ELECTRONIC OIL INTERCEPTORS WITH INTEGRAL OIL STORAGE TANK MI-E-O-HU

MIFAB's electronic oil interceptor monitors the oil level within the interceptor. A control panel built into a standard electrical box consists of a multi-level LED display that alerts the operator to the current oil level. A green light on the control panel indicates normal operating conditions. At 50% oil storage capacity, the green light will change to yellow. At 75% oil storage capacity, the yellow light changes to red, the alarm will sound, and the inlet will be closed by a motorized valve. The closed inlet prevents additional oil from entering the interceptor and from discharging into the piping system. The operator must remove the lid of the interceptor and remove the accumulated oil and clean off the oil sensing probe to ensure that the motorized valve opens and regular operation can resume. A back-up battery ensures continued operation during short power failures and closes for safety during extended failures. The control panel and internal controls are pre-wired by MIFAB. 115 volt main to 24 volt transformer and low voltage wiring from the control panel to probe inside of the interceptor to be provided by others.

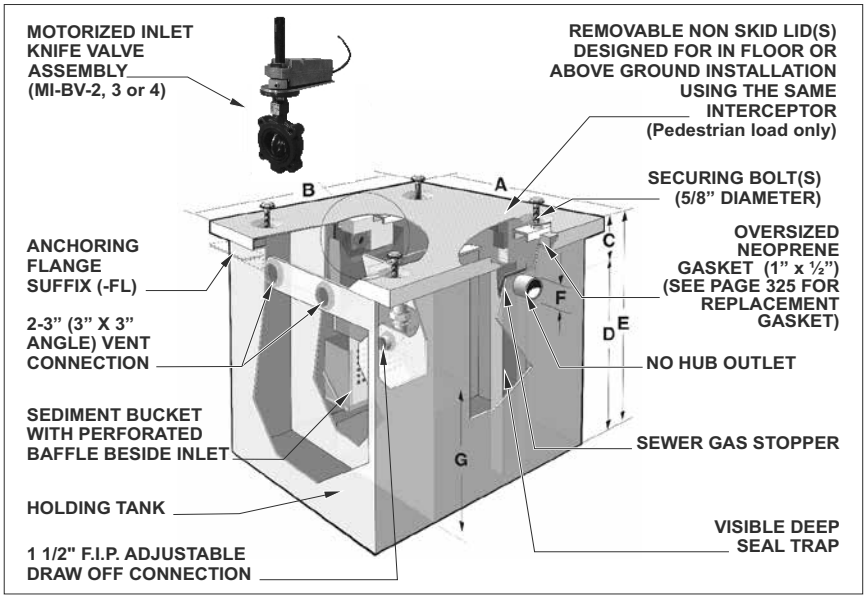

MODEL NO.	US GPM	A IN	B IN	C IN	D IN	E IN	F IN	G IN	H IN	INTERCEPTOR LIQUID HOLDING CAPACITY (U S.G.) .	HOLDING TANK CAP. CU. FT. of liquid	Lbs. of liquid	U.S.G of liquid	TOTAL OPERATING Lbs.	NO. OF LIDS	NO. OF BOLTS
MI-E-O-HU-A	10	24	26	4	9	13	2	4	10	10.66	1.2	74.93	8.98	326.12	1	4
MI-E-O-HU-B	15	26	26.50	4	11	15	2	6	10	15.06	1.64	102.40	12.27	400.08	1	4
MI-E-O-HU-C	20	26	26.50	4	13.50	17.5	3	8	10	18.08	1.92	119.88	14.36	457.50	1	4
MI-E-O-HU-1	25	29	46	4.5	25.5	30	3	20	21.5	63.12	8.69	542.60	65.00	1466.71	2	8
MI-E-O-HU-2	35	37	44.5	5	26	31	3	20.5	15.5	100.23	8.16	509.51	61.04	1880.36	4	16
MI-E-O-HU-3	50	43	65.5	6	26	32	3	20.5	26.0	163.07	15.65	977.19	117.06	3087.07	4	16
MI-E-O-HU-4	75	49	65	9.5	26.5	36	4	20.5	22.5	201.89	16.27	1015.90	121.70	3513.86	4	16
MI-E-O-HU-5	100	58	90	9.5	26.5	36	4	20.5	37	302.91	31.78	1984.34	237.71	5866.90	4	16
MI-E-O-HU-6	125	62	90	12	28	40	4	22	37	344.42	35.97	2245.97	269.06	6580.28	9	36
MI-E-O-HU-7	150	66	76	14	30	44	4	24	28	356.85	31.11	1942.51	232.70	6536.30	9	36
MI-E-O-HU-8	200	73.25	90	17	30.5	48	4	24.5	36.5	452.72	46.39	2896.59	347.00	8803.22	9	36
MI-E-O-HU-9	250	73.25	90	15.5	35.5	51	4	29.5	31	588.97	46.65	2912.83	348.94	9997.11	9	36
MI-E-O-HU-10	300	94.875	86	15.5	36.5	52	6	29.5	23.5	814.82	46.16	2882.23	345.28	12312.77	9	36
MI-E-O-HU-11	350	100.875	94	16.5	43.5	60	6	36.5	30.5	1066.06	76.01	4746.06	568.55	16624.95	9	36
MI-E-O-HU-12	400	107.875	91	17	43	60	6	36	28.5	1109.11	75.17	4693.61	562.27	17052.63	9	36
MI-E-O-HU-13	450	118.875	83	17	43	60	6	36	26	1113.05	75.70	4726.71	566.24	17236.29	9	36
MI-E-O-HU-14	500	118.875	83	20	46	66	6	39	24	1240.03	74.75	4667.39	559.13	18483.51	9	36

NOTE: The "A" and "B" dimensions represent the largest dimension of the interceptor. Since the lid overhangs the body by 1/2" (13) on all sides, deduct 1" (25) from the stated dimensions in the charts above to determine the actual body length & width.

NOTE: The"C" dimension is from the center of the inlet/outlet (invert) to the top of the interceptor. Inlet & outlet "C"dimensions are always the same.

MODEL NUMBER	US GPM	LIST PRICE	BOLT ON EXTENSION (PER 6") (ADD)	ADDITIONAL "-C" UP TO 6" (ADD) UP TO 10" "-C"FOR MI-E-O-HU-4 & LARGER	PER 1" OF "C" DIM. OVER "6" (ADD) OVER 10" FOR MI-E-O-HU-4 AND LARGER	ANCHOR FLANGE "-FL"	FLANGE & MEMBRANE CLAMP "-FLM"	HEAVY DUTY REINFORCED LID "-HD" 10,000 LB.S LIVE LOAD (ADD)
MI-E-O-HU-A	10	**$28,589.00**	**$10,721.00**	**$10,721.00**	**$450.00**	**$2,914.00**	**$3,502.00**	**$12,932.00**
MI-E-O-HU-B	15	**$33,018.00**	**$10,854.00**	**$10,854.00**	**$545.00**	**$2,914.00**	**$3,502.00**	**$13,736.00**
MI-E-O-HU-C	20	**$36,440.00**	**$11,177.00**	**$11,177.00**	**$621.00**	**$3,155.00**	**$3,502.00**	**$14,546.00**
MI-E-O-HU-1	25	**$38,128.00**	**$11,478.00**	**$11,478.00**	**$674.00**	**$3,294.00**	**$3,903.00**	**$15,345.00**
MI-E-O-HU-2	35	**$42,739.00**	**$11,906.00**	**$11,906.00**	**$734.00**	**$3,424.00**	**$4,043.00**	**$16,161.00**
MI-E-O-HU-3	50	**$51,752.00**	**$14,221.00**	**$14,221.00**	**$864.00**	**$3,502.00**	**$4,621.00**	**$16,987.00**
MI-E-O-HU-4	75	**$78,708.00**	**$8,010.00**	**$8,010.00**	**$545.00**	**$3,854.00**	**$6,960.00**	**$17,855.00**
MI-E-O-HU-5	100	**$83,945.00**	**$8,353.00**	**$8,353.00**	**$571.00**	**$4,314.00**	**$7,764.00**	**$24,616.00**
MI-E-O-HU-6	125	**$95,011.00**	**$8,702.00**	**$8,702.00**	**$621.00**	**$5,125.00**	**$8,702.00**	**$26,984.00**
MI-E-O-HU-7	150	**$99,851.00**	**$9,034.00**	**$9,034.00**	**$651.00**	**$5,981.00**	**$9,619.00**	**$31,591.00**
MI-E-O-HU-8	200	**$134,054.00**	**$12,932.00**	**$12,932.00**	**$674.00**	**$6,384.00**	**$11,234.00**	**$36,038.00**
MI-E-O-HU-9	250	**$152,604.00**	**$16,779.00**	**$16,779.00**	**$755.00**	**$8,567.00**	**$14,546.00**	**$49,693.00**
MI-E-O-HU-10	300	**$170,553.00**	**$20,418.00**	**$20,418.00**	**$864.00**	**$9,673.00**	**$16,692.00**	**$63,825.00**
MI-E-O-HU-11	350	**$185,390.00**	**$24,164.00**	**$24,164.00**	**$953.00**	**$10,778.00**	**$18,101.00**	**$75,279.00**
MI-E-O-HU-12	400	**$210,968.00**	**$28,197.00**	**$28,197.00**	**$1,032.00**	**$11,442.00**	**$19,103.00**	**$86,664.00**
MI-E-O-HU-13	450	**$238,650.00**	**$32,885.00**	**$32,885.00**	**$1,085.00**	**$12,113.00**	**$20,415.00**	**$99,055.00**
MI-E-O-HU-14	500	**$261,736.00**	**$37,650.00**	**$37,650.00**	**$1,135.00**	**$12,830.00**	**$21,547.00**	**$105,927.00**

Add Suffix -AL, for aluminum lid, Add - (MI-E-O-HU-A to MI-E-O-HU-3, **$4,230.00**), (MI-E-O-HU-4 to MI-E-O-HU-8, **$5,877.00**), (MI-E-O-HU-9 to MI-E-O-HU-14, **$9,401.00**).
Suffix -T for threaded inlet and outlet connections - Add **$175.00** for 2", **$349.00** for 3", **$698.00** for 4", **$873.00** for 6". **Suffix -AP** for anode pack - **$3,663.00**

MI-G-BO BOLT ON (FIXED) EXTENSIONS FOR MI-G GREASE INTERCEPTORS MI-G-BO

(Shipped with sealing gasket and lockdown hardware)

MODEL NO.	USE WITH	US GPM	LIST PRICE	A IN	B IN	E IN	NO. BOLTS
MI-G-BO-4-6	MI-G-4	20	$6,409.00	23.75	15.75	6	1
MI-G-BO-4-12	MI-G-4	20	$12,818.00	23.75	15.75	12	1
MI-G-BO-5-6	MI-G-5	25	$7,286.00	27.75	18.75	6	1
MI-G-BO-5-12	MI-G-5	25	$14,572.00	27.75	18.75	12	1
MI-G-BO-6-6	MI-G-6	35	$7,659.00	31.25	23.25	6	4
MI-G-BO-6-12	MI-G-6	35	$15,317.00	31.25	23.25	12	4
MI-G-BO-7-6	MI-G-7	50	$8,281.00	31.25	23.25	6	4
MI-G-BO-7-12	MI-G-7	50	$16,563.00	31.25	23.25	12	4

Note : All bolt on extensions are made with 10 gauge, powder epoxy coated steel.

XL-MI-G-BO BOLT ON (FIXED) EXTENSIONS FOR XL-MI-G GREASE INTERCEPTORS XL-MI-G-BO

(Shipped with sealing gasket and lockdown hardware)

MODEL NO.	USE WITH	US GPM	LIST PRICE	A IN	B IN	E IN	NO. BOLTS
XL-MI-G-BO-0-10	XL-MI-G-0	75	$4,458.00	42	28	6	8
XL-MI-G-BO-1-10	XL-MI-G-1	100	$5,007.00	55	37	6	8
XL-MI-G-BO-2-10	XL-MI-G-2	125	$5,296.00	58	38	6	12
XL-MI-G-BO-3-10	XL-MI-G-3	150	$5,571.00	61	39	6	12
XL-MI-G-BO-4-10	XL-MI-G-4	200	$10,023.00	70	44	6	24
XL-MI-G-BO-5-10	XL-MI-G-5	250	$12,449.00	75	46	6	24
XL-MI-G-BO-6-10	XL-MI-G-6	300	$14,877.00	77	49	6	24
XL-MI-G-BO-7-10	XL-MI-G-7	350	$17,474.00	80	51	6	24
XL-MI-G-BO-8-10	XL-MI-G-8	400	$20,158.00	84	56	6	32
XL-MI-G-BO-9-10	XL-MI-G-9	500	$25,977.00	92	61	6	32
XL-MI-G-BO-10-10	XL-MI-G-10	600	$29,925.00	102	74	6	36
XL-MI-G-BO-11-10	XL-MI-G-11	750	$36,540.00	108	76	6	36

NOTE: Remove lid of existing interceptor to install extension. To determine height of bolt on extension, measure from top of neoprene gasket to desired ground level. Then, add ½" to that dimension to allow for bolt on to settle into interceptor.

MI-O-BO BOLT ON (FIXED)EXTENSIONS FOR MI-O(-HU) OIL INTERCEPTORS MI-O-HU-BO

MODEL NO.	USE WITH	LIST PRICE
MI-O-BO-A-6	MI-O-A	$7,142.00
MI-O-BO-B-6	MI-O-B	$7,237.00
MI-O-BO-C-6	MI-O-C	$7,440.00
MI-O-BO-1-6	MI-O-1	$7,659.00
MI-O-BO-2-6	MI-O-2	$7,946.00
MI-O-BO-3-6	MI-O-3	$9,484.00
MI-O-BO-4-10	MI-O-4	$5,341.00
MI-O-BO-5-10	MI-O-5	$5,571.00
MI-O-BO-6-10	MI-O-6	$5,794.00
MI-O-BO-7-10	MI-O-7	$6,019.00
MI-O-BO-8-10	MI-O-8	$8,610.00
MI-O-BO-9-10	MI-O-9	$11,191.00
MI-O-BO-10-10	MI-O-10	$13,602.00
MI-O-BO-11-10	MI-O-11	$16,114.00
MI-O-BO-12-10	MI-O-12	$18,795.00
MI-O-BO-13-10	MI-O-13	$21,936.00
MI-O-BO-14-10	MI-O-14	$25,090.00

MI-O-HU-BO			
MODEL NO.	USE WITH	US GPM	LIST PRICE
MI-O-HU-BO-A-6	MI-O-HU-A	10	$10,721.00
MI-O-HU-BO-B-6	MI-O-HU-B	15	$10,854.00
MI-O-HU-BO-C-6	MI-O-HU-C	20	$11,177.00
MI-O-HU-BO-1-6	MI-O-HU-1	25	$11,478.00
MI-O-HU-BO-2-6	MI-O-HU-2	35	$11,906.00
MI-O-HU-BO-3-6	MI-O-HU-3	50	$14,221.00
MI-O-HU-BO-4-10	MI-O-HU-4	75	$8,010.00
MI-O-HU-BO-5-10	MI-O-HU-5	100	$8,353.00
MI-O-HU-BO-6-10	MI-O-HU-6	125	$8,702.00
MI-O-HU-BO-7-10	MI-O-HU-7	150	$9,034.00
MI-O-HU-BO-8-10	MI-O-HU-8	200	$12,932.00
MI-O-HU-BO-9-10	MI-O-HU-9	250	$16,779.00
MI-O-HU-BO-10-10	MI-O-HU-10	300	$20,418.00
MI-O-HU-BO-11-10	MI-O-HU-11	350	$24,164.00
MI-O-HU-BO-12-10	MI-O-HU-12	400	$28,197.00
MI-O-HU-BO-13-10	MI-O-HU-13	450	$32,885.00
MI-O-HU-BO-14-10	MI-O-HU-14	500	$37,650.00

MI-G-LID REPLACEMENT LIDS FOR MI-G GREASE INTERCEPTORS MI-G-LID

NOTE: Pedestrian rated only

MODEL NO.	US GPM	A IN	B IN	LIST PRICE EA.	NO. OF LIDS	NO. OF BOLTS
MI-G-0-LID	4	10.75	16.25	$1,353.00	1	1
MI-G-1-LID	7	13.25	17.75	$1,353.00	1	1
MI-G-2-LID	10	15.75	21.25	$1,486.00	1	1
MI-G-3-LID	15	15.75	23.75	$1,757.00	1	1
MI-G-4-LID	20	15.75	23.75	$1,757.00	1	1
MI-G-5-LID	25	18.75	27.75	$1,757.00	1	1
MI-G-6-LID	35	23.25	30.75	$2,704.00	1	4
MI-G-7-LID	50	23.25	30.75	$2,704.00	1	4

Suffix -AL, for replacement aluminum lids, Add - (MI-G-0-LID to MI-G-3-LID, **$1,781.00**), (MI-G-4-LID to MI-G-7-LID, **$2,495.00**)

To determine the List Price of a Bolt on extension size not listed, take the 6" bolt on price, divide by 6, then multiply by the number of inches of bolt on extension required. Round up fractions to the next number.

Design and dimensions are subject to modification. Prices do not include applicable taxes. Visit **www.mifab.com** for the most recent product information.
MIFAB®, Inc., 1321 West 119th Street, Chicago, Illinois 60643-5109, USA Toll Free: 1-800-465-2736 • Fax: 1-773-341-3049
All sales subject to MIFAB's® Terms & Warranties. Please refer to inside front cover. sales@mifab.com • Canada Toll Free: 1-800-387-3880

FIXTURE CARRIERS

Horizontal, adjustable fixture carrier. Elevates toilet off floor for easier cleaning.

MI-10 WATER CLOSET CARRIERS

HARDWARE PACKS
MIFAB closet carriers are shipped with two different hardware packs - one for the rough in and one for the finish trim. Big advantage vs. others that ship all of the hardware combined in one bag - easy to lose the finish trim at the end of the job when you need it.

NARROW LEGS
2 ¾" legs for narrow install. Outside top of leg removed for unobstructed access to anchor bolt in foot.

UNIVERSAL
Same faceplate used for both siphon jet and blow-out toilets.

SAVE TIME
Bolts connect legs to the faceplate from the front.

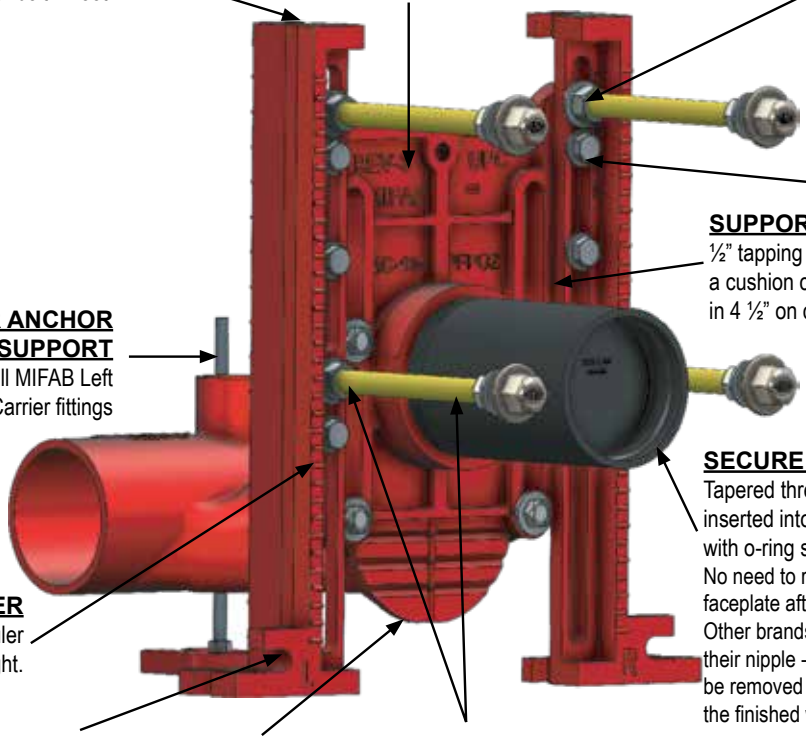

QUICK INSTALL
All bolts have a built-in washer design.

SUPPORT
½" tapping for support strut to accept a cushion clamp for flush valve rough in 4 ½" on center.

REAR ANCHOR SUPPORT
provided with all MIFAB Left and Right Carrier fittings

SECURE NIPPLE
Tapered thread nipple inserted into faceplate with o-ring secondary seal.
No need to remove the nipple from the faceplate after the water test to cut.
Other brands have a flare at the end of their nipple - requiring their nipples to be removed after the water test to cut to the finished wall.

BUILT-IN RULER
½" increment ruler to get correct height.

PRE-FAB ANCHOR SLOT
Slot is 1" from the bottom to connect to 1 ½" angle iron for pre-fab battery transport.

EASY TO USE
Faceplate has easy to break off tabs set at common heights.

ROD PROTECTORS
Rod protectors come preassembled to prevent mortar from affecting threads with backup nut already assembled onto rods.

Note: Consult with your MIFAB service representative to order the proper "right" and "left" products.

Check out the MC-10-27-37 long barrel carrier from MIFAB. It is standard at 37" long (to allow for the 1" thick partitions between the toilets and is also standard with the -27 auxiliary inlet connection to receive lavatory or urinal waste.

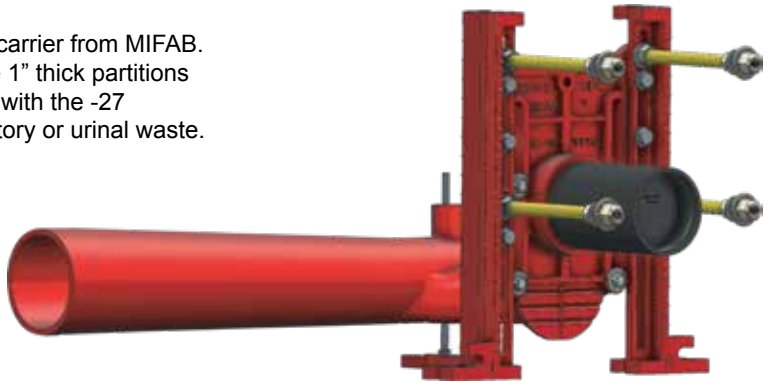

FIXTURE CARRIER SELECTION AND CONSIDERATION INFORMATION

APPLICATION	TYPES	RECOMMENDED CARRIER
Commercial construction Off the floor Water Closet	Horizontal or vertical Fixed or Adjustable	MC-10, MC-10-EXT, MC-12, MC-13 MC-14, MC-15.
Light commercial or residential Off the floor Water Closet	Fixed Vertical	MC-14-3, MC-21, MC-25
Off the floor lavatories (mounted on structural support legs constructed behind the finished wall) Wash Sinks, Surgical Scrub Sinks	Plate type Exposed Arm Concealed Arm Wheelchair	MC-30, MC-31, MC-32, MC-33 MC-40, MC-56, MC-41, MC-51, MC-53, MC-53, MC-54MC-42 MC-60
Off the Floor Urinals		MC-30
Off the Floor Drinking Fountains and Water Coolers		MC-30, MC-31, MC-33
Penal Fixtures	Stack mounted fixtures	MC-26, MC-27, MC-28

CLOSET CARRIER NIPPLE VARIATIONS

(STANDARD) TAPERED THREAD	ROLLED STRAIGHT THREAD (suffix -OR)	TAPERED THREAD TWO PIECE NIPPLE WITH ADJUSTABLE HORN (suffix -AH)
	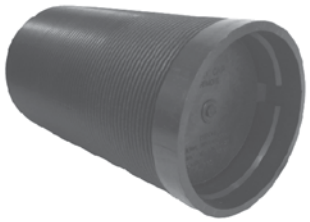	
MC-10-PN8-31 (12” also available)	**MC-10-PN8R-31** (12” also available)	**MC-10-PN8AH-31** (12” also available)

CONCEALED ARM CARRIERS

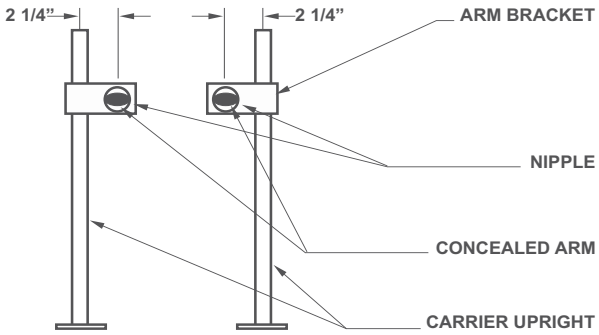

The center of the concealed arm nipple is 2 1/4” offset from center line of the uprights. It is imperative that this offset be accommodated when locating the position of the upright before it is lag bolted to the floor slab !

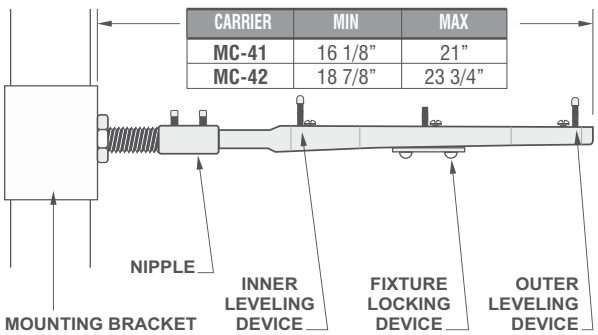

CARRIER	MIN	MAX
MC-41	16 1/8”	21”
MC-42	18 7/8”	23 3/4”

NOTE: Minimum and maximum dimensions are front of mounting bracket to the end of the concealed arm. The outermost leveler position is 3/4” from the end of the arm

Design and dimensions are subject to modification. Prices do not include applicable taxes. Visit **www.mifab.com** for the most recent product information.
MIFAB®, Inc., 1321 West 119th Street, Chicago, Illinois 60643-5109, USA Toll Free: 1-800-465-2736 • Fax: 1-773-341-3049
All sales subject to MIFAB’s® Terms & Warranties. Please refer to inside front cover. sales@mifab.com • Canada Toll Free: 1-800-387-3880

Fixture Carrier Selection Guide

ADVANTAGES OF OFF-THE-FLOOR PLUMBING FIXTURES

Off-the-floor plumbing fixtures are easily the most widely used plumbing fixture in commercial building today. As the name implies, no part of the fixture touches the floor of the installation. The fixture is mounted to steel studs protruding through the wall from a carrier support in the pipe chase. This carrier support is anchored to the chase floor and receives the fixture load. The advantages of off-the-floor fixtures, as opposed to floor mounted fixtures, are numerous. The most obvious advantages - installation, maintenance, sanitation and aesthetics - are presented here.

1. INSTALLATION

The installation of floor mounted fixtures can be costly and time-consuming to the job. Floor mounted fixtures require slab penetration and sleeving at each location. The resulting waste piping is run under the slab, thus creating a need in multi-story buildings to provide a false ceiling for concealment purposes. The piping assembly also requires special consideration as it is usually accomplished piece by piece during installation. By comparison, the off the floor fixture installation does not involve slab penetration in the toilet room. Since all piping is behind the wall, there is no need for ceiling modification. And off-the-floor support systems are fairly modular in design, allowing for prefabrication, on or off site, before installation. All this contributes to substantial savings in time and cost.

2. MAINTENANCE

Both floor mounted and off-the-floor plumbing installations may have similar mechanical service requirements. However, due to their inherent characteristics, the off-the-floor installations are generally considered easier to service and maintain.

3. SANITATION

The most important consideration of toilet room design is sanitation, the ability to maintain a clean environment. The floor mounted fixture installation directly opposes this consideration. The base of the fixture magnetically attracts dirt that is difficult, if not impossible, to remove. Floor deterioration in the area of fixture contact also contributes to unsanitary conditions. The clearance that the off-the-floor fixture installation provides immediately resolves the problems of floor mounted design. Complete sanitation is easily maintained with normal cleaning.

4. AESTHETICS

Aesthetic appeal is an important consideration in deciding upon fixtures. The clean, smooth lines of off-the-floor fixtures complement today's contemporary toilet room designs.

TYPES OF WATER CLOSETS

There are two types of water closets commonly used in commercial installations: siphon jet and blowout. The MIFAB closet carrier can be used to mount either type.

SIPHON JET WATER CLOSETS use siphonic flushing action to evacuate the bowl. This is a quiet and economical type of flushing action that provides quick, efficient results. The large water surface area of the bowl, for better sanitation, is another desirable feature of the siphon jet water closet. The siphon jet closet mounts to the carrier with four mounting studs.

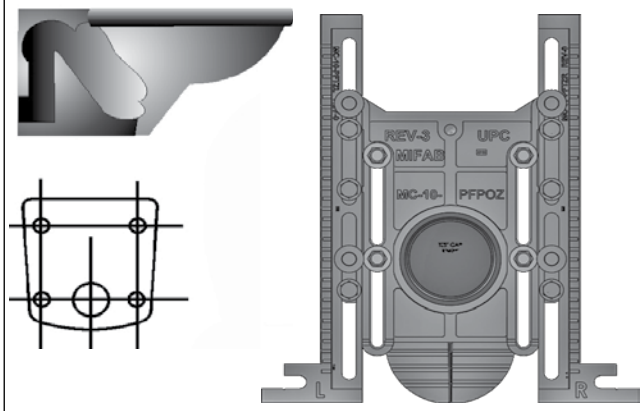

MC-10 (SIPHON JET WATER CLOSET)

BLOWOUT WATER CLOSETS use a direct jet stream for bowl evacuation. This type of flushing action is rapid and forceful and primarily used in heavy duty installations such as stadiums and terminals. Due to this powerful flushing, the blowout water closet is noisier in operation than the siphon jet. The blowout closet mounts to the wall with three mounting studs. **NOTE: It is highly unadvisable to mount Blow-out type water closets in a "Back to Back" type installation.**

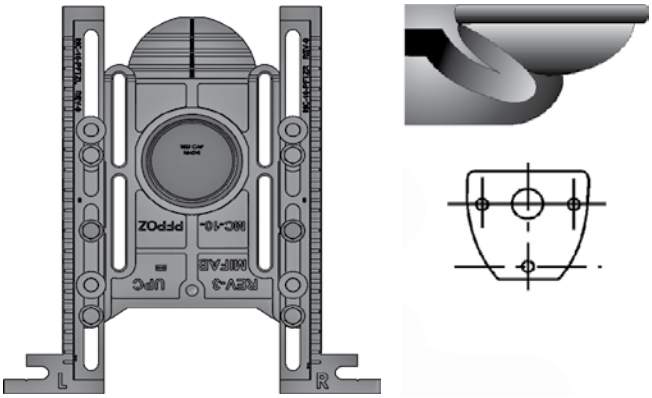

MC-10 (BLOWOUT WATER CLOSET)

FIXTURE CARRIERS

Fixture Carrier Suggested Specifications

FIXTURE CARRIERS
PLATE TYPE CARRIERS

The MIFAB plate type floor mounted fixture carriers have been developed to accommodate the majority of hanger plate supported fixtures such as urinals, plate type lavatories and water coolers for support independent of the wall. The MIFAB universal backing plate provides adjustment for a wide variety of fixtures from most manufacturers.

CONCEALED ARM CARRIERS

MIFAB concealed arm lavatory carriers can be used with any lavatory fixture that has been drilled for concealed arm supports. This concealed arm support consists of ductile iron arms with leveling and locking hardware. These arm assemblies are available in two lengths to accommodate standard and wheelchair fixtures. After carrier installation and completion of wall construction, final adjustment can be made to the arm and sleeve assembly. Then the fixture is slid over the arms. Level and locking are accomplished through openings in the fixture itself. Installation is then complete.

MC-32

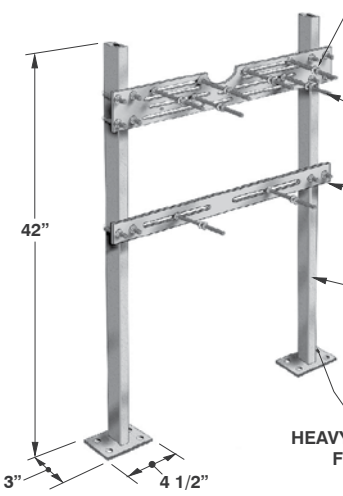

Carriers are provided with complete installation instructions for customer convenience.

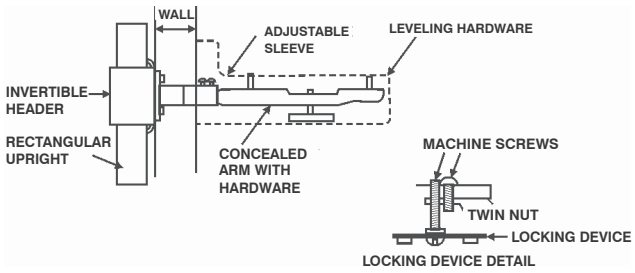

CONCEALED ARM INSTALLATION DETAIL

Auxiliary Support System

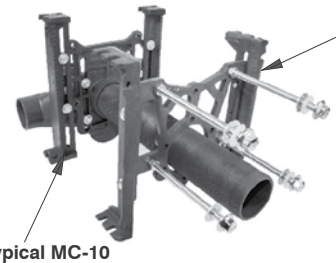

MC-41

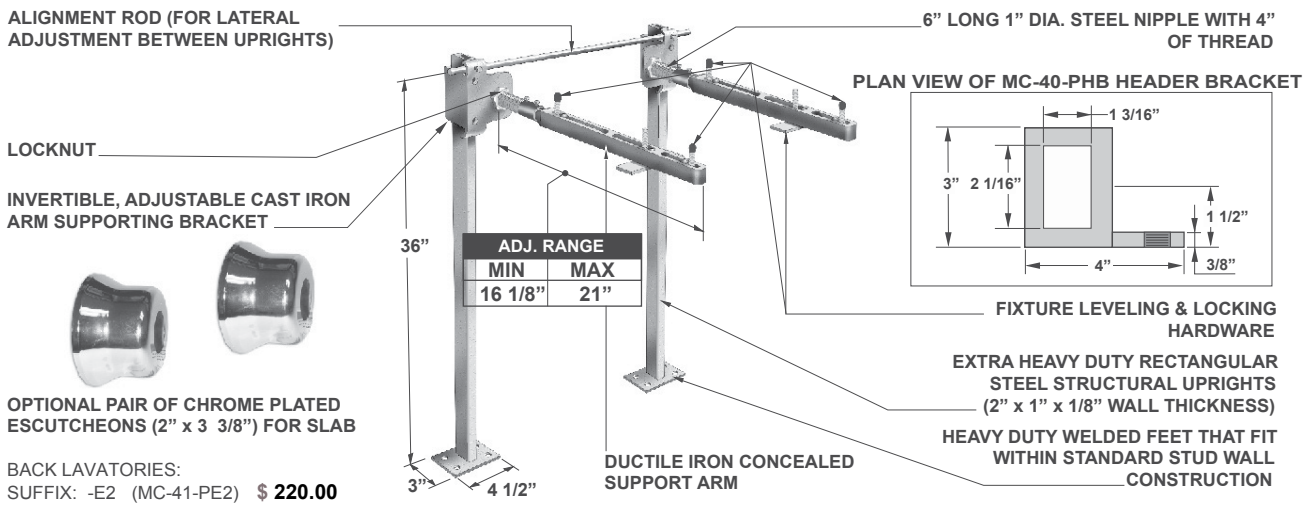

BACK LAVATORIES:
SUFFIX: -E2 (MC-41-PE2) $ **220.00**

FIXTURE CARRIERS

Design and dimensions are subject to modification. Prices do not include applicable taxes. Visit **www.mifab.com** for the most recent product information.
MIFAB®, Inc., 1321 West 119th Street, Chicago, Illinois 60643-5109, USA Toll Free: 1-800-465-2736 • Fax: 1-773-341-3049
All sales subject to MIFAB's® Terms & Warranties. Please refer to inside front cover. sales@mifab.com • Canada Toll Free: 1-800-387-3880

Fixture Carrier Suggested Specifications (Contd.)

WALL HUNG CLOSET CARRIERS
Wall Hung Water Closets shall be supported independently of the wall by MIFAB Series MC-1(*) carrier fittings with ductile iron adjustable foot supports. Where space permits, waste piping shall be run horizontally above the floor and MIFAB Series MC-10 single or double carrier fittings shall be used. Connection to the stack in a horizontal run shall be a TY or a MC-13 carrier fitting. Where pipe space is limited, or where single fixtures are installed use MIFAB MC-14 Series. Where fixtures are located on common waste/vent stacks use MIFAB Series MC-15 Series carrier fittings.
* Series number denotes horizontal, vertical adjustable or vertical fixed water closet carrier.

WALL HUNG URINALS
Wall hung urinals shall be supported independently of the wall by MIFAB Series MC-32 Series Urinal Carrier with two supporting plates, heavy-duty rectangular steel uprights with integral welded feet.

WALL HUNG LAVATORIES
Wall Hung Lavatories shall be supported independently of the wall by MIFAB Series MC -40 Series Lavatory Carrier with heavy duty rectangular steel uprights with integral welded feet. Wherever possible, fixtures shall be supplied with access for concealed arm supports and MIFAB Series MC-41 with cast ductile iron arms shall be used. Supply chrome plated escutcheons on slab type lavatories. Where fixtures are not available with access for concealed arms, fixtures shall be supported by MIFAB Series MC-31 or MC-32 for plate supported lavatories, or MC-40 for exposed arms.

WHEEL CHAIR LAVATORIES
Wheel chair lavatories shall be supported independently of the wall by MIFAB Series MC-42 Lavatory Carrier with extended cast ductile iron concealed arms and heavy duty rectangular steel uprights with integral welded feet.

MC-10L

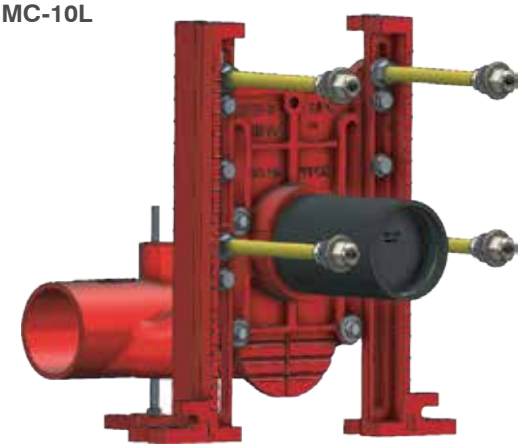

MC-32

MC-41 & MC-42 with cast ductile iron arms.

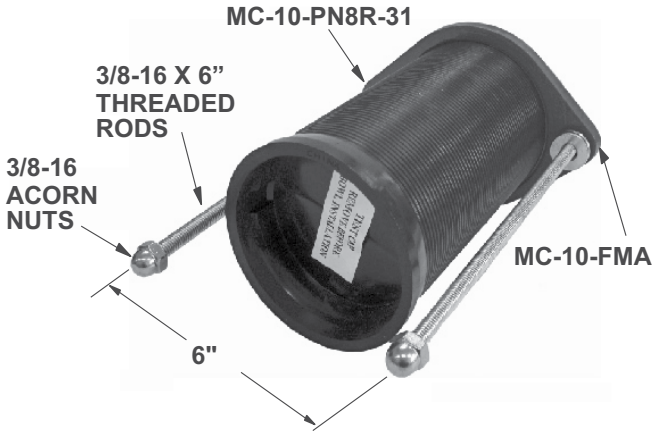

The -FM kit is used with floor mounted back

FIXTURE CARRIERS

TYPICAL CLOSET CARRIER LAYOUT

ANSI Standard A-112.19.2, Vitreous China Plumbing Fixtures, paragraph 5.1.3.3 states that a "Physically Handicapped" water closet is a siphon jet design that is positioned 18" from the finished floor to the top of the rim.

The closet carrier layout detailed below has the following common installation dimensions:
* Waste piping is pitched at 1/4” per foot
* Centerline of the regular water closet outlets to the finished floor is 5 1/4”
* Regular water closet rim to the finished floor is 15 1/4”
* Centerline of the physically handicapped water closet outlet to the finished floor is 8 1/4”
* Physically handicapped water closet rim to the finished floor is 18”

The regular water closets are supported by MIFAB's MC-10-27-37 long barrel carrier fittings that are produced with a 37” long barrel. This can save the installer time and material by not having to purchase and cut waste pipe to install between standard "short barrel" carrier fittings (MC-10 Series) that are 13" long.

Note that physically handicapped water closets can also be installed onto the MC-13, vertical, adjustable carrier by positioning the centerline of the 4" female threaded nipple connection in the faceplate 8-1/4" from the finished floor.

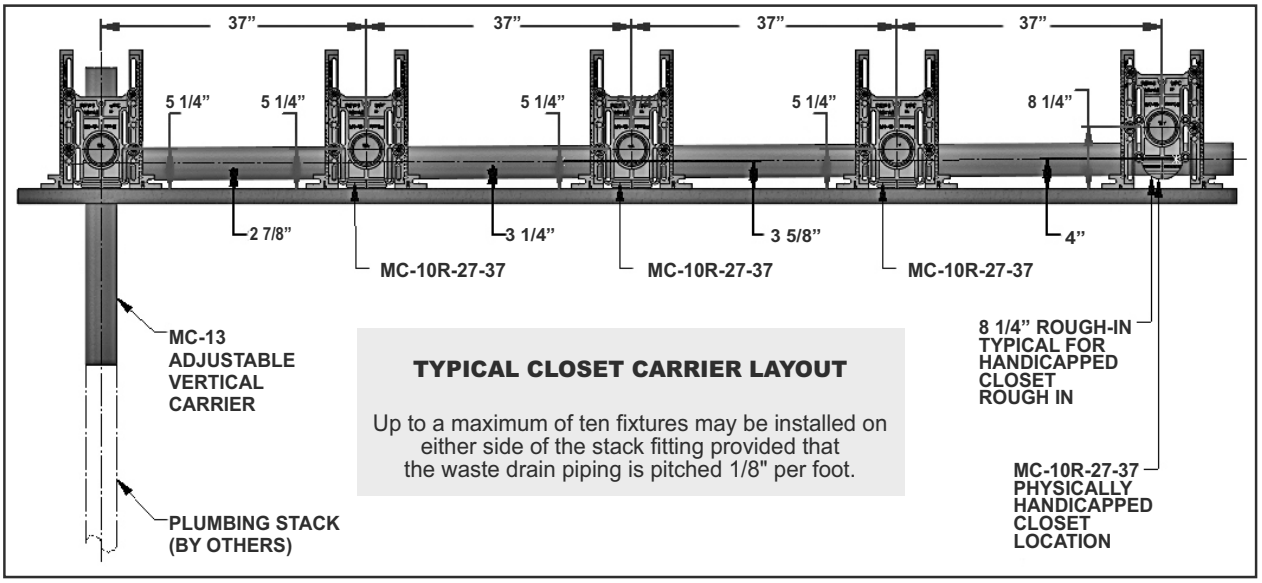

TYPICAL CLOSET CARRIER LAYOUT

Up to a maximum of ten fixtures may be installed on either side of the stack fitting provided that the waste drain piping is pitched 1/8" per foot.

ADJUSTMENT RANGE OF MIFAB'S MC-10 AND MC-13 SERIES CARRIER FITTINGS

Lowest fixture outlet and drain line position

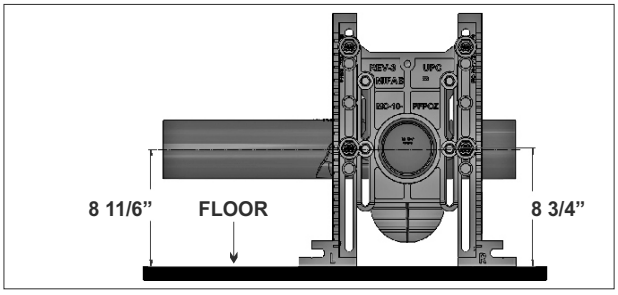

Highest fixture outlet and drain line position

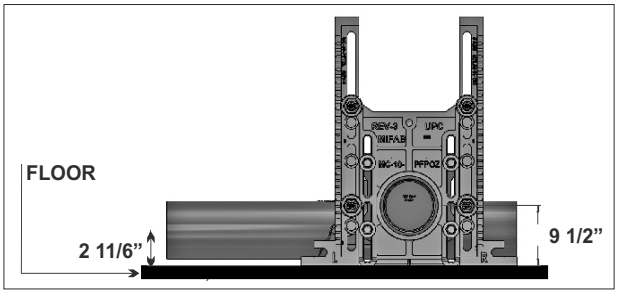

CENTER LINE OF FIXTURE OUTLET HEIGHT FROM FINISHED FLOOR	CENTER LINE OF DRAIN LINE POSITION FROM THE FINISHED FLOOR	
	MINIMUM	MAXIMUM
4 1/2”	4 1/2”	1/4”
4 3/4”	4 1/2”	1/2”
5”	4 3/4”	3/4”
5 1/2”	5 1/4”	1 1/4”
6”	5 3/4”	1 3/4”
6 1/2”	6 1/4”	2 1/4”
7”	6 3/4”	2 3/4”
7 1/2”	7 1/4”	3 1/4”
8”	7 3/4”	3 3/4”
8 1/4”	8”	4”
8 1/2”	8 1/4”	4 1/4”
8 3/4”	8 1/2”	4 1/2”
9”	8 3/4”	4 3/4”
9 1/2”	9 1/4”	5 1/4”

Note: For all rough-in heights, the closet carrier fitting has a 4" vertical adjustment range. This is to ensure that there is enough drainage pitch on long runs.

Design and dimensions are subject to modification. Prices do not include applicable taxes. Visit **www.mifab.com** for the most recent product information.
MIFAB®, Inc., 1321 West 119th Street, Chicago, Illinois 60643-5109, USA Toll Free: 1-800-465-2736 • Fax: 1-773-341-3049
All sales subject to MIFAB's® Terms & Warranties. Please refer to inside front cover. sales@mifab.com • Canada Toll Free: 1-800-387-3880

HORIZONTAL AND VERTICAL ADJUSTABLE / FIXED CLOSET CARRIER MINIMUM SPACE REQUIREMENTS

Dimensions shown are minimum assuming carrier face plate and foot are built in wall and minimum length shortened coupling is used.

Dimensions shown are minimum assuming carrier fitting, face plate foot and rear anchor foot are located in pipe chase.

HORIZONTAL ADJUSTABLE CARRIERS

IN WALL		IN PIPE CHASE	
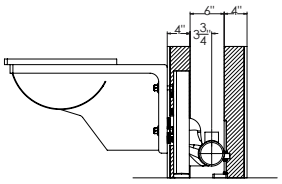	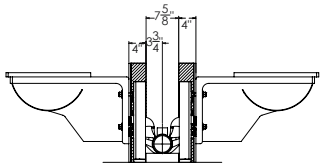	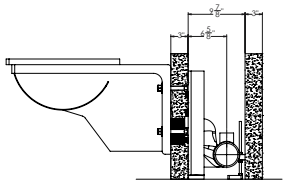	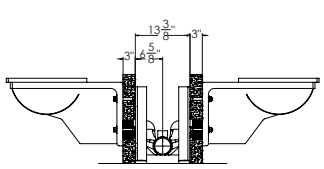
MC-10R/L	MC-10D	MC-10R/L	MC-10D

VERTICAL ADJUSTABLE CARRIERS

IN WALL		IN PIPE CHASE	
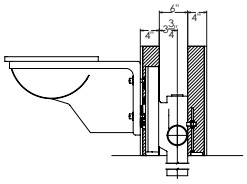	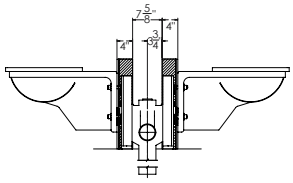	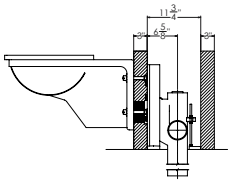	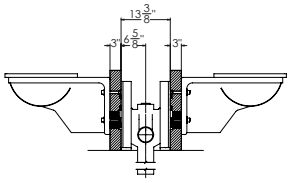
MC-12/MC-13	MC-12D/MC-13D	MC-12/MC-13	MC-12D/MC-13D

VERTICAL FIXED ON-STACK CARRIERS

IN WALL		IN PIPE CHASE	
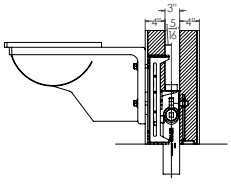	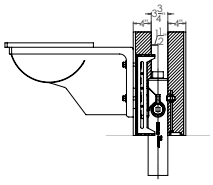	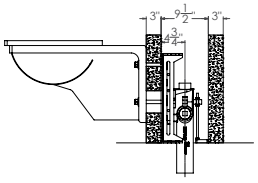	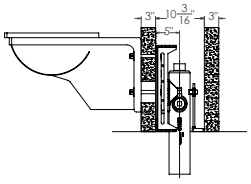
MC-14-3	MC-14-4	MC-14-3	MC-14-4

VERTICAL FIXED OFFSET CARRIERS

IN WALL		IN PIPE CHASE	
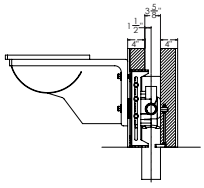	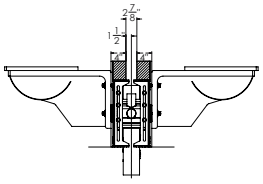	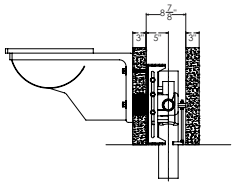	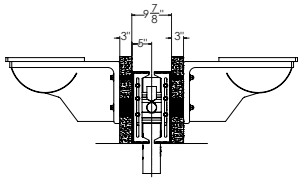
MC-15R_L	MC-15D	MC-15R_L	MC-15D

MIFAB®

SHIFT AND LIFT

OFFSET THE FIXTURE WITHOUT TEARING OUT THE WALL AND CARRIER!

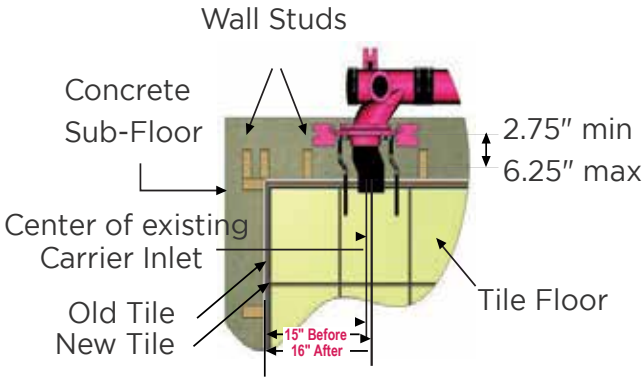

US PATENT #8,887,319

- 4″ F.I.P. x 3″ M.I.P. PVC adapter available (Part # MC-10-43-ADAPT) to thread into 3″ threaded faceplates

PARTS IN KIT

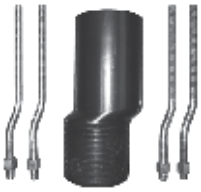

5/8″ hardware rods and 4″ ABS offset nipple

Available in three adjustments

- **½″ Adjustment**
  Part #: MC-10-PN8R-31-SL-50
- **¾″ Adjustment**
  Part #: MC-10-PN8R-31-SL-75
- **1″ Adjustment**
  Part #: MC-10-PN8R-31-SL-100

Save frustration and expense! Shift and Lift is the solution when the ADA water closet is not between 15″and 16″ from the center of the finished wall

The MC-10 Series is tested with the Shift and Lift offset hardware package to support a 500 lb. load with the rear anchor support.

ANGLE VIEW

TOP VIEW

WWW.MIFAB.COM

LIT-053

Design and dimensions are subject to modification. Prices do not include applicable taxes. Visit **www.mifab.com** for the most recent product information.
MIFAB®, Inc., 1321 West 119th Street, Chicago, Illinois 60643-5109, USA
Toll Free: 1-800-465-2736 • Fax: 1-773-341-3049
All sales subject to MIFAB's® Terms & Warranties. Please refer to inside front cover.
sales@mifab.com • Canada Toll Free: 1-800-387-3880

MC-41 UNIVERSAL LAVATORY CARRIER

Single Carrier with Concealed Arms. Floor mounted concealed arm lavatory carrier with lacquered, adjustable, ductile iron concealed support arms.

UNIVERSAL LAV. CARRIER

- No need to ask which lavatory is being used.
- Only one set of universal arms to fit all but long ADA lavs.
- Tapping in Header bracket is offset from the upright so that the nipple can thread into the open space.
- Header bracket is reversible and can be offset for second adjustment.
- Arm can be adjusted ino the nipple.

ADDITIONAL FEATURES

- Other manufacturers require different arms for different sink sizes.
- Hardware always assembled onto arms with bag around each arm to prevent loose hardware.

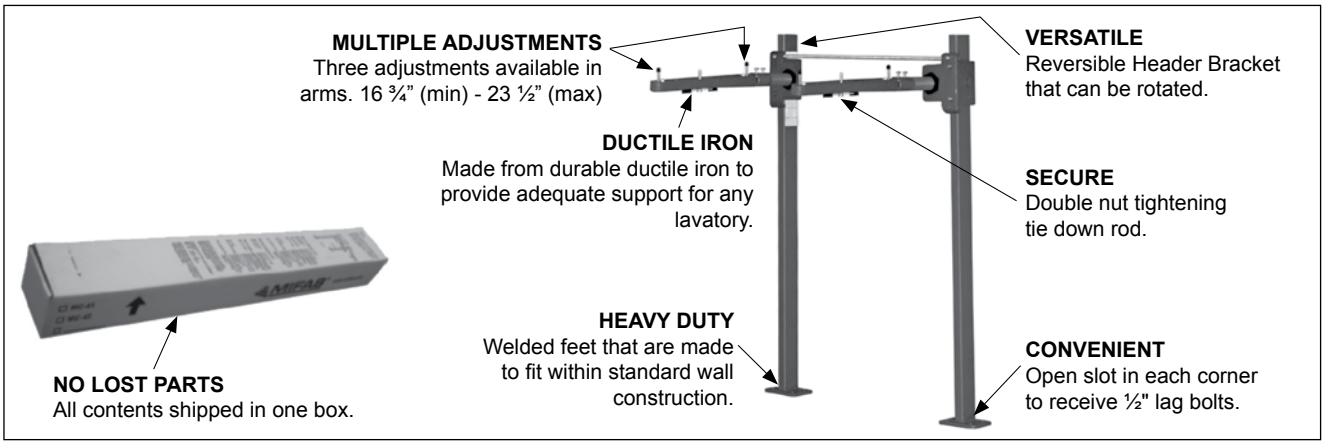

MC-10-CO WATER CLOSET CARRIER CLEANOUT ASSEMBLY

List Price: $ 827.00
(Carrier not included)

Save time and money by installing the MIFAB MC-10-CO water closet carrier cleanout assembly. This eliminates the need to source and assemble several additional parts. Five no hub couplings are reduced to two. The 4" threaded brass cleanout plug is built into the top fitting instead of having to order a separate part. The stainless steel wall plate is included with screw.
The MC-10-CO ships complete in a box with the following components: 1) 2 pieces of the MI-QXHUB-4 Quick Hub couplings, 1 quarter bend fitting for the bottom, 1 top fitting with integral 4" brass threaded cleanout plug, 1 support bracket for assembly and one 6" round stainless steel wall plate with screw to assemble onto the finished wall.

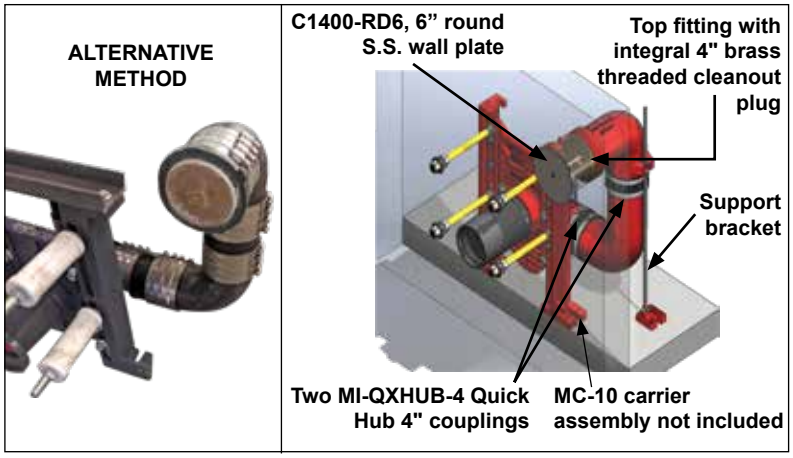

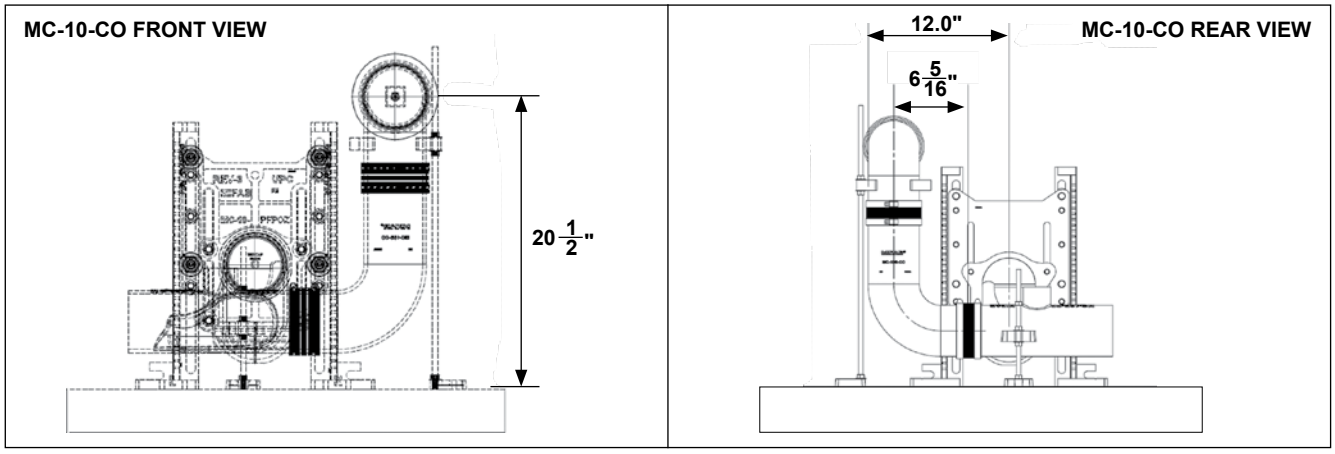

MIFAB WATER CLOSET FEATURES AND BENEFITS

FEATURES	BENEFITS
Most compact full featured carrier available.	Legs and face plate always factory assembled to save assembly labor. Legs are 18 inches high for ADA closet rough-in. Legs are invertible - no rights or lefts - same for both. Legs have 2 slots for anchor bolts in case of obstacle in floor (i.e. rebar) - only one bolt required.
Trim and fitting boxed separately.	Ease of handling and storage.
Bolts for closet height adjustment are located on front faceplate.	Easy access to allow for adjustment on water closet/fitting height. Labor savings by using an air gun with a battery of carriers. Stud obstruction eliminated with bolts on front of faceplate saving labor and time.
Two ½ inch tappings on back of faceplate.	Allows strut to be bolted flush to back of faceplate and notches in legs. Use of cushion clamp in strut allows for 4¾" inch rough-in from centre of cushion clamp to centre of nipple, allows for flush valve water supply rough-in. Anchor strut provides support for any additional rough-in. Strut has multifunctional use. Holdrite® bracket fastens over hardware rods that support the water closets - can be used for 4¾" inch flush valve water supply rough-in.
Breakaway tabs on faceplate.	For fitting height adjustment. Very common dimensions to center of water closet bowl when breaking off each tab. Rough-in height adjustment: Bottom of face plate to centre = 7 inch centre 1st cut = 4½" cut inch centre 2nd cut = 5 ¼" inch centre
Faceplate has additional 5/8 inch tapping.	The same faceplate to be inverted for blowout water closet installation.
Faceplate with O-ring.	Can receive any of 3 different nipple designs: - rolling threaded nipple - tapered nipple with running threaded horn adjustment - standard tapered threaded nipple
Feet are 2¾" inches deep	Allow carrier legs to fit in smaller stud channel.
Narrow pipe chase installation.	9½" inches from front of legs to back of the fitting, plus 1 inch for rear anchor support. 6½" inches from back of legs to the back of fitting, plus 1 inch for rear anchor support.
37 inch long barrel - MC-10-27-37	Minimal up charge. Savings on cost of pipe, cutting pipe and no hub bands versus the competition. Always supplied with 2 inch waste connection auxiliary inlet to receive lavatory and/or urinal waste. Eliminates the need for a "Y" and/or "T" fitting if a lavatory and/or urinal are required.
3/4" wide bolt slots for long barrel fitting	Provides necessary adjustment to achieve required slope.
Threaded rods protective casing.	Protects threads during installation
Closet support rods have double tightening nut.	One for siphon jet – 4 studs. Second for blowout toilet – 3 studs (by turning faceplate upside down). Ensures steadfast connection.
1 inch leg notches from ground	Grip a 1½" inch angle iron to transport a battery of carriers to the job site.
½ inch increments on legs/faceplate.	Visual reference for toilet height adjustment.
All tapped holes are greased.	For ease of installation for threaded rods.
Bowl saver washer	Allows closet bowl to fit closer to the finished wall. Reduces bowl breakage.
Fits flush with finished wall	This allows for less caulking and less chance to chip, damage or break toilet bowl.
Plastic washer prevents toilet bowl from hitting on steel nut.	Eliminates the need to cut a larger hole in finished wall and or ceramic tile to install 5/8" nut on threaded rod. This saves labor and repairs to finished wall. Saves money.

Design and dimensions are subject to modification. Prices do not include applicable taxes. Visit **www.mifab.com** for the most recent product information.
MIFAB®, Inc., 1321 West 119th Street, Chicago, Illinois 60643-5109, USA
Toll Free: 1-800-465-2736 • Fax: 1-773-341-3049
sales@mifab.com • Canada Toll Free: 1-800-387-3880
All sales subject to MIFAB's® Terms & Warranties. Please refer to inside front cover.

DETERMINING LEFT AND RIGHT HAND HORIZONTAL CARRIER SYSTEM

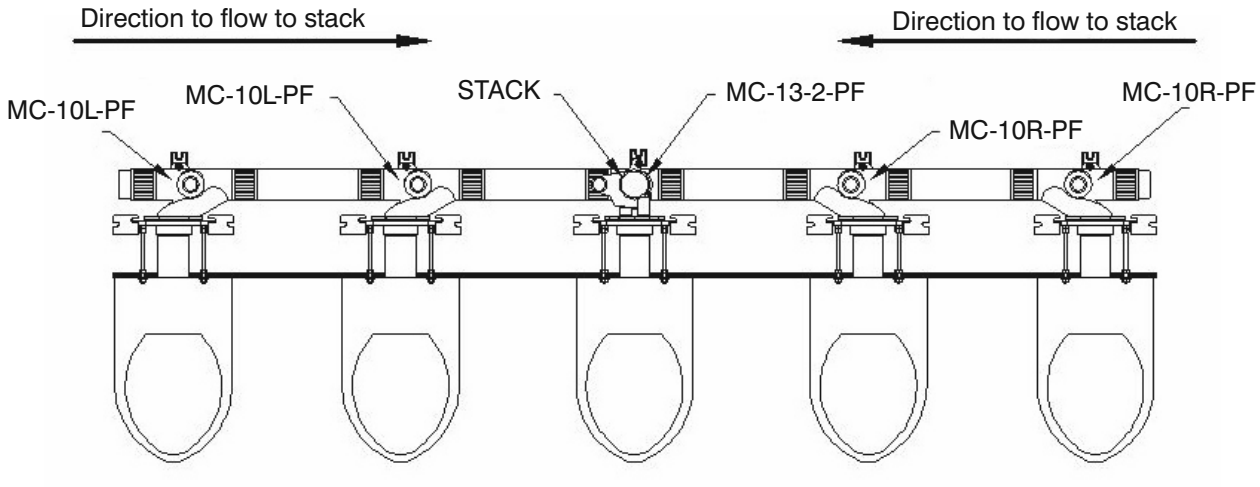

From the left = Left handed carriers

From the right = Right handed carriers

From the perspective of facing the vertical stack, if the toilets are to the left of you, a left handed carrier is required. If the toilets are to the right of you, a right handed carrier is required.

DETERMINING LEFT AND RIGHT HAND VERTICAL CARRIER SYSTEM

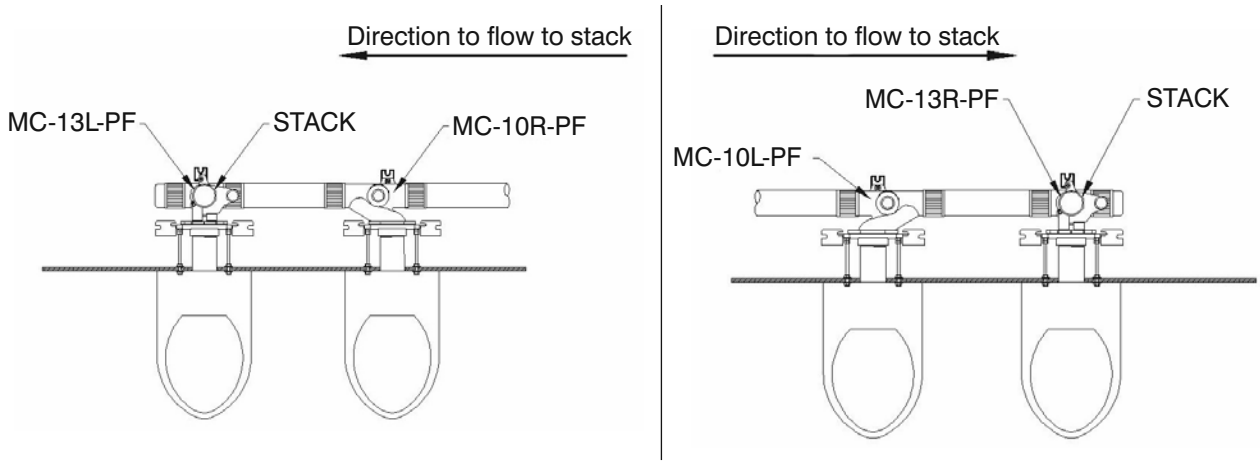

From the perspective of facing the vertical stack, if the open inlet is to the left of you, you have a left handed carrier. If the open inlet is to the right of you, you have a right handed carrier.

MC-10-3NH HORIZONTAL ADJUSTABLE WATER CLOSET CARRIER WITH 3" FITTING (FOR SIPHON JET AND BLOWOUT TOILETS) MC-10-3NH

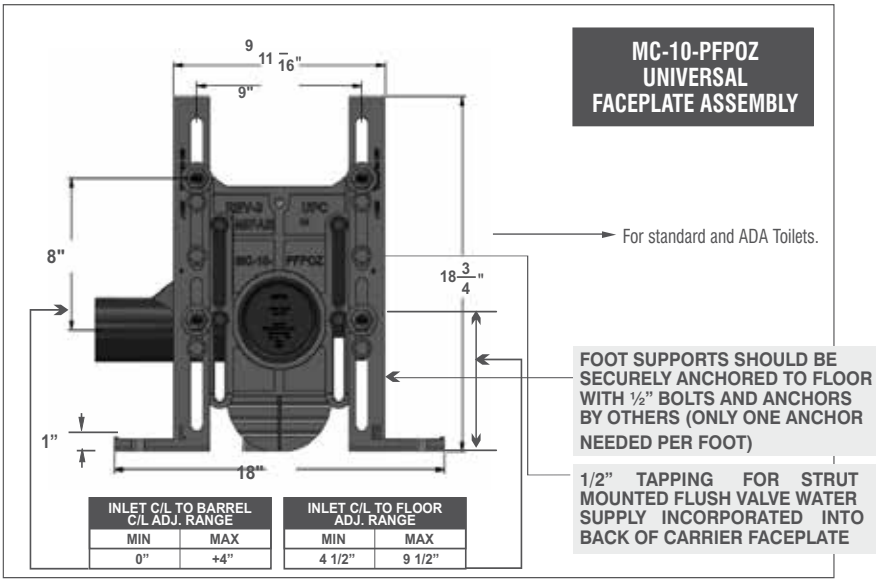

INLET C/L TO BARREL C/L ADJ. RANGE	
MIN	MAX
0"	+4"

INLET C/L TO FLOOR ADJ. RANGE	
MIN	MAX
4 1/2"	9 1/2"

MC-10D

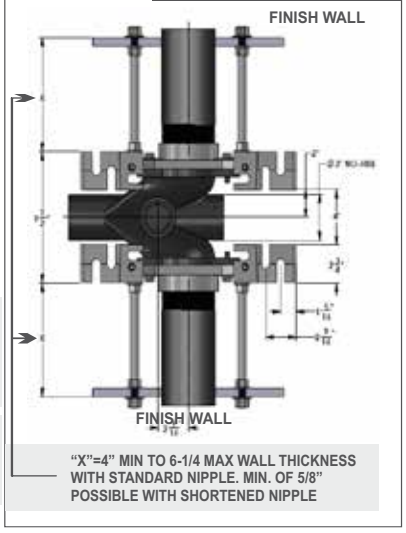

*MC-10 is tested to support a 500 lb. load with the rear anchor support.

BREAKAWAY TABS
CENTERLINE OF NIPPLE TO FLOOR

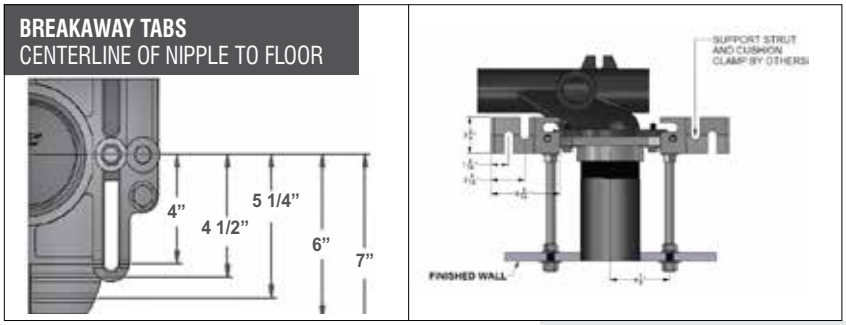

Note: 8" tapered thread ABS nipple shipped standard with MC-13 Series carriers. The universal faceplate assembly accepts all nipple variations, rolling thread (-OR), cast iron (-CI) and tapered thread ABS with adjustable horn (-AH). (See page 224)

"X"=4" MIN TO 6-1/4 MAX WITH SHORTENED NIPPLE NIPPLE. MIN. OF 5/8" POSSIBLE WALL THICKNESS WITH STANDARD

MC-10R

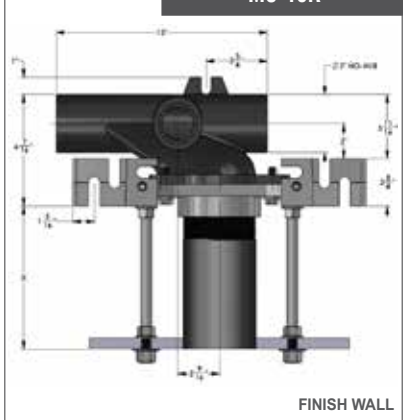

"X"=4" MIN TO 6-1/4 MAX WALL THICKNESS WITH STANDARD NIPPLE. MIN OF 5/8" POSSIBLE WITH SHORTENED NIPPLE

Note: right hand versions illustrated, left hand are mirror image

Note: Rear anchor support is included with every single carrier.

MC-10-3NH			
MODEL NO.	DESCRIPTION	WEIGHT (Lbs.)	LIST PRICE
MC-10L-3NH	Single left hand	66.00	$ **1885.00**
MC-10R-3NH	Single right hand	66.00	$ **1885.00**
MC-10D-3NH	Double - back to back	117.00	$ **3475.00**

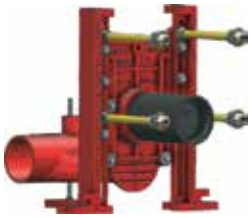

MC-10-3NH OPTIONAL VARIATIONS:

SUFFIX	DESCRIPTION	LIST PRICE SINGLE	LIST PRICE DOUBLE
-01	Neoprene bowl gasket (MC-10-PBG)	$ **81.00**	$ **162.00**
-1	Finishing / Tiling Frame (MC-10-1-PTFK)	$ **112.00**	$ **224.00**
-3	Rear anchor support (MC-10-3-PRSFK)	**Standard**	**N/A**
-10	Auxiliary support, recommended with nipple lengths over 12"(MC-10-AFS)	$**1121.00**	$**2242.00**
-12	12" tapered thread ABS nipple* (MC-10-PN12-31)	**No Add**	**No Add**
-13	All galvanized	$**1064.00**	$**2128.00**
-14	Vandal proof finish trim (MC-10-PFH-14)	$ **182.00**	$ **364.00**
-17	Test plug for custom cast iron nipples	$ **80.00**	$ **160.00**
-19	Nipple wrench (MC-10-PCW)	$ **142.00**	$ **142.00**
-20	Flush valve support (MC-10-FVS)	$ **119.00**	$ **238.00**
-22	Less fitting	$ **943.00**	$**1591.00**

SUFFIX	DESCRIPTION	LIST PRICE SINGLE	LIST PRICE DOUBLE
-AH8	8" ABS nipple with adjustable horn (MC-10-PN8AH-31)	**No Add**	**No Add**
-AH12*	12" ABS nipple with adjustable horn* (MC-10-PN12AH-31)	**No Add**	**No Add**
-CI-4	4" rolling thread cast iron nipple (MC-10-PN4R-50)	**No Add**	**No Add**
-CI-6	6" rolling thread cast iron nipple (MC-10-PN6R-50)	**No Add**	**No Add**
-CI-8	8" rolling thread cast iron nipple (MC-10-PN8R-50)	**No Add**	**No Add**
-CI-12*	12" rolling thread cast iron nipple* (MC-10-PN12R-50)	$ **137.00**	$ **274.00**
-CI-24	24" rolling thread cast iron nipple (MC-10-PN24R-50)	$ **395.00**	$ **790.00**
-FM	Floor mount back outlet fixture support	**No Add**	**No Add**
-HD-750	750 lb. rated heavy duty	$ **2378.00**	$ **4057.00**
-HDX	1,000 Lb. rated extra heavy duty	$ **4148.00**	$ **8161.00**
-OR8	8" rolling thread ABS nipple (MC-10-PN8R-31)	**No Add**	**No Add**
-OR12*	12" rolling thread ABS nipple (MC-10-PN12R-31)	**No Add**	**No Add**
-PFAB	Prefabricated carriers	**No Add**	**No Add**

*** H-1167-KA-14 (** Threaded rods for 12" nipples 5/8" x 14") **$64.00 $128.00**

Design and dimensions are subject to modification. Prices do not include applicable taxes. Visit **www.mifab.com** for the most recent product information.
MIFAB®, Inc., 1321 West 119th Street, Chicago, Illinois 60643-5109, USA Toll Free: 1-800-465-2736 • Fax: 1-773-341-3049
All sales subject to MIFAB's® Terms & Warranties. Please refer to inside front cover. sales@mifab.com • Canada Toll Free: 1-800-387-3880

MC-10 HORIZONTAL ADJUSTABLE WATER CLOSET CARRIER (FOR SIPHON JET AND BLOWOUT TOILETS)

MC-10

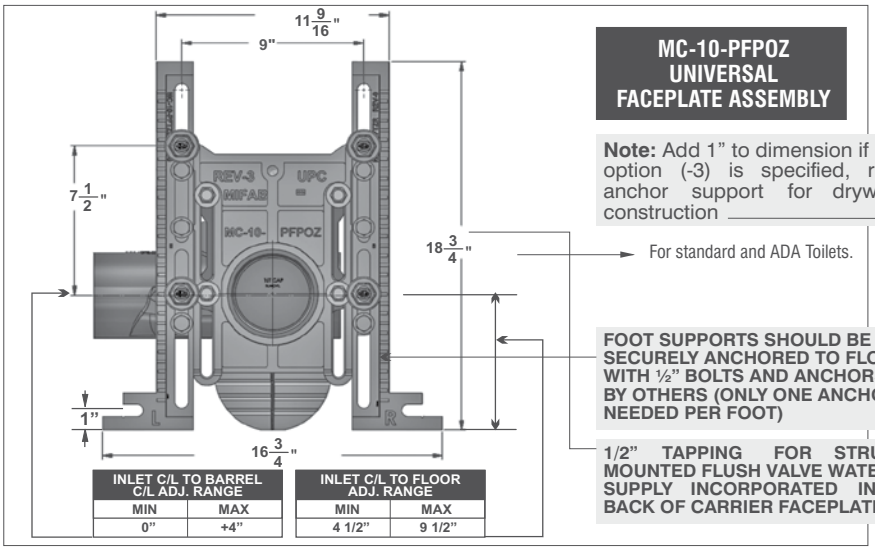

INLET C/L TO BARREL C/L ADJ. RANGE	
MIN	MAX
0"	+4"

INLET C/L TO FLOOR ADJ. RANGE	
MIN	MAX
4 1/2"	9 1/2"

MC-10-PFPOZ UNIVERSAL FACEPLATE ASSEMBLY

Note: Add 1" to dimension if option (-3) is specified, rear anchor support for drywall construction

For standard and ADA Toilets.

FOOT SUPPORTS SHOULD BE SECURELY ANCHORED TO FLOOR WITH ½" BOLTS AND ANCHORS BY OTHERS (ONLY ONE ANCHOR NEEDED PER FOOT)

1/2" TAPPING FOR STRUT MOUNTED FLUSH VALVE WATER SUPPLY INCORPORATED INTO BACK OF CARRIER FACEPLATE

*MC-10 is tested to support a 500 lb. load with the rear anchor support.

MC-10R

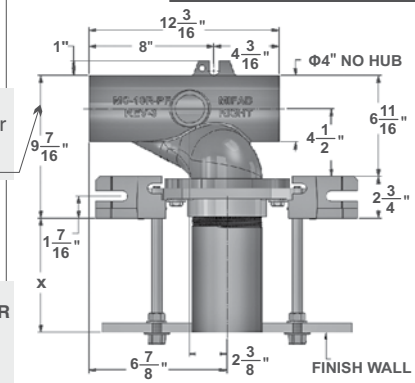

"X"=4" MIN TO 6-1/4 MAX WALL THICKNESS WITH STANDARD NIPPLE. MIN OF 5/8" POSSIBLE WITH SHORTENED NIPPLE

Note: right hand versions illustrated, left hand are mirror image

Note: Rear anchor support is included with every single carrier.

BREAKAWAY TABS
CENTERLINE OF NIPPLE TO FLOOR

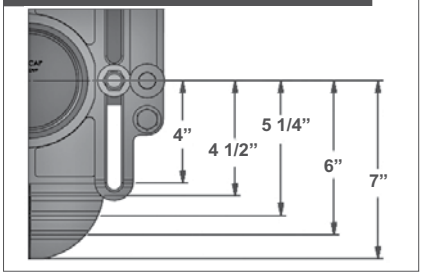

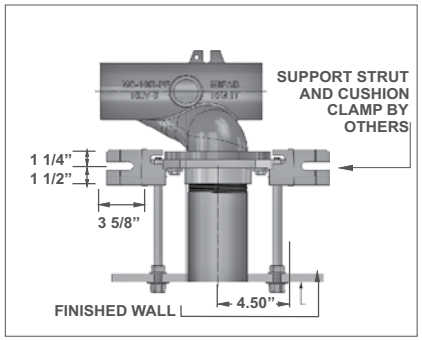

Note: 8" tapered thread ABS nipple shipped standard with MC-10 Series carriers. The universal faceplate assembly accepts all nipple variations, rolling thread (-OR), cast iron (-CI) and tapered thread ABS with adjustable horn (-AH). (See page 224)

"X"=4" MIN TO 6-1/4 MAX WALL THICKNESS WITH STANDARD NIPPLE. MIN. OF 5/8" POSSIBLE WITH SHORTENED NIPPLE

MC-10D

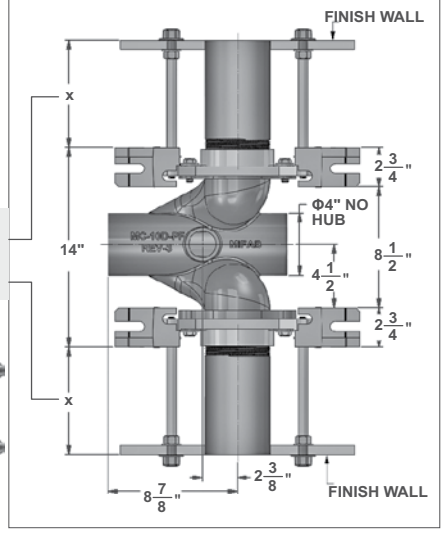

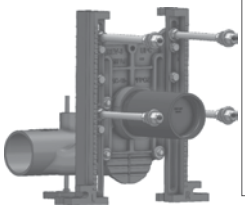

MC-10			
MODEL NO.	DESCRIPTION	WEIGHT (Lbs.)	LIST PRICE
MC-10L	Single left hand	66.00	$ 1885.00
MC-10R	Single right hand	66.00	$ 1885.00
MC-10D	Double - back to back	117.00	$ 3475.00

MC-10 OPTIONAL VARIATIONS:

SUFFIX	DESCRIPTION	LIST PRICE SINGLE	LIST PRICE DOUBLE
-01	Neoprene bowl gasket (MC-10-PBG)	$ 81.00	$ 162.00
-1	Finishing / Tiling Frame (MC-10-1-PTFK)	$ 112.00	$ 224.00
-3	Rear anchor support (MC-10-3-PRSFK)	Standard	N/A
-10	Auxiliary support, recommended with nipple lengths over 12"(MC-10-AFS)	$ 1121.00	$ 2242.00
-12	12" tapered thread ABS nipple* (MC-10-PN12-31)	No Add	No Add
-13	All galvanized	$ 1064.00	$ 2128.00
-14	Vandal proof finish trim (MC-10-PFH-14)	$ 182.00	$ 364.00
-17	Test plug for custom cast iron nipples	$ 80.00	$ 160.00
-19	Nipple wrench (MC-10-PCW)	$ 142.00	$ 142.00
-20	Flush valve support (MC-10-FVS)	$ 119.00	$ 238.00
-22	Less fitting	$ 943.00	$ 1591.00

SUFFIX	DESCRIPTION	LIST PRICE SINGLE	LIST PRICE DOUBLE
-AH8	8" ABS nipple with adjustable horn (MC-10-PN8AH-31)	No Add	No Add
-AH12*	12" ABS nipple with adjustable horn* (MC-10-PN12AH-31)	No Add	No Add
-CI-4	4" rolling thread cast iron nipple (MC-10-PN4R-50)	No Add	No Add
-CI-6	6" rolling thread cast iron nipple (MC-10-PN6R-50)	No Add	No Add
-CI-8	8" rolling thread cast iron nipple (MC-10-PN8R-50)	No Add	No Add
-CI-12*	12" rolling thread cast iron nipple* (MC-10-PN12R-50)	$ 137.00	$ 274.00
-CI-24	24" rolling thread cast iron nipple (MC-10-PN24R-50)	$ 395.00	$ 790.00
-FM	Floor mount back outlet fixture support	No Add	No Add
-HD-750	750 lb. rated heavy duty	$ 2378.00	$ 4057.00
-HDX	1,000 Lb. rated extra heavy duty	$ 4148.00	$ 8161.00
-OR8	8" rolling thread ABS nipple (MC-10-PN8R-31)	No Add	No Add
-OR12*	12" rolling thread ABS nipple (MC-10-PN12R-31)	No Add	No Add
-PFAB	Prefabricated carriers	No Add	No Add

*** H-1167-KA-14 (** Threaded rods for 12" nipples 5/8" x 14") **$64.00 $128.00**

MC-10-EXT HORIZONTAL ADJUSTABLE WATER CLOSET CARRIER FOR ADA HEIGHT WATER CLOSETS IN MIDDLE OF BATTERY (FOR SIPHON JET AND BLOWOUT TOILETS) MC-10-EXT

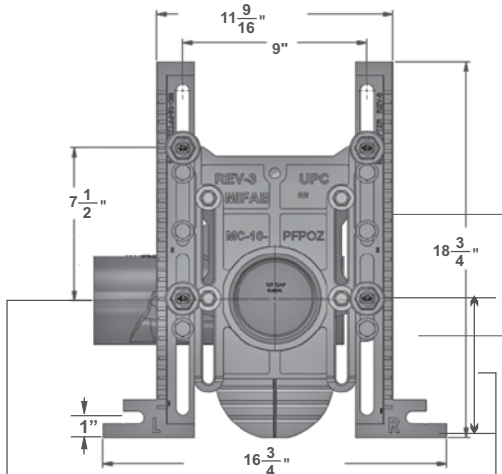

INLET C/L TO BARREL C/L ADJ. RANGE	
MIN	MAX
2 1/4"	6 1/4"

INLET C/L TO FLOOR ADJ. RANGE	
MIN	MAX
6 1/2"	9 1/2"

MC-10-PFPOZ UNIVERSAL FACEPLATE ASSEMBLY

For standard and ADA toilets

Note: Add 1" to dimension if option (-3) is specified, rear anchor support for drywall construction

FOOT SUPPORTS SHOULD BE SECURELY ANCHORED TO FLOOR WITH ½" BOLTS AND ANCHORS BY OTHERS (ONLY ONE ANCHOR NEEDED PER FOOT)

1/2" TAPPING FOR STRUT MOUNTED FLUSH VALVE WATER SUPPLY INCORPORATED INTO BACK OF CARRIER FACEPLATE

Note: 8" tapered thread ABS nipple shipped standard with MC-10 Series carriers. The universal faceplate assembly accepts all nipple variations, rolling thread (-OR), cast iron (-CI) and tapered thread ABS with adjustable horn (-AH). (See page 224).

*MC-10-EXT is tested to support a 500 lb. load with the rear anchor support.

MC-10R-EXT

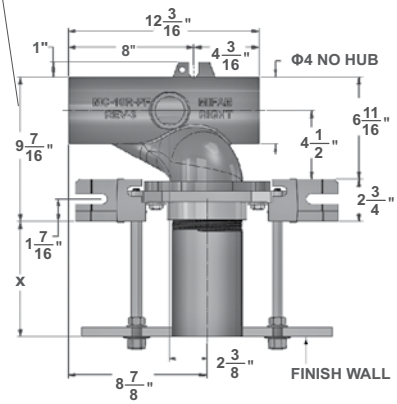

"X"=4" MIN TO 6-1/4 MAX WALL THICKNESS WITH STANDARD NIPPLE. MIN OF 5/8" POSSIBLE WITH SHORTENED NIPPLE

Note: right hand versions illustrated, left hand are mirror image

Note: Rear anchor support is included with every single carrier.

BREAKAWAY TABS
CENTERLINE OF NIPPLE TO FLOOR

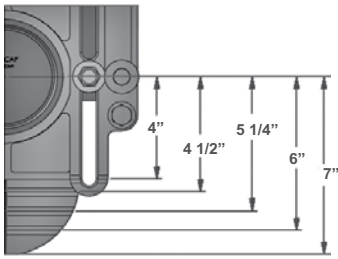

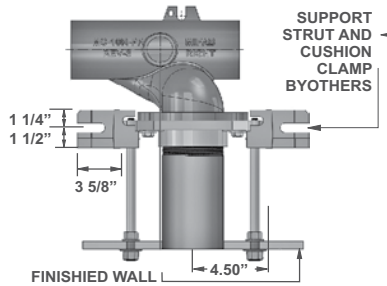

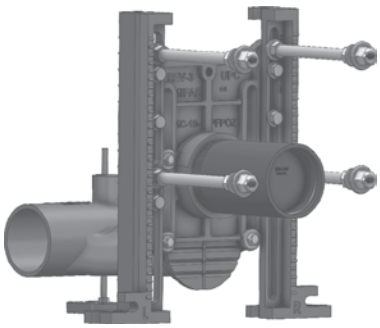

MC-10-EXT			
MODEL NO.	DESCRIPTION	WEIGHT (Lbs.)	LIST PRICE
MC-10L-EXT	Single left hand	66.00	$ 2062.00
MC-10R-EXT	Single right hand	66.00	$ 2062.00
MC-10D-EXT	Double - back to back	117.00	$ 3858.00
-HS	Hub and Spigot connection (single)		$ 235.00
	Hub and Spigot connection (double)		$ 490.00

MC-10-EXT OPTIONAL VARIATIONS:

SUFFIX	DESCRIPTION	LIST PRICE SINGLE	LIST PRICE DOUBLE
-01	Neoprene bowl gasket (MC-10-PBG)	$ 81.00	$ 162.00
-1	Finishing / Tiling Frame (MC-10-1-PTFK)	$ 112.00	$ 224.00
-3	Rear anchor support (MC-10-3-PRSFK)	Standard	N/A
-10	Auxiliary support, recommended with nipple lengths over 12"(MC-10-AFS)	$ 1121.00	$ 2242.00
-12	12" tapered thread ABS nipple* (MC-10-PN12-31)	No Add	No Add
-13	All galvanized	$ 1064.00	$ 2128.00
-14	Vandal proof finish trim (MC-10-PFH-14)	$ 182.00	$ 364.00
-17	Test plug for custom cast iron nipples	$ 80.00	$ 160.00
-19	Nipple wrench (MC-10-PCW)	$ 142.00	$ 142.00
-20	Flush valve support (MC-10-FVS)	$ 119.00	$ 238.00
-22	Less fitting	$ 1120.00	$ 1974.00

SUFFIX	DESCRIPTION	LIST PRICE SINGLE	LIST PRICE DOUBLE
-AH8	8" ABS nipple with adjustable horn (MC-10-PN8AH-31)	No Add	No Add
-AH12*	12" ABS nipple with adjustable horn* (MC-10-PN12AH-31)	No Add	No Add
-CI-4	4" rolling thread cast iron nipple (MC-10-PN4R-50)	No Add	No Add
-CI-6	6" rolling thread cast iron nipple (MC-10-PN6R-50)	No Add	No Add
-CI-8	8" rolling thread cast iron nipple (MC-10-PN8R-50)	No Add	No Add
-CI-12*	12" rolling thread cast iron nipple* (MC-10-PN12R-50)	$ 137.00	$ 274.00
-CI-24	24" rolling thread cast iron nipple (MC-10-PN24R-50)	$ 395.00	$ 790.00
-FM	Floor mount back outlet fixture support	No Add	No Add
-HD-750	750 lb. rated heavy duty	$ 2378.00	$ 4057.00
-HDX	1,000 Lb. rated extra heavy duty	$ 4148.00	$ 8161.00
-OR8	8" rolling thread ABS nipple (MC-10-PN8R-31)	No Add	No Add
-OR12*	12" rolling thread ABS nipple (MC-10-PN12R-31)	No Add	No Add
-PFAB	Prefabricated carriers	No Add	No Add

*** H-1167-KA-14 (** Threaded rods for 12" nipples 5/8" x 14") **$64.00 $128.00**

Design and dimensions are subject to modification. Prices do not include applicable taxes. Visit **www.mifab.com** for the most recent product information.
MIFAB®, Inc., 1321 West 119th Street, Chicago, Illinois 60643-5109, USA Toll Free: 1-800-465-2736 • Fax: 1-773-341-3049
All sales subject to MIFAB's® Terms & Warranties. Please refer to inside front cover. sales@mifab.com • Canada Toll Free: 1-800-387-3880

MC-10-HS HORIZONTAL ADJUSTABLE HUB AND SPIGOT WATER CLOSET CARRIER (FOR SIPHON JET AND BLOWOUT TOILETS) MC-10-HS

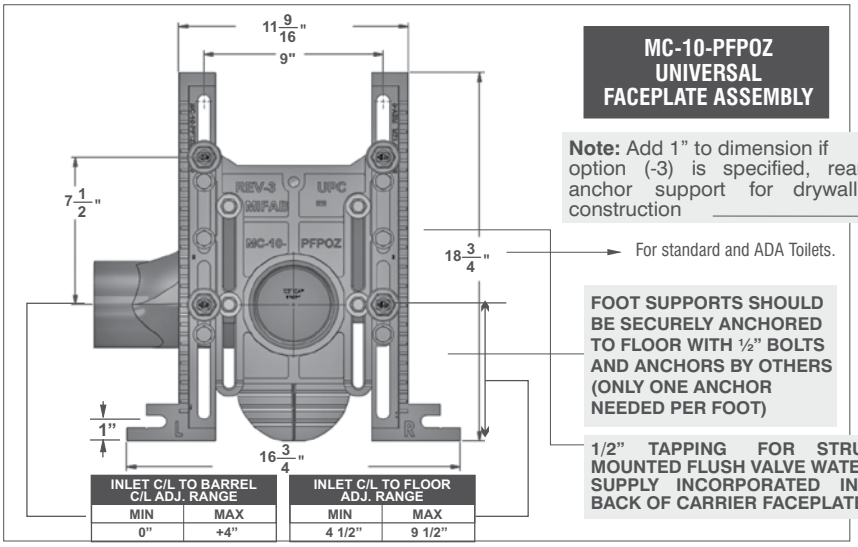

INLET C/L TO BARREL C/L ADJ. RANGE	
MIN	MAX
0"	+4"

INLET C/L TO FLOOR ADJ. RANGE	
MIN	MAX
4 1/2"	9 1/2"

MC-10-PFPOZ UNIVERSAL FACEPLATE ASSEMBLY

Note: Add 1" to dimension if option (-3) is specified, rear anchor support for drywall construction

For standard and ADA Toilets.

FOOT SUPPORTS SHOULD BE SECURELY ANCHORED TO FLOOR WITH ½" BOLTS AND ANCHORS BY OTHERS (ONLY ONE ANCHOR NEEDED PER FOOT)

1/2" TAPPING FOR STRUT MOUNTED FLUSH VALVE WATER SUPPLY INCORPORATED INTO BACK OF CARRIER FACEPLATE

*MC-10-HS is tested to support a 500 lb. load with the rear anchor support.

MC-10R-HS

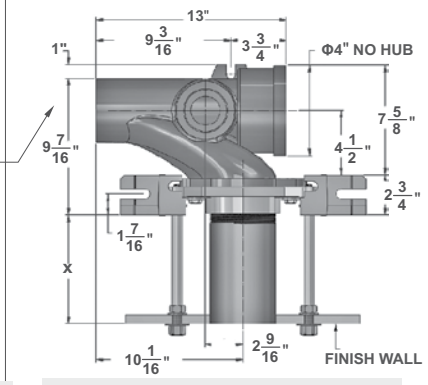

"X"=4" MIN TO 6-1/4 MAX WALL THICKNESS WITH STANDARD NIPPLE. MIN OF 5/8" POSSIBLE WITH SHORTENED NIPPLE

Note: right hand versions illustrated, left hand are mirror image

Note: Rear anchor support is included with every single carrier.

BREAKAWAY TABS
CENTERLINE OF NIPPLE TO FLOOR

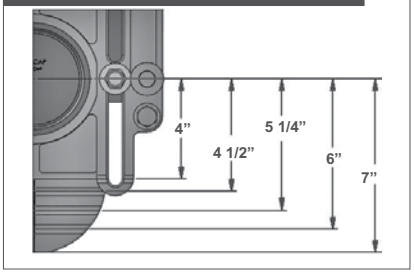

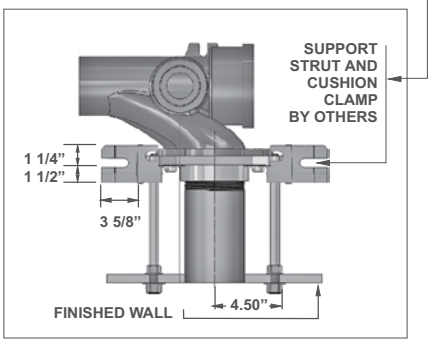

Note: 8" tapered thread ABS nipple shipped standard with MC-10 Series carriers. The universal faceplate assembly accepts all nipple variations, rolling thread (-OR), cast iron (-CI) and tapered thread ABS with adjustable horn (-AH). (See page 224)

"X"=4" MIN TO 6-1/4 MAX WALL THICKNESS WITH STANDARD NIPPLE. MIN. OF 5/8" POSSIBLE WITH SHORTENED NIPPLE

MC-10D-HS

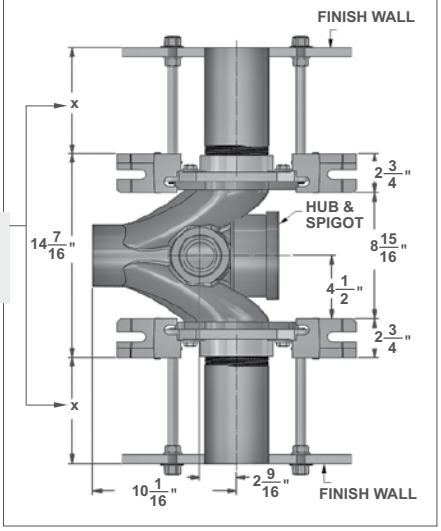

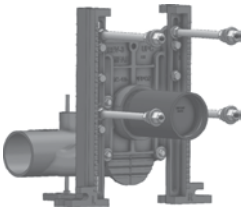

MC-10-HS			
MODEL NO.	DESCRIPTION	WEIGHT (Lbs.)	LIST PRICE
MC-10L-HS	Single left hand	66.00	$ 2122.00
MC-10R-HS	Single right hand	66.00	$ 2122.00
MC-10D-HS	Double - back to back	117.00	$ 3960.00

MC-10-HS OPTIONAL VARIATIONS:

SUFFIX	DESCRIPTION	LIST PRICE SINGLE	LIST PRICE DOUBLE
-01	Neoprene bowl gasket (MC-10-PBG)	$ 81.00	$ 162.00
-1	Finishing / Tiling Frame (MC-10-1-PTFK)	$ 112.00	$ 224.00
-3	Rear anchor support (MC-10-3-PRSFK)	Standard	N/A
-10	Auxiliary support, recommended with nipple lengths over 12"(MC-10-AFS)	$ 1121.00	$ 2242.00
-12	12" tapered thread ABS nipple* (MC-10-PN12-31)	No Add	No Add
-13	All galvanized	$ 1064.00	$ 2128.00
-14	Vandal proof finish trim (MC-10-PFH-14)	$ 182.00	$ 364.00
-17	Test plug for custom cast iron nipples	$ 80.00	$ 160.00
-19	Nipple wrench (MC-10-PCW)	$ 142.00	$ 142.00
-20	Flush valve support (MC-10-FVS)	$ 119.00	$ 238.00
-22	Less fitting	$ 1180.00	$ 2076.00

SUFFIX	DESCRIPTION	LIST PRICE SINGLE	LIST PRICE DOUBLE
-AH8	8" ABS nipple with adjustable horn (MC-10-PN8AH-31)	No Add	No Add
-AH12*	12" ABS nipple with adjustable horn* (MC-10-PN12AH-31)	No Add	No Add
-CI-4	4" rolling thread cast iron nipple (MC-10-PN4R-50)	No Add	No Add
-CI-6	6" rolling thread cast iron nipple (MC-10-PN6R-50)	No Add	No Add
-CI-8	8" rolling thread cast iron nipple (MC-10-PN8R-50)	No Add	No Add
-CI-12*	12" rolling thread cast iron nipple* (MC-10-PN12R-50)	$ 137.00	$ 274.00
-CI-24	24" rolling thread cast iron nipple (MC-10-PN24R-50)	$ 395.00	$ 790.00
-FM	Floor mount back outlet fixture support	No Add	No Add
-HD-750	750 lb. rated heavy duty	$ 2378.00	$ 4057.00
-HDX	1,000 Lb. rated extra heavy duty	$ 4148.00	$ 8161.00
-OR8	8" rolling thread ABS nipple (MC-10-PN8R-31)	No Add	No Add
-OR12*	12" rolling thread ABS nipple (MC-10-PN12R-31)	No Add	No Add
-PFAB	Prefabricated carriers	No Add	No Add

*** H-1167-KA-14 (** Threaded rods for 12" nipples 5/8" x 14") **$64.00 $128.00**

MC-10-27 HORIZONTAL ADJUSTABLE WATER CLOSET CARRIER WITH AUX.2" INLET (FOR SIPHON JET AND BLOWOUT TOILETS) MC-10-27

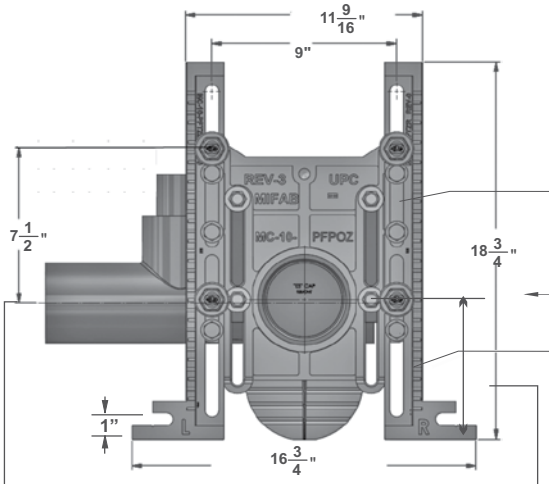

MC-10-PFPOZ UNIVERSAL FACEPLATE ASSEMBLY

½" TAPPING FOR STRUT MOUNTED FLUSH VALVE WATER SUPPLY INCORPORATED INTO BACK OF CARRIER FACEPLATE

FOOT SUPPORTS SHOULD BE SECURELY ANCHORED TO FLOOR WITH ½" BOLTS AND ANCHORS BY OTHERS (ONLY ONE ANCHOR NEEDED PER FOOT)

For standard and ADA toilets

INLET C/L TO FLOOR ADJ. RANGE	
MIN	MAX
4 1/2"	9 1/2"

INLET C/L TO BARREL C/L ADJ. RANGE	
MIN	MAX
0"	+4"

*MC-10-27 is tested to support a 500 lb. load with the rear anchor support.

MC-10D-27

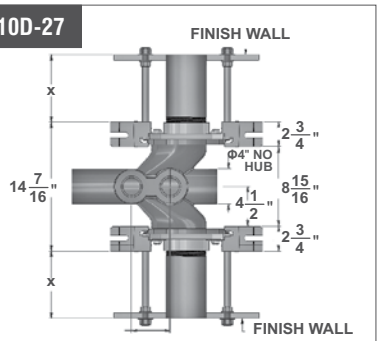

BREAKAWAY TABS
CENTERLINE OF NIPPLE TO FLOOR

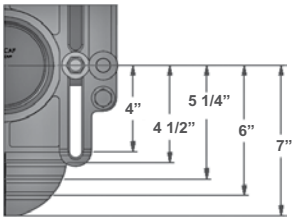

MC-10R-27

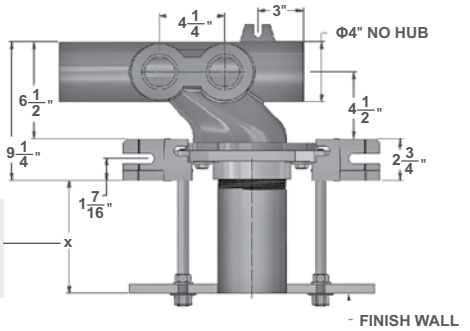

"X"=4" MIN TO 6-1/4 MAX WALL THICKNESS WITH STANDARD NIPPLE. MIN OF 5/8" POSSIBLE WITH SHORTENED NIPPLE

Note: left hand versionsillustrated, right hand are mirror image.

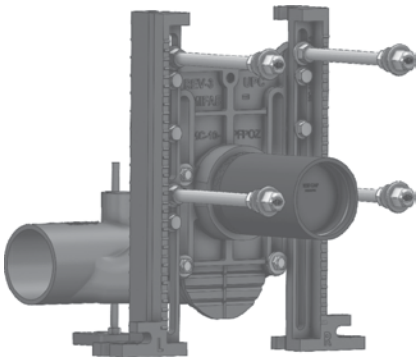

Note: Rear anchor support is included with every single carrier.

MC-10-27			
MODEL NO.	DESCRIPTION	WEIGHT (Lbs.)	LIST PRICE
MC-10L-27	Single left hand	66.00	$ 2360.00
MC-10R-27	Single right hand	66.00	$ 2360.00
MC-10D-27	Double - back to back	117.00	$ 3950.00
Add for:	-HS Hub and spigot connection (single)		$ 214.00
	(double)		$ 488.00

Note: 8" tapered thread ABS nipple shipped standard with MC-10 Series carriers. The universal faceplate assembly accepts all nipple variations, rolling thread (-OR), cast iron (-CI) and tapered thread ABS with adjustable horn (-AH). (See page 224).

MC-10-27 OPTIONAL VARIATIONS:

SUFFIX	DESCRIPTION	LIST PRICE SINGLE	LIST PRICE DOUBLE	SUFFIX	DESCRIPTION	LIST PRICE SINGLE	LIST PRICE DOUBLE
-01	Neoprene bowl gasket (MC-10-PBG)	$ 81.00	$ 162.00	-AH8	8" ABS nipple with adjustable horn (MC-10-PN8AH-31)	No Add	No Add
-1	Finishing / Tiling Frame (MC-10-1-PTFK)	$ 112.00	$ 224.00	-AH12*	12" ABS nipple with adjustable horn* (MC-10-PN12AH-31)	No Add	No Add
-3	Rear anchor support (MC-10-3-PRSFK)	Standard	N/A	-CI-4	4" rolling thread cast iron nipple (MC-10-PN4R-50)	No Add	No Add
-10	Auxiliary support, recommended with nipple lengths over 12"(MC-10-AFS)	$1121.00	$2242.00	-CI-6	6" rolling thread cast iron nipple (MC-10-PN6R-50)	No Add	No Add
				-CI-8	8" rolling thread cast iron nipple (MC-10-PN8R-50)	No Add	No Add
-12	12" tapered thread ABS nipple* (MC-10-PN12-31)	No Add	No Add	-CI-12*	12" rolling thread cast iron nipple* (MC-10-PN12R-50)	$ 137.00	$ 274.00
-13	All galvanized	$1064.00	$2128.00	-CI-24	24" rolling thread cast iron nipple (MC-10-PN24R-50)	$ 395.00	$ 790.00
-14	Vandal proof finish trim (MC-10-PFH-14)	$ 182.00	$ 364.00	-FM	Floor mount back outlet fixture support	No Add	No Add
-17	Test plug for custom cast iron nipples	$ 80.00	$ 160.00	-HD-750	750 lb. rated heavy duty	$ 2378.00	$ 4057.00
-19	Nipple wrench (MC-10-PCW)	$ 142.00	$ 142.00	-HDX	1,000 Lb. rated extra heavy duty	$ 4148.00	$ 8161.00
-20	Flush valve support (MC-10-FVS)	$ 119.00	$ 238.00	-OR8	8" rolling thread ABS nipple (MC-10-PN8R-31)	No Add	No Add
-22	Less fitting	$1418.00	$2066.00	-OR12*	12" rolling thread ABS nipple (MC-10-PN12R-31)	No Add	No Add
				-PFAB	Prefabricated carriers	No Add	No Add

* **H-1167-KA-14 (** Threaded rods for 12" nipples 5/8" x 14") **$64.00 $128.00**

Design and dimensions are subject to modification. Prices do not include applicable taxes. Visit **www.mifab.com** for the most recent product information.
MIFAB®, Inc., 1321 West 119th Street, Chicago, Illinois 60643-5109, USA Toll Free: 1-800-465-2736 • Fax: 1-773-341-3049
All sales subject to MIFAB's® Terms & Warranties. Please refer to inside front cover. sales@mifab.com • Canada Toll Free: 1-800-387-3880

MC-10-27-37 HORIZONTAL ADJUSTABLE WATER CLOSET CARRIER WITH AUX.2" INLET AND 37" LONG BARREL (FOR SIPHON JET AND BLOWOUT TOILETS) MC-10-27-37

MC-10-PFPOZ UNIVERSAL FACEPLATE ASSEMBLY

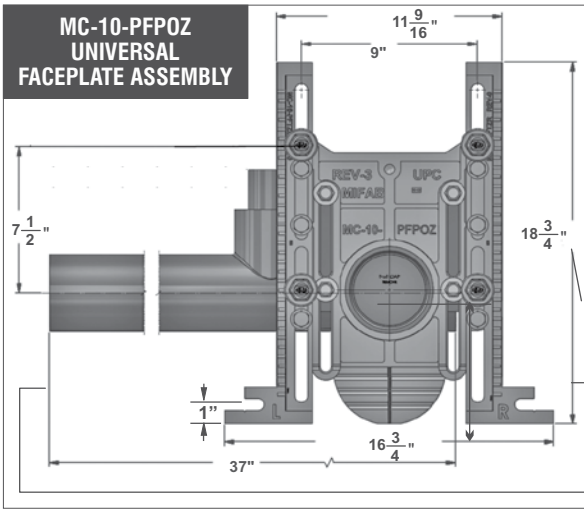

½" TAPPING FOR STRUT MOUNTED FLUSH VALVE WATER SUPPLY INCORPORATED INTO BACK OF CARRIER FACEPLATE

FOOT SUPPORTS SHOULD BE SECURELY ANCHORED TO FLOOR WITH ½" BOLTS AND ANCHORS BY OTHERS (ONLY ONE ANCHOR NEEDED PER FOOT)

For standard and ADA toilets

INLET C/L TO BARREL C/L ADJ. RANGE	
MIN	MAX
0"	+4"

INLET C/L TO FLOOR ADJ. RANGE	
MIN	MAX
4 1/2"	9 1/2"

*MC-10-27-37 is tested to support a 500 lb. load with the rear anchor support.

Note: 8" tapered thread ABS nipple shipped standard with MC-10 Series carriers. The universal faceplate assembly accepts all nipple variations, rolling thread (-OR), cast iron (-CI) and tapered thread ABS with adjustable horn (-AH). (See page 224).

BREAKAWAY TABS
CENTERLINE OF NIPPLE TO FLOOR

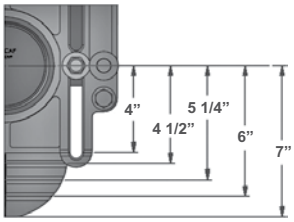

MC-10R-27-37

Note: Rear anchor support is included with every single carrier.

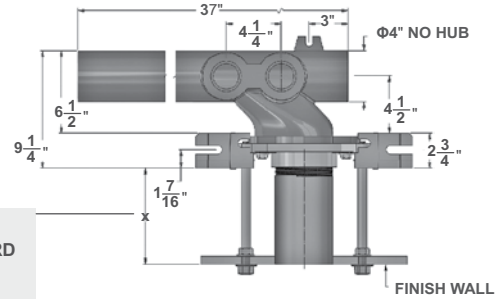

"X"=4" MIN TO 6-1/4 MAX WALL THICKNESS WITH STANDARD NIPPLE. MIN OF 5/8" POSSIBLE WITH SHORTENED NIPPLE

4 1/8" DIMENSION BETWEEN AUXILIARY INLET AND VENT IS IDEAL FOR A STANDARD WYE AND 1/8th BEND CONNECTION

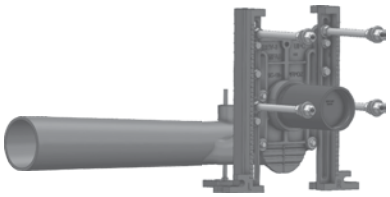

MC-10D-27-37

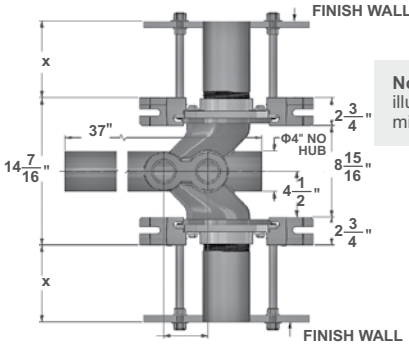

Note: left hand versions illustrated. Right hand are mirror image.

MC-10-27-37

MODEL NO.	DESCRIPTION	WEIGHT (Lbs.)	LIST PRICE
MC-10L-27-37	Single left hand	85.00	$ 2557.00
MC-10R-27-37	Single right hand	85.00	$ 2557.00
MC-10D-27-37	Double - back to back	135.00	$ 4218.00

MC-10-27-37 OPTIONAL VARIATIONS:

SUFFIX	DESCRIPTION	LIST PRICE SINGLE	LIST PRICE DOUBLE
-01	Neoprene bowl gasket (MC-10-PBG)	$ 81.00	$ 162.00
-1	Finishing / Tiling Frame (MC-10-1-PTFK)	$ 112.00	$ 224.00
-3	Rear anchor support (MC-10-3-PRSFK)	Standard	N/A
-10	Auxiliary support, recommended with nipple lengths over 12"(MC-10-AFS)	$1121.00	$2242.00
-12	12" tapered thread ABS nipple* (MC-10-PN12-31)	No Add	No Add
-13	All galvanized	$1064.00	$2128.00
-14	Vandal proof finish trim (MC-10-PFH-14)	$ 182.00	$ 364.00
-17	Test plug for custom cast iron nipples	$ 80.00	$ 160.00
-19	Nipple wrench (MC-10-PCW)	$ 142.00	$ 142.00
-20	Flush valve support (MC-10-FVS)	$ 119.00	$ 238.00
-22	Less fitting	$1615.00	$2334.00

SUFFIX	DESCRIPTION	LIST PRICE SINGLE	LIST PRICE DOUBLE
-AH8	8" ABS nipple with adjustable horn (MC-10-PN8AH-31)	No Add	No Add
-AH12*	12" ABS nipple with adjustable horn* (MC-10-PN12AH-31)	No Add	No Add
-CI-4	4" rolling thread cast iron nipple (MC-10-PN4R-50)	No Add	No Add
-CI-6	6" rolling thread cast iron nipple (MC-10-PN6R-50)	No Add	No Add
-CI-8	8" rolling thread cast iron nipple (MC-10-PN8R-50)	No Add	No Add
-CI-12*	12" rolling thread cast iron nipple* (MC-10-PN12R-50)	$ 137.00	$ 274.00
-CI-24	24" rolling thread cast iron nipple (MC-10-PN24R-50)	$ 395.00	$ 790.00
-FM	Floor mount back outlet fixture support	No Add	No Add
-HD-750	750 lb. rated heavy duty	$ 2378.00	$ 4057.00
-HDX	1,000 Lb. rated extra heavy duty	$ 4148.00	$ 8161.00
-OR8	8" rolling thread ABS nipple (MC-10-PN8R-31)	No Add	No Add
-OR12*	12" rolling thread ABS nipple (MC-10-PN12R-31)	No Add	No Add
-PFAB	Prefabricated carriers	No Add	No Add

* H-1167-KA-14 (Threaded rods for 12" nipples 5/8" x 14") $64.00 $128.00

MC-10-27-37-HS — HORIZONTAL ADJUSTABLE HUB AND SPIGOT WATER CLOSET CARRIER WITH AUX. 2" INLET & 37" LONG BARREL (FOR SIPHON JET AND BLOWOUT TOILETS) — MC-10-27-37-HS

Note: 8" tapered thread ABS nipple shipped standard with MC-10 Series carriers. The universal faceplate assembly accepts all nipple variations, rolling thread (-OR), cast iron (-CI) and tapered thread ABS with adjustable horn (-AH). (See page 224).

BREAKAWAY TABS
CENTERLINE OF NIPPLE TO FLOOR

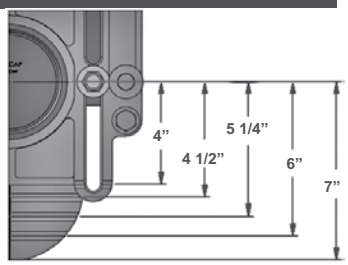

MC-10-PFPOZ UNIVERSAL FACEPLATE ASSEMBLY

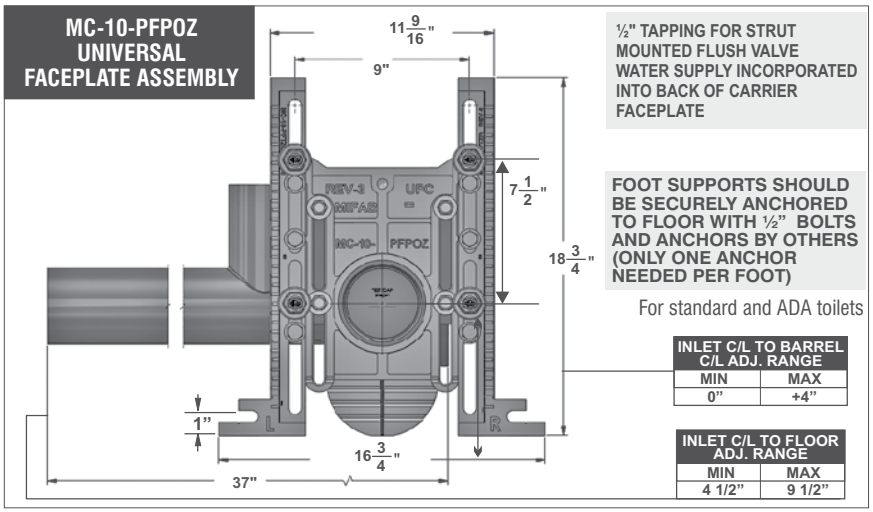

½" TAPPING FOR STRUT MOUNTED FLUSH VALVE WATER SUPPLY INCORPORATED INTO BACK OF CARRIER FACEPLATE

FOOT SUPPORTS SHOULD BE SECURELY ANCHORED TO FLOOR WITH ½" BOLTS AND ANCHORS BY OTHERS (ONLY ONE ANCHOR NEEDED PER FOOT)

For standard and ADA toilets

INLET C/L TO BARREL C/L ADJ. RANGE	
MIN	MAX
0"	+4"

INLET C/L TO FLOOR ADJ. RANGE	
MIN	MAX
4 1/2"	9 1/2"

*MC-10-27-37-HS is tested to support a 500 lb. load with the rear anchor support.

MC-10R-27-37-HS

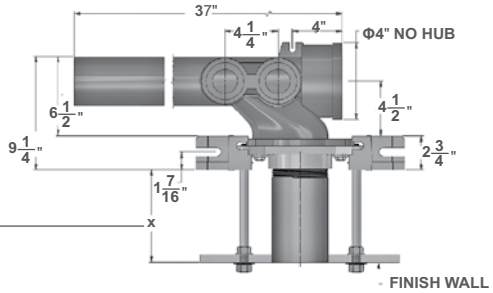

Note: left hand versions illustrated. Right hand are mirror image.

"X"=4" MIN TO 6-1/4 MAX WALL THICKNESS WITH STANDARD NIPPLE. MIN OF 5/8" POSSIBLE WITH SHORTENED NIPPLE

4 1/8" DIMENSION BETWEEN AUXILIARY INLET AND VENT IS IDEAL FOR A STANDARD WYE AND 1/8th BEND CONNECTION

Note: Rear anchor support is included with every single carrier.

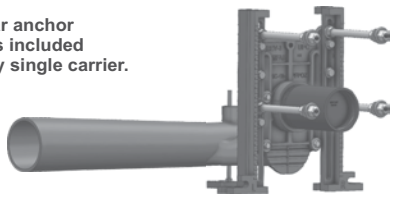

MC-10D-27-37-HS

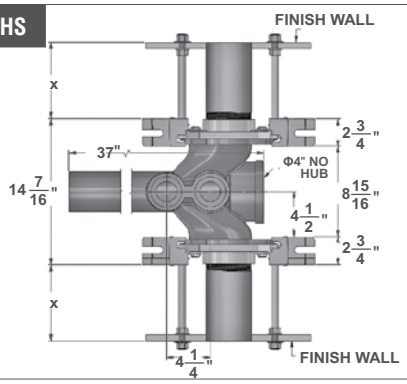

MC-10-27-37-HS

MODEL NO.	DESCRIPTION	WEIGHT (Lbs.)	LIST PRICE
MC-10L-27-37-HS	Single left hand	85.00	$ 2856.00
MC-10R-27-37-HS	Single right hand	85.00	$ 2856.00
MC-10D-27-37-HS	Double - back to back	135.00	$ 4968.00

MC-10-27-37-HS OPTIONAL VARIATIONS:

SUFFIX	DESCRIPTION	LIST PRICE SINGLE	LIST PRICE DOUBLE
-01	Neoprene bowl gasket (MC-10-PBG)	$ 81.00	$ 162.00
-1	Finishing / Tiling Frame (MC-10-1-PTFK)	$ 112.00	$ 224.00
-3	Rear anchor support (MC-10-3-PRSFK)	Standard	N/A
-10	Auxiliary support, recommended with nipple lengths over 12"(MC-10-AFS)	$ 1121.00	$ 2242.00
-12	12" tapered thread ABS nipple* (MC-10-PN12-31)	No Add	No Add
-13	All galvanized	$ 1064.00	$ 2128.00
-14	Vandal proof finish trim (MC-10-PFH-14)	$ 182.00	$ 364.00
-17	Test plug for custom cast iron nipples	$ 80.00	$ 160.00
-19	Nipple wrench (MC-10-PCW)	$ 142.00	$ 142.00
-20	Flush valve support (MC-10-FVS)	$ 119.00	$ 238.00
-22	Less fitting	$ 1914.00	$ 3084.00

SUFFIX	DESCRIPTION	LIST PRICE SINGLE	LIST PRICE DOUBLE
-AH8	8" ABS nipple with adjustable horn (MC-10-PN8AH-31)	No Add	No Add
-AH12*	12" ABS nipple with adjustable horn* (MC-10-PN12AH-31)	No Add	No Add
-CI-4	4" rolling thread cast iron nipple (MC-10-PN4R-50)	No Add	No Add
-CI-6	6" rolling thread cast iron nipple (MC-10-PN6R-50)	No Add	No Add
-CI-8	8" rolling thread cast iron nipple (MC-10-PN8R-50)	No Add	No Add
-CI-12*	12" rolling thread cast iron nipple* (MC-10-PN12R-50)	$ 137.00	$ 274.00
-CI-24	24" rolling thread cast iron nipple (MC-10-PN24R-50)	$ 395.00	$ 790.00
-FM	Floor mount back outlet fixture support	No Add	No Add
-HD-750	750 lb. rated heavy duty	$ 2378.00	$ 4057.00
-HDX	1,000 Lb. rated extra heavy duty	$ 4148.00	$ 8161.00
-OR8	8" rolling thread ABS nipple (MC-10-PN8R-31)	No Add	No Add
-OR12*	12" rolling thread ABS nipple (MC-10-PN12R-31)	No Add	No Add
-PFAB	Prefabricated carriers	No Add	No Add

*** H-1167-KA-14 (** Threaded rods for 12" nipples 5/8" x 14") **$64.00 $128.00**

Design and dimensions are subject to modification. Prices do not include applicable taxes. Visit **www.mifab.com** for the most recent product information.

MIFAB®, Inc., 1321 West 119th Street, Chicago, Illinois 60643-5109, USA
Toll Free: 1-800-465-2736 • Fax: 1-773-341-3049
sales@mifab.com • Canada Toll Free: 1-800-387-3880

All sales subject to MIFAB's® Terms & Warranties. Please refer to inside front cover.

MC-10-HDX 1,000LBS. EXTRA HEAVY DUTY HORIZONTAL ADJUSTABLE WATER CLOSET CARRIER MC-10-HDX

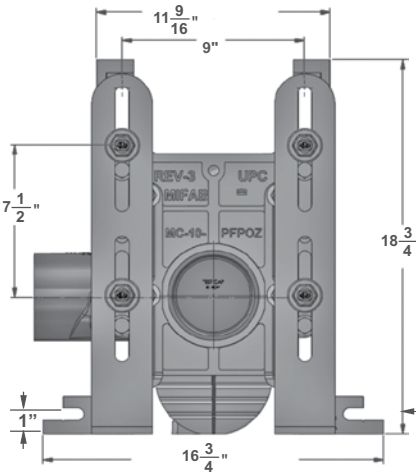

MC-10-PFPOZ UNIVERSAL FACEPLATE ASSEMBLY

Note: Add 1" to dimension if option (-3) is specified, rear anchor support for drywall construction

For standard and ADA Toilets.

FOOT SUPPORTS SHOULD BE SECURELY ANCHORED TO FLOOR WITH ½" BOLTS AND ANCHORS BY OTHERS (ONLY ONE ANCHOR NEEDED PER FOOT)

EXTRA HEAVY DUTY SUPPORT FRAME BOLTED TO FLOOR TO PROVIDE THE 1,000 LBS. LOAD CAPABILITY

INLET C/L TO BARREL C/L ADJ. RANGE	
MIN	MAX
0"	+4"

INLET C/L TO FLOOR ADJ. RANGE	
MIN	MAX
4 1/2"	9 1/2"

MC-10R-HDX

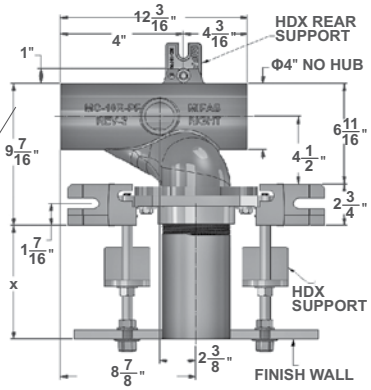

"X"=4" MIN TO 6-1/4 MAX WALL THICKNESS WITH STANDARD NIPPLE.

Note: right hand versions illustrated, left hand are mirror image

Note: Rear anchor support is included with every single carrier.

BREAK AWAY TABS
CENTERLINE OF NIPPLE TO FLOOR

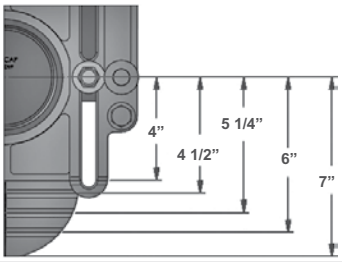

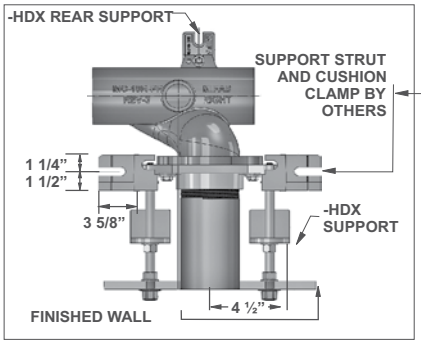

Note: 8" tapered thread ABS nipple shipped standard with MC-10 Series carriers. The universal faceplate assembly accepts all nipple variations, rolling thread (-OR), cast iron (-CI) and tapered thread ABS with adjustable horn (-AH). (See page 224).

"X"=4" MIN TO 6-1/4 MAX WALL THICKNESS WITH STANDARD NIPPLE.

MC-10D-HDX

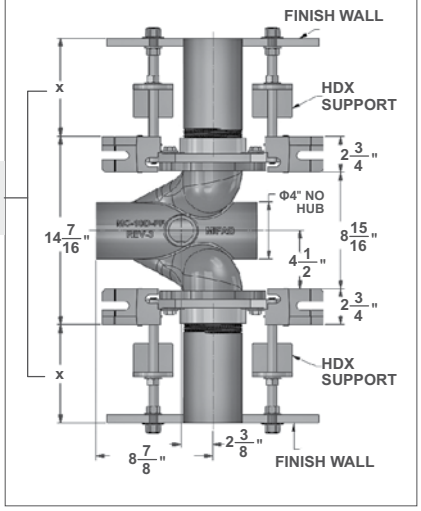

MC-10-HDX			
MODEL NO.	DESCRIPTION	WEIGHT (Lbs.)	LIST PRICE
MC-10L-HDX	Single left hand	85.00	$ 6032.00
MC-10R-HDX	Single right hand	85.00	$ 6032.00
MC-10D-HDX	Double - back to back	160.00	$ 11,635.00
Add for:	-HS Hub and spigot connection	(single)	$ 240.00
		(double)	$ 488.00

MC-10-HDX OPTIONAL VARIATIONS:

SUFFIX	DESCRIPTION	LIST PRICE SINGLE	LIST PRICE DOUBLE	SUFFIX	DESCRIPTION	LIST PRICE SINGLE	LIST PRICE DOUBLE
-01	Neoprene bowl gasket (MC-10-PBG)	$ 81.00	$ 162.00	-AH8	8" ABS nipple with adjustable horn	No Add	No Add
-1	Finishing / Tiling frame (MC-10-1-PTFK)	$ 112.00	$ 224.00	-AH12*	12" ABS nipple with adjustable horn*	No Add	No Add
-12	12" tapered thread ABS nipple*	No Add	No Add	-CI-4	4" rolling thread cast iron nipple	No Add	No Add
-13	All galvanized	$ 1064.00	$ 2242.00	-CI-6	6" rolling thread cast iron nipple	No Add	No Add
-14	Vandal proof finished trim (MC-10-PFH-14)	$ 182.00	$ 364.00	-CI-8	8" rolling thread cast iron nipple	No Add	No Add
-17	Test plug for custom cast iron nipples	$ 80.00	$ 160.00	-CI-12*	12" rolling thread cast iron nipple*	$ 137.00	$ 274.00
-19	Nipple wrench (MC-10-PCW)	$ 142.00	$ 142.00	-CI-24	24" rolling thread cast iron nipple	$ 395.00	$ 790.00
-20	Flush valve support (MC-10-FVS)	$ 119.00	$ 238.00	-OR8	8" rolling thread ABS nipple	No Add	No Add
-22	Less fitting	$ 943.00	$ 1597.00	-OR12*	12" rolling thread ABS nipple*	No Add	No Add
				-PFAB	Prefabricated carriers	No Add	No Add

*** H-1167-KA-14 (** Threaded rods for 12" nipples 5/8" x 14") **$ 64.00 $ 128.00**

MC-12 VERTICAL ADJUSTABLE WATER CLOSET CARRIER (FOR SIPHON JET AND BLOWOUT TOILETS) MC-12

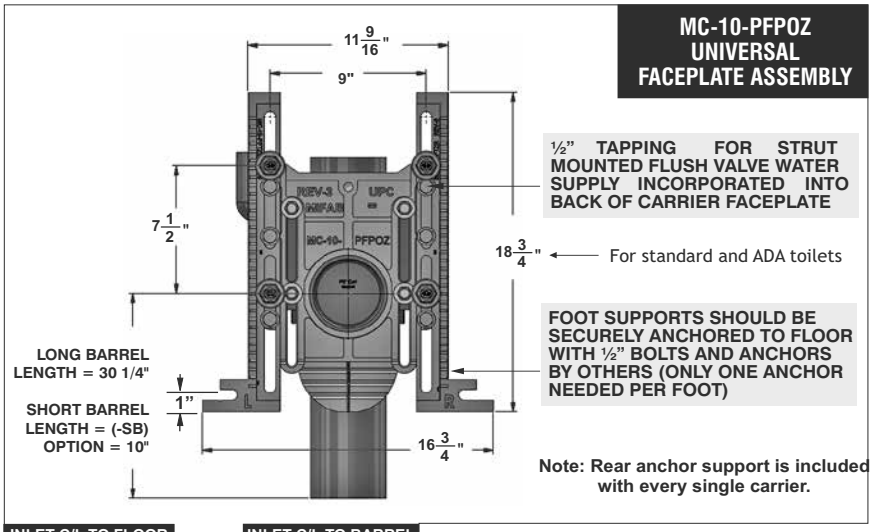

INLET C/L TO FLOOR ADJ. RANGE	
MIN	MAX
4 1/2"	9 1/2"

INLET C/L TO BARREL C/L ADJ. RANGE	
MIN	MAX
0"	+4"

*MC-12 is tested to support a 500 lb. load with the rear anchor support.

BREAKAWAY TABS
CENTERLINE OF NIPPLE TO FLOOR

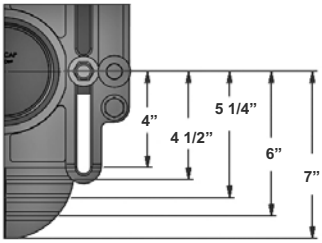

MC-12

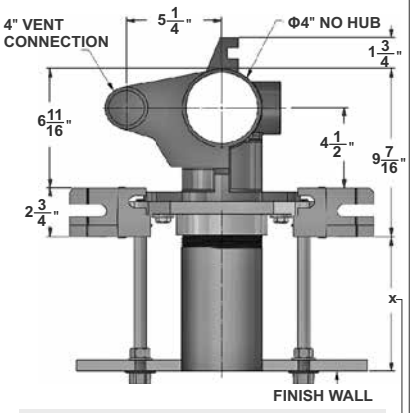

"X"=4" MIN TO 6-1/4 MAX WALL THICKNESS WITH STANDARD NIPPLE. MIN OF 5/8" POSSIBLE WITH SHORTENED NIPPLE

MC-12D

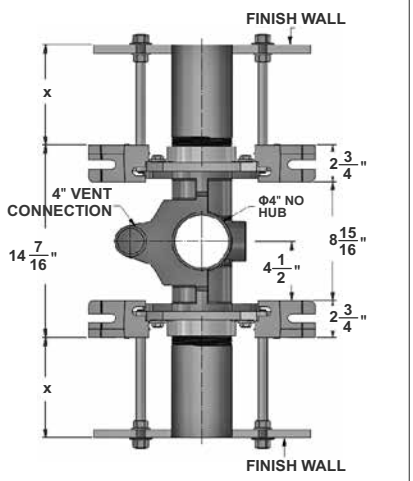

Note: 8" tapered thread ABS nipple shipped standard with MC-10 Series carriers. The universal faceplate assembly accepts all nipple variations, rolling thread (-OR), cast iron (-CI) and tapered thread ABS with adjustable horn (-AH). (See page 224).

Function: To be used as a stand alone carrier. No side inlets.

MC-12			
MODEL NO.	DESCRIPTION	WEIGHT (Lbs.)	LIST PRICE
MC-12	Single	75.00	$ 2335.00
MC-12D	Double - back to back	125.00	$ 4131.00

*NOTE: MC-14 fixed vertical or MC-15 vertical offset recommended for most applications

MC-12 OPTIONAL VARIATIONS:

SUFFIX	DESCRIPTION	LIST PRICE SINGLE	LIST PRICE DOUBLE	SUFFIX	DESCRIPTION	LIST PRICE SINGLE	LIST PRICE DOUBLE
-01	Neoprene bowl gasket (MC-10-PBG)	$ 81.00	$ 162.00	-AH8	8" ABS nipple with adjustable horn (MC-10-PN8AH-31)	No Add	No Add
-1	Finishing / Tiling Frame (MC-10-1-PTFK)	$ 112.00	$ 224.00	-AH12*	12" ABS nipple with adjustable horn* (MC-10-PN12AH-31)	No Add	No Add
-3	Rear anchor support (MC-10-3-PRSFK)	Standard	N/A	-CI-4	4" rolling thread cast iron nipple (MC-10-PN4R-50)	No Add	No Add
-10	Auxiliary support, recommended with nipple lengths over 12"(MC-10-AFS)	$1121.00	$2242.00	-CI-6	6" rolling thread cast iron nipple (MC-10-PN6R-50)	No Add	No Add
				-CI-8	8" rolling thread cast iron nipple (MC-10-PN8R-50)	No Add	No Add
-12	12" tapered thread ABS nipple* (MC-10-PN12-31)	No Add	No Add	-CI-12*	12" rolling thread cast iron nipple* (MC-10-PN12R-50)	$ 137.00	$ 274.00
-13	All galvanized	$1064.00	$2128.00	-CI-24	24" rolling thread cast iron nipple (MC-10-PN24R-50)	$ 395.00	$ 790.00
-14	Vandal proof finish trim (MC-10-PFH-14)	$ 182.00	$ 364.00	-FM	Floor mount back outlet fixture support	No Add	No Add
-17	Test plug for custom cast iron nipples	$ 80.00	$ 160.00	-HD-750	750 lb. rated heavy duty	$2378.00	$4057.00
-19	Nipple wrench (MC-10-PCW)	$ 142.00	$ 142.00	-HDX	1,000 Lb. rated extra heavy duty	$4148.00	$8161.00
-20	Flush valve support (MC-10-FVS)	$ 119.00	$ 238.00	-OR8	8" rolling thread ABS nipple (MC-10-PN8R-31)	No Add	No Add
-22	Less fitting	$1393.00	$2247.00	-OR12*	12" rolling thread ABS nipple (MC-10-PN12R-31)	No Add	No Add
				-PFAB	Prefabricated carriers	No Add	No Add

* H-1167-KA-14 (Threaded rods for 12" nipples 5/8" x 14") $64.00 $128.00

FIXTURE CARRIERS

Design and dimensions are subject to modification. Prices do not include applicable taxes. Visit www.mifab.com for the most recent product information.
MIFAB®, Inc., 1321 West 119th Street, Chicago, Illinois 60643-5109, USA Toll Free: 1-800-465-2736 • Fax: 1-773-341-3049
All sales subject to MIFAB's® Terms & Warranties. Please refer to inside front cover. sales@mifab.com • Canada Toll Free: 1-800-387-3880

MC-12-HS VERTICAL ADJUSTABLE HUB AND SPIGOT WATER CLOSET CARRIER (FOR SIPHON JET AND BLOWOUT TOILETS) MC-12-HS

MC-10-PFPOZ UNIVERSAL FACEPLATE ASSEMBLY

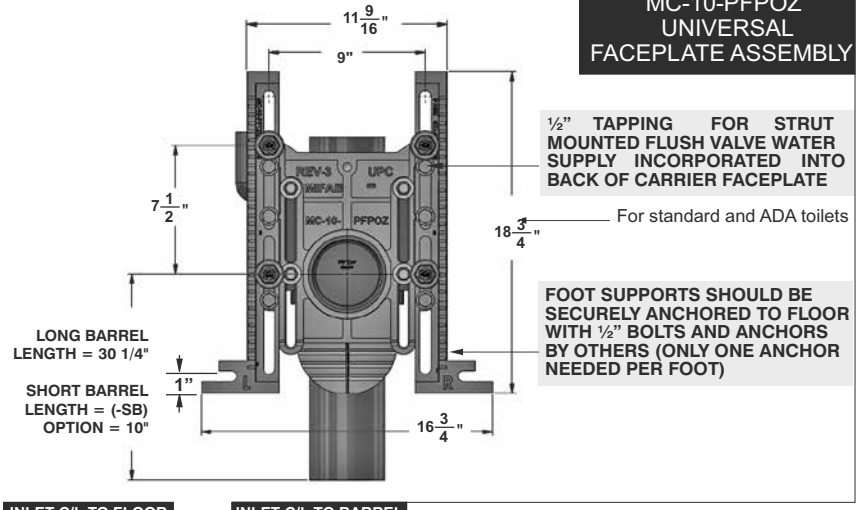

INLET C/L TO FLOOR ADJ. RANGE	
MIN	MAX
4 1/2"	9 1/2"

INLET C/L TO BARREL C/L ADJ. RANGE	
MIN	MAX
0"	+4"

Note: MC-12-HS is tested to support a 500 LB. load with the rear anchor support.

MC-12-HS

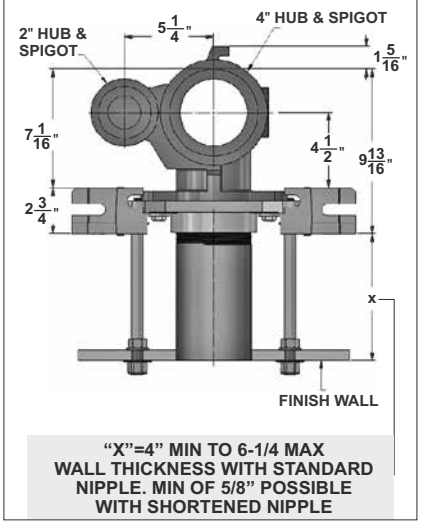

BREAKAWAY TABS
CENTERLINE OF NIPPLE TO FLOOR

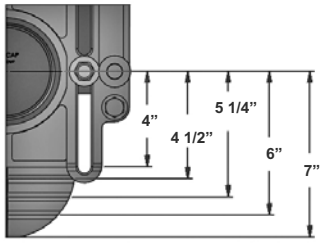

MC-12D-HS

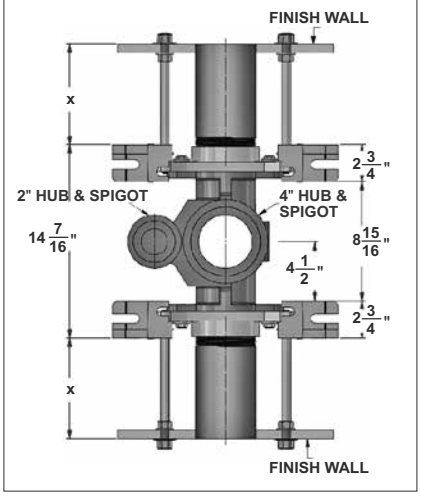

Note: 8" tapered thread ABS nipple shipped standard with MC-10 Series carriers. The universal faceplate assembly accepts all nipple variations, rolling thread (-OR), cast iron (-CI) and tapered thread ABS with adjustable horn (-AH). (See page 224).

Note: Rear anchor support is included with every single carrier.

***NOTE: MC-14 fixed vertical or MC-15 vertical offset recommended for most applications**

MC-12-HS			
MODEL NO.	DESCRIPTION	WEIGHT (Lbs.)	LIST PRICE
MC-12-HS	Single left hand	75.00	$ 2512.00
MC-12D-HS	Double - back to back	125.00	$ 4341.00

MC-12-HS OPTIONAL VARIATIONS:

SUFFIX	DESCRIPTION	LIST PRICE SINGLE	LIST PRICE DOUBLE	SUFFIX	DESCRIPTION	LIST PRICE SINGLE	LIST PRICE DOUBLE
-01	Neoprene bowl gasket (MC-10-PBG)	$ 81.00	$ 162.00	-31	Two 2" auxiliary inlets	$ 943.00	$ 943.00
-1	Finishing / Tiling frame (MC-10-1-PTFK)	$ 112.00	$ 224.00	-AH8	8" ABS nipple with adjustable horn	No Add	No Add
-3	Rear anchor support (MC-10-3-PRSFK)	Standard	N/A	-AH12*	12" ABS nipple with adjustable horn*	No Add	No Add
-10	Auxiliary support, recommended with nipple lengths over 12" (MC-10-AFS)	$ 1121.00	$ 2242.00	-CI-4	4" rolling thread cast iron nipple	No Add	No Add
				-CI-6	6" rolling thread cast iron nipple	No Add	No Add
-12	12" tapered thread ABS nipple*	No Add	No Add	-CI-8	8" rolling thread cast iron nipple	137.00	274.00
-13	All galvanized	$ 1064.00	$ 2128.00	-CI-12*	12" rolling thread cast iron nipple*	$ 395.00	$ 790.00
-14	Vandal proof finished trim (MC-10-PFH-14)	$ 182.00	$ 364.00	-CI-24	24" rolling thread cast iron nipple (MC-10-PN24R-50)	$ No Add	$ No Add
-17	Test plug for custom cast iron nipples	$ 80.00	$ 160.00	-HD-750	750 lb rated heavy duty	$ 2378.00	$ 4057.00
-19	Nipple wrench (MC-10-PCW)	$ 142.00	$ 142.00	-HDX	1,000 lb. rated extra heavy duty	$ 4148.00	$ 8161.00
-20	Flush valve support (MC-10-FVS)	$ 119.00	$ 238.00	-OR8	8" rolling thread ABS nipple	No Add	No Add
-22	Less fitting	$ 1570.00	$ 2457.00	-OR12*	12" rolling thread ABS nipple*	No Add	No Add
-25	2" auxiliary inlet, right side	$ 476.00	$ 476.00	-PFAB	Prefabricated carriers	No Add	No Add
-26	2" auxiliary inlet, left side	$ 476.00	$ 476.00				

*** H-1167-KA-14 (** Threaded rods for 12" nipples 5/8" x 14") **$64.00 $128.00**

MC-13 VERTICAL ADJUSTABLE WATER CLOSET CARRIER WITH ONE OR TWO SIDE INLETS (FOR SIPHON JET AND BLOWOUT TOILETS) MC-13

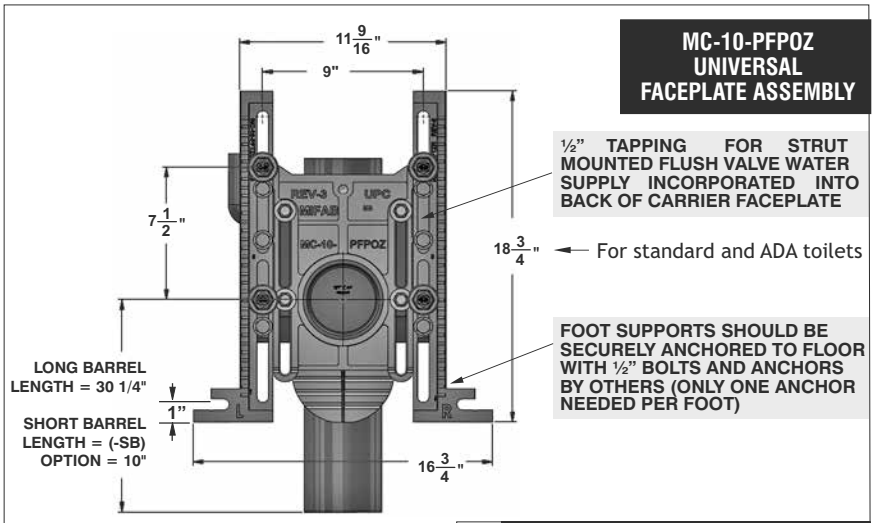

INLET C/L TO FLOOR ADJ. RANGE	
MIN	MAX
4 1/2"	9 1/2"

INLET C/L TO BARREL C/L ADJ. RANGE	
MIN	MAX
0"	+4"

Note: MC-13 is tested to support a 500 LB. load with the rear anchor support.

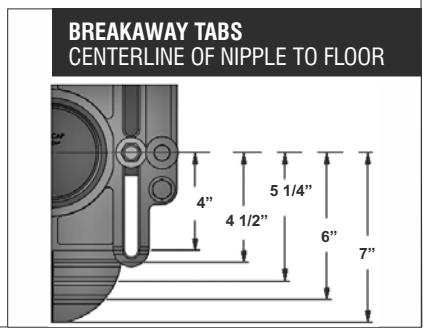

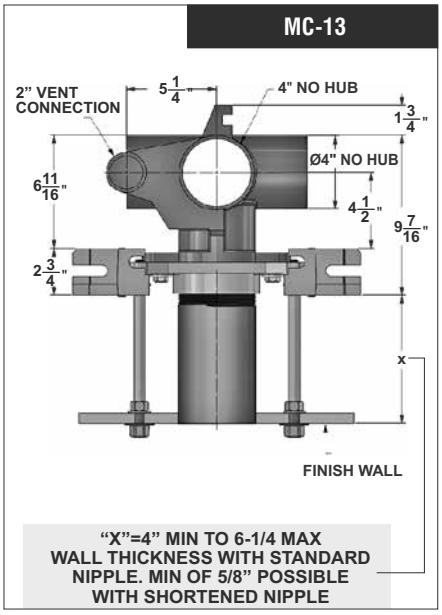

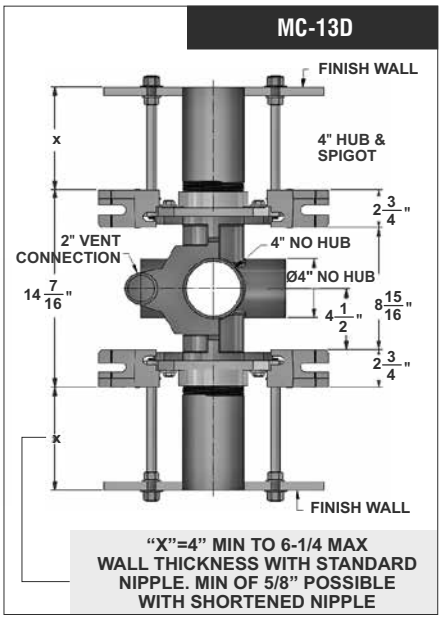

Note: 8" tapered thread ABS nipple shipped standard with MC-13 Series carriers. The universal faceplate assembly accepts all nipple variations, rolling thread (-OR), cast iron (-CI) and tapered thread ABS with adjustable horn (-AH). (See page 224).

Note: Rear anchor support is included with every single carrier.

MC-13

MODEL NO.	DESCRIPTION	WEIGHT (Lbs.)	LIST PRICE
MC-13-2	Single - two side inlet	80.00	$ 3153.00
MC-13L	Single - one left hand side inlet	80.00	$ 2739.00
MC-13R	Single - one right hand side inlet	80.00	$ 2739.00
MC-13D	Double - back to back one side inlet	130.00	$ 4516.00
MC-13D-2	Double - back to back two side inlet	130.00	$ 4917.00

MC-13 OPTIONAL VARIATIONS:

SUFFIX	DESCRIPTION	LIST PRICE SINGLE	LIST PRICE DOUBLE	SUFFIX	DESCRIPTION	LIST PRICE SINGLE	LIST PRICE DOUBLE
-01	Neoprene bowl gasket (MC-10-PBG)	$ 81.00	$ 162.00	-31	Two 2" auxiliary inlets	$ 943.00	$ 943.00
-1	Finishing / Tiling frame (MC-10-1-PTFK)	$ 112.00	$ 224.00	-AH8	8" ABS nipple with adjustable horn	No Add	No Add
-3	Rear anchor support (MC-10-3-PRSFK)	Standard	N/A	-AH12*	12" ABS nipple with adjustable horn*	No Add	No Add
-10	Auxiliary support, recommended with nipple lengths over 12" (MC-10-AFS)	$ 1121.00	$ 2242.00	-CI-4	4" rolling thread cast iron nipple	No Add	No Add
				-CI-6	6" rolling thread cast iron nipple	No Add	No Add
-12	12" tapered thread ABS nipple*	No Add	No Add	-CI-8	8" rolling thread cast iron nipple	137.00	274.00
-13	All galvanized	$ 1064.00	$ 2128.00	-CI-12*	12" rolling thread cast iron nipple*	$ 395.00	$ 790.00
-14	Vandal proof finished trim (MC-10-PFH-14)	$ 182.00	$ 364.00	-CI-24	24" rolling thread cast iron nipple (MC-10-PN24R-50)	$ No Add	$ No Add
-17	Test plug for custom cast iron nipples	$ 80.00	$ 160.00	-HD-750	750 lb rated heavy duty	$ 2378.00	$ 4057.00
-19	Nipple wrench (MC-10-PCW)	$ 142.00	$ 142.00	-HDX	1,000 lb. rated extra heavy duty	$ 4148.00	$ 8161.00
-20	Flush valve support (MC-10-FVS)	$ 119.00	$ 238.00	-OR8	8" rolling thread ABS nipple	No Add	No Add
-22	Less fitting	$ 1797.00	$ 2632.00	-OR12*	12" rolling thread ABS nipple*	No Add	No Add
-25	2" auxiliary inlet, right side	$ 476.00	$ 476.00	-PFAB	Prefabricated carriers	No Add	No Add
-26	2" auxiliary inlet, left side	$ 476.00	$ 476.00				

* H-1167-KA-14 (Threaded rods for 12" nipples 5/8" x 14") $64.00 $128.00

Design and dimensions are subject to modification. Prices do not include applicable taxes. Visit www.mifab.com for the most recent product information.
MIFAB®, Inc., 1321 West 119th Street, Chicago, Illinois 60643-5109, USA Toll Free: 1-800-465-2736 • Fax: 1-773-341-3049
All sales subject to MIFAB's® Terms & Warranties. Please refer to inside front cover. sales@mifab.com • Canada Toll Free: 1-800-387-3880

MC-13-HS VERTICAL ADJUSTABLE HUB AND SPIGOT WATER CLOSET CARRIER WITH ONE OR TWO SIDE INLETS (FOR SIPHON JET AND BLOWOUT TOILETS) MC-13-HS

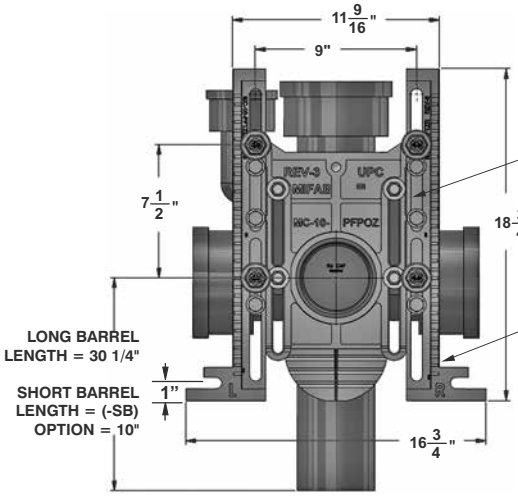

MC-10-PFPOZ UNIVERSAL FACEPLATE ASSEMBLY

½" TAPPING FOR STRUT MOUNTED FLUSH VALVE WATER SUPPLY INCORPORATED INTO BACK OF CARRIER FACEPLATE

For standard and ADA toilets

FOOT SUPPORTS SHOULD BE SECURELY ANCHORED TO FLOOR WITH ½" BOLTS AND ANCHORS BY OTHERS (ONLY ONE ANCHOR NEEDED PER FOOT)

INLET C/L TO FLOOR ADJ. RANGE	
MIN	MAX
4 1/2"	9 1/2"

INLET C/L TO BARREL C/L ADJ. RANGE	
MIN	MAX
0"	+4"

Note: Rear anchor support is included with every single carrier.

Note: MC-13-HS is tested to support a 500 LB. load with the rear anchor support.

BREAKAWAY TABS
CENTERLINE OF NIPPLE TO FLOOR

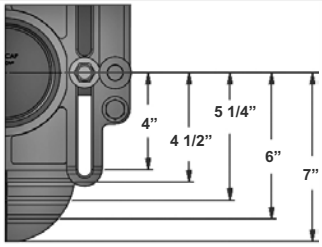

MC-13-HS

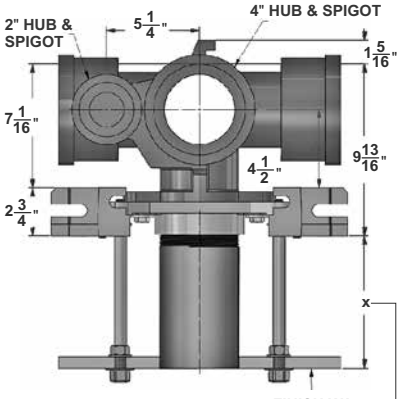

"X"=4" MIN TO 6-1/4 MAX WALL THICKNESS WITH STANDARD NIPPLE. MIN OF 5/8" POSSIBLE WITH SHORTENED NIPPLE

MC-13D-HS

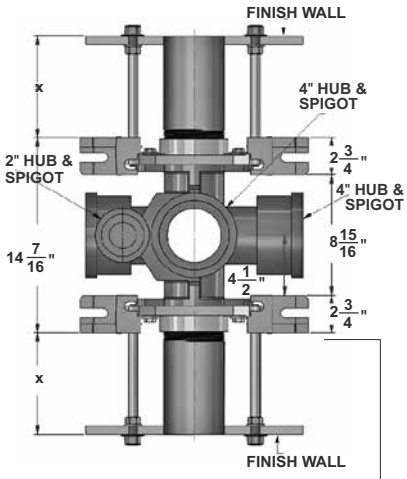

"X"=4" MIN TO 6-1/4 MAX WALL THICKNESS WITH STANDARD NIPPLE. MIN OF 5/8" POSSIBLE WITH SHORTENED NIPPLE

Note: 8" tapered thread ABS nipple shipped standard with MC-13 Series carriers. The universal faceplate assembly accepts all nipple variations, rolling thread (-OR), cast iron (-CI) and tapered thread ABS with adjustable horn (-AH). (See page 224).

MC-13-HS			
MODEL NO.	DESCRIPTION	WEIGHT (Lbs.)	LIST PRICE
MC-13-2-HS	Single - two side inlets	80.00	$ 3324.00
MC-13L-HS	Single - one left hand side inlet	80.00	$ 2916.00
MC-13R-HS	Single - one right hand side inlet	80.00	$ 2916.00
MC-13D-HS	Double - back to back one side inlet	130.00	$ 4745.00
MC-13D-2-HS	Double - back to back two side inlets	130.00	$ 5156.00

MC-13-HS OPTIONAL VARIATIONS:

SUFFIX	DESCRIPTION	LIST PRICE SINGLE	LIST PRICE DOUBLE	SUFFIX	DESCRIPTION	LIST PRICE SINGLE	LIST PRICE DOUBLE
-01	Neoprene bowl gasket (MC-10-PBG)	$ 81.00	$ 162.00	-AH8	8" ABS nipple with adjustable horn	No Add	No Add
-1	Finishing / Tiling frame (MC-10-1-PTFK)	$ 112.00	$ 224.00	-AH12*	12" ABS nipple with adjustable horn*	No Add	No Add
-3	Rear anchor support (MC-10-3-PRSFK)	Standard	N/A	-CI-4	4" rolling thread cast iron nipple	No Add	No Add
-10	Auxiliary support, recommended with nipple lengths over 12" (MC-10-AFS)	$ 1121.00	$ 2242.00	-CI-6	6" rolling thread cast iron nipple	No Add	No Add
				-CI-8	8" rolling thread cast iron nipple	137.00	274.00
-12	12" tapered thread ABS nipple*	No Add	No Add	-CI-12*	12" rolling thread cast iron nipple*	$ 395.00	$ 790.00
-13	All galvanized	$ 1064.00	$ 2128.00	-CI-24	24" rolling thread cast iron nipple (MC-10-PN24R-50)	$ No Add	$ No Add
-14	Vandal proof finished trim (MC-10-PFH-14)	$ 182.00	$ 364.00	-HD-750	750 lb rated heavy duty	$ 2378.00	$ 4057.00
-17	Test plug for custom cast iron nipples	$ 80.00	$ 160.00	-HDX	1,000 lb. rated extra heavy duty	$ 4148.00	$ 8161.00
-19	Nipple wrench (MC-10-PCW)	$ 142.00	$ 142.00	-OR8	8" rolling thread ABS nipple	No Add	No Add
-20	Flush valve support (MC-10-FVS)	$ 119.00	$ 238.00	-OR12*	12" rolling thread ABS nipple*	No Add	No Add
-22	Less fitting	$ 1974.00	$ 2861.00	-PFAB	Prefabricated carriers	No Add	No Add
-25	2" auxiliary inlet, right side	$ 476.00	$ 476.00				
-26	2" auxiliary inlet, left side	$ 476.00	$ 476.00				

*** H-1167-KA-14 (** Threaded rods for 12" nipples 5/8" x 14") **$64.00 $128.00**

MC-14 FIXED VERTICAL ON-STACK WATER CLOSET CARRIER MC-14

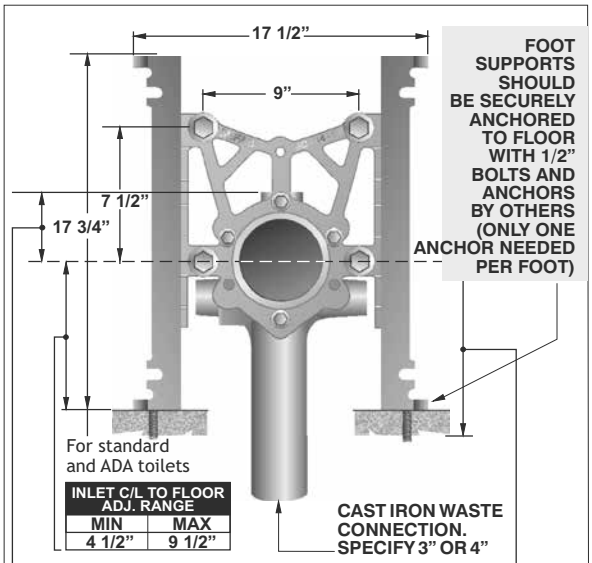

INLET C/L TO FLOOR ADJ. RANGE	
MIN	MAX
4 1/2"	9 1/2"

INLET C/L TO BOTTOM OF FITTING	
MODEL	DIMENSION
MC-14-3-V2	14 1/4" (362)
MC-14-4-V2	17 1/4" (438)
MC-14-4-V4	17 1/4" (438)

INLET C/L TO TOP OF FITTING	
MODEL	DIMENSION
MC-14-3-V2	3 3/4" (95)
MC-14-4-V2	6 1/2" (165)
MC-14-4-V4	4 1/2" (114)

(Dimension) Denotes Millimetres

MC-14

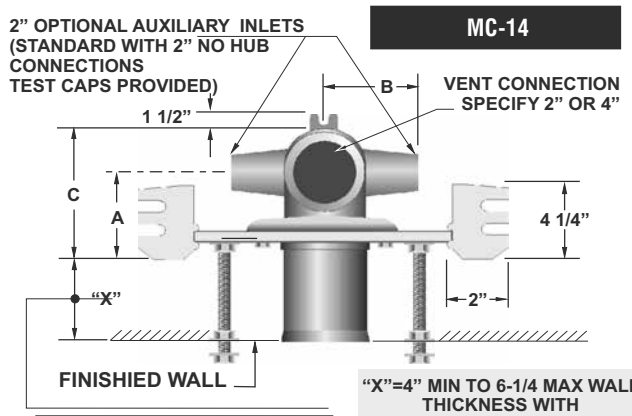

"X"=4" MIN TO 6-1/4 MAX WALL THICKNESS WITH STANDARD NIPPLE. MIN OF 5/8" POSSIBLE WITH SHORTENED NIPPLE

TC-2-50 Test Cap to cover side inlets.

Note: Rear anchor support is included with every single carrier.

MODEL NUMBER	A	B	C
MC-14-3-V2	4 3/4" (89)	5 1/2" (140)	5 7/8" (125)
MC-14-4-V2	4 7/8" (100)	5 1/2" (140)	7" (156)
MC-14-4-V4	4 7/8" (100)	5 1/2" (140)	7" (156)

MC-14-3-V2 3" waste with 2" vent
MC-14-4-V2 4" waste with 2" vent
MC-14-4-V4 4" waste with 4" vent

Note: 8" tapered thread ABS nipple shipped standard with MC-14 Series carriers. The universal faceplate assembly accepts all nipple variations, rolling thread (-OR), cast iron (-CI) and tapered thread ABS with adjustable horn (-AH). (See page 224).

*MC-14 is tested to support a 500 lb. load with the rear anchor support.

MC-14 SERIES

MODEL NO.	DESCRIPTION	WEIGHT (Lbs.)	LIST PRICE
MC-14-3-V2	3" No-Hub Single - with 2" vent	62.00	$ 1859.00
MC-14-4-V2	4" No-Hub Single - with 2" vent	70.00	$ 1859.00
MC-14-4-V4	4" No-Hub Single - with 4" vent	70.00	$ 1859.00

MC-14 OPTIONAL VARIATIONS:

SUFFIX	DESCRIPTION	LIS T PRICE	SUFFIX	DESCRIPTION	LIST PRICE
-01	Neoprene bowl gasket (MC-10-PBG)	$ 81.00	-31	Two 2" Auxiliary inlets	$ 943.00
-1	Finishing / Tiling Frame (MC-10-1-PTFK)	$ 112.00	-AH8	8" ABS nipple with adjustable horn (MC-10-PN8AH-31)	No Add
-3	Rear anchor support (MC-10-3-PRSFK)	Standard	-AH12*	12" ABS nipple with adjustable horn* (MC-10-PN12AH-31)	No Add
-10	Auxiliary support, recommended with nipple lengths over 12"(MC-10-AFS)	$ 1121.00	-CI-4	4" rolling thread cast iron nipple (MC-10-PN4R-50)	No Add
			-CI-6	6" rolling thread cast iron nipple (MC-10-PN6R-50)	No Add
-12	12" tapered thread ABS nipple* (MC-10-PN12-31)	No Add	-CI-8	8" rolling thread cast iron nipple (MC-10-PN8R-50)	No Add
-13	All galvanized	$ 1658.00	-CI-12*	12" rolling thread cast iron nipple* (MC-10-PN12R-50)	$ 137.00
-14	Vandal proof finish trim (MC-10-PFH-14)	$ 182.00	-CI-24	24" rolling thread cast iron nipple (MC-10-PN24R-50)	$ 395.00
-17	Test plug for cast iron nipples	$ 80.00	-FM	Floor mount back outlet fixture support	No Add
-19	Nipple wrench (MC-10-PCW)	$ 142.00	-HD-750	750 lb. rated heavy duty	$ 2378.00
-20	Flush valve support (MC-10-FVS)	$ 119.00	-HDX	1,000 lb. rated extra heavy duty	$ 4148.00
-22	Less Fitting	$ 920.00	-OR8	8" rolling thread ABS nipple (MC-10-PN8R-31)	No Add
-25	2" Auxiliary inlet, right side	$ 476.00	-OR12*	12" rolling thread ABS nipple (MC-10-PN12R-31)	No Add
-26	2" Auxiliary inlet, left side	$ 476.00	-PFAB	Prefabricated carriers	No Add

* **H-1167-KA-14** (Threaded rods for 12" nipples 5/8" x 14") $ 64.00

Design and dimensions are subject to modification. Prices do not include applicable taxes. Visit **www.mifab.com** for the most recent product information.
MIFAB®, Inc., 1321 West 119th Street, Chicago, Illinois 60643-5109, USA Toll Free: 1-800-465-2736 • Fax: 1-773-341-3049
All sales subject to MIFAB's® Terms & Warranties. Please refer to inside front cover. sales@mifab.com • Canada Toll Free: 1-800-387-3880

MC-14-HS FIXED VERTICAL HUB AND SPIGOT ON-STACK WATER CLOSET CARRIER MC-14-HS

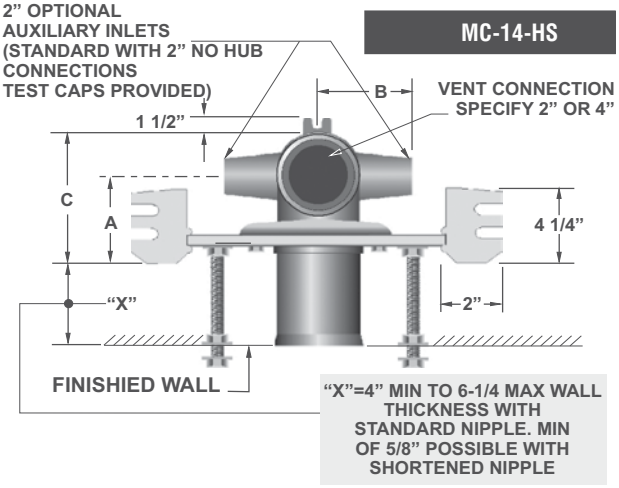

MODEL NUMBER	A	B	C
MC-14-4-V2-HS	4 7/8" (100)	5 1/2" (140)	7" (156)

MC-14-4-V2-HS 4" waste with 2" vent

Note: Rear anchor support is included with every single carrier.

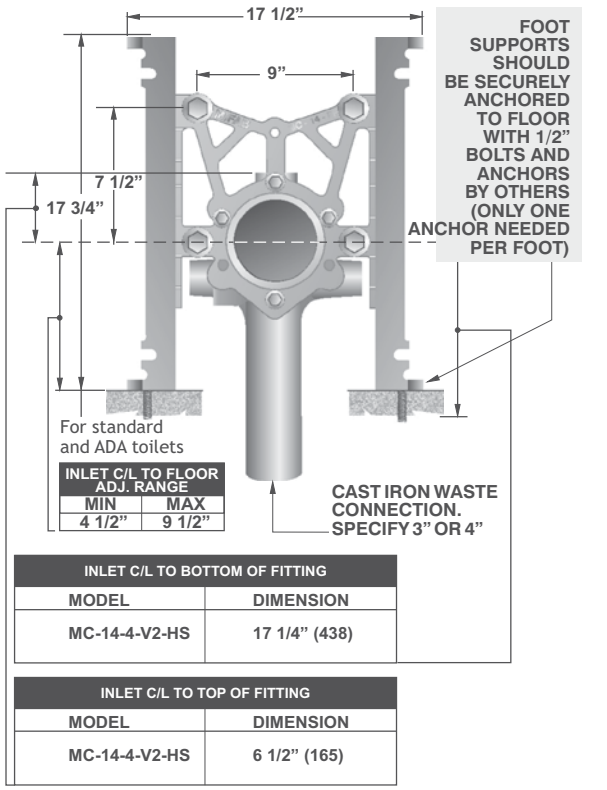

INLET C/L TO FLOOR ADJ. RANGE	
MIN	MAX
4 1/2"	9 1/2"

INLET C/L TO BOTTOM OF FITTING	
MODEL	DIMENSION
MC-14-4-V2-HS	17 1/4" (438)

INLET C/L TO TOP OF FITTING	
MODEL	DIMENSION
MC-14-4-V2-HS	6 1/2" (165)

(Dimension) Denotes Millimetres

Note: 8" tapered thread ABS nipple shipped standard with MC-14 Series carriers. The universal faceplate assembly accepts all nipple variations, rolling thread (-OR), cast iron (-CI) and tapered thread ABS with adjustable horn (-AH). (See page 224).

MC-14-HS SERIES			
MODEL NO.	DESCRIPTION	WEIGHT (Lbs.)	LIST PRICE
MC-14-4-V2-HS	4" No-Hub Single - with 2" vent	70.00	$ 1908.00

*MC-14-HS is tested to support a 500 lb. load with the rear anchor support.

MC-14-HS OPTIONAL VARIATIONS:

SUFFIX	DESCRIPTION	LIST PRICE	SUFFIX	DESCRIPTION	LIST PRICE
-01	Neoprene bowl gasket (MC-10-PBG)	$ 81.00	-31	Two 2" Auxiliary inlets	$ 943.00
-1	Finishing / Tiling Frame (MC-10-1-PTFK)	$ 112.00	-AH8	8" ABS nipple with adjustable horn (MC-10-PN8AH-31)	No Add
-3	Rear anchor support (MC-10-3-PRSFK)	Standard	-AH12*	12" ABS nipple with adjustable horn* (MC-10-PN12AH-31)	No Add
-10	Auxiliary support, recommended with nipple lengths over 12"(MC-10-AFS)	$1121.00	-CI-4	4" rolling thread cast iron nipple (MC-10-PN4R-50)	No Add
			-CI-6	6" rolling thread cast iron nipple (MC-10-PN6R-50)	No Add
-12	12" tapered thread ABS nipple* (MC-10-PN12-31)	No Add	-CI-8	8" rolling thread cast iron nipple (MC-10-PN8R-50)	No Add
-13	All galvanized	$1658.00	-CI-12*	12" rolling thread cast iron nipple* (MC-10-PN12R-50)	$ 137.00
-14	Vandal proof finish trim (MC-10-PFH-14)	$ 182.00	-CI-24	24" rolling thread cast iron nipple (MC-10-PN24R-50)	$ 395.00
-17	Test plug for cast iron nipples	$ 80.00	-FM	Floor mount back outlet fixture support	No Add
-19	Nipple wrench (MC-10-PCW)	$ 142.00	-HD-750	750 lb. rated heavy duty	$ 2378.00
-20	Flush valve support (MC-10-FVS)	$ 119.00	-HDX	1,000 lb. rated extra heavy duty	$ 4148.00
-22	Less Fitting	$ 969.00	-OR8	8" rolling thread ABS nipple (MC-10-PN8R-31)	No Add
-25	2" Auxiliary inlet, right side	$ 476.00	-OR12*	12" rolling thread ABS nipple (MC-10-PN12R-31)	No Add
-26	2" Auxiliary inlet, left side	$ 476.00	-PFAB	Prefabricated carriers	No Add

* **H-1167-KA-14** (Threaded rods for 12" nipples 5/8" x 14") $ 64.00

MC-15 FIXED VERTICAL WATER CLOSET CARRIER OFFSET FROM STACK MC-15

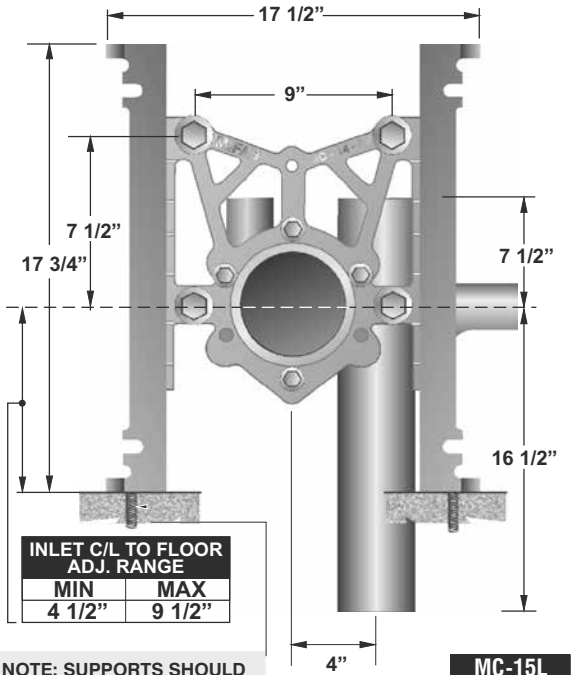

INLET C/L TO FLOOR ADJ. RANGE	
MIN	MAX
4 1/2”	9 1/2”

NOTE: SUPPORTS SHOULD BE SECURELY ANCHORED TO THE FLOOR WITH ½” BOLTS AND ANCHORS BY OTHERS (ONLY ONE ANCHOR NEEDED PER FOOT)

MC-15L Illustrated

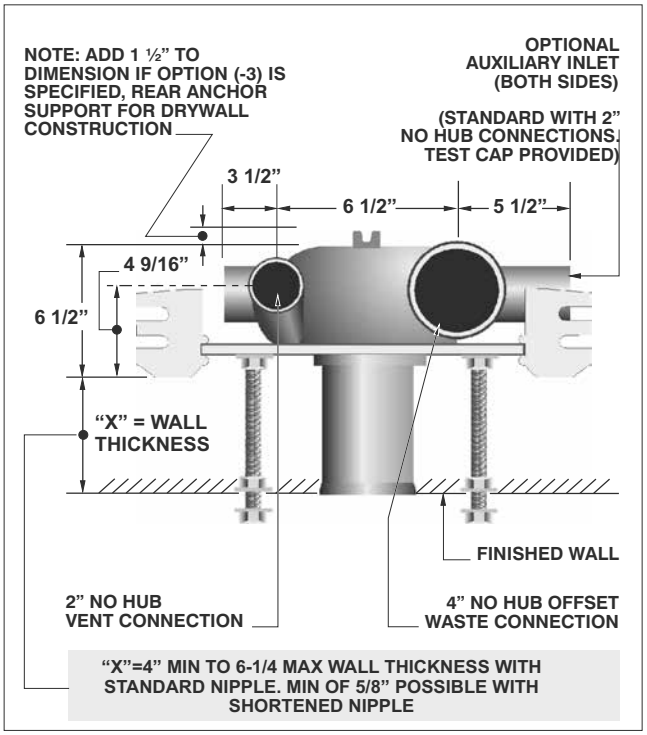

*MC-15 is tested to support a 500 lb. load with the rear anchor support.

Note: 8” tapered thread ABS nipple shipped standard with MC-15 Series carriers. The universal faceplate assembly accepts all nipple variations, rolling thread (-OR), cast iron (-CI) and tapered thread ABS with adjustable horn (-AH). (See page 224).

Note: Rear anchor support is included with every single carrier.

MC-15D

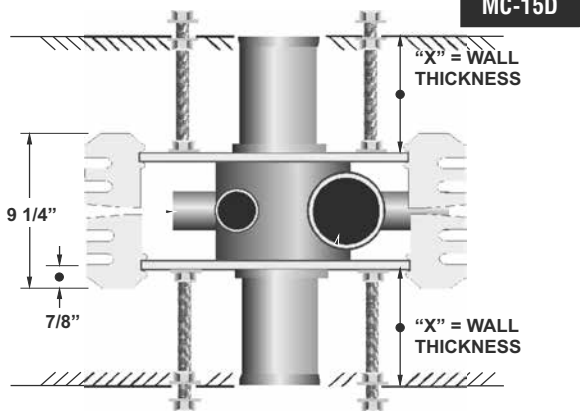

MC-15			
MODEL NO.	DESCRIPTION	WEIGHT (Lbs.)	LIST PRICE
MC-15L	Single left hand offset	77.00	$ 1842.00
MC-15R	Single right hand offset	77.00	$ 1842.00
MC-15D	Double - back to back offset	116.00	$ 3162.00

MC-15 OPTIONAL VARIATIONS:

SUFFIX	DESCRIPTION	LIST PRICE SINGLE	LIST PRICE DOUBLE	SUFFIX	DESCRIPTION	LIST PRICE SINGLE	LIST PRICE DOUBLE
-01	Neoprene bowl gasket (MC-10-PBG)	$ 81.00	$ 162.00	-31	Two 2” auxiliary inlets	$ 943.00	$ 943.00
-1	Finishing / Tiling frame (MC-10-1-PTFK)	$ 112.00	$ 224.00	-AH8	8” ABS nipple with adjustable horn	No Add	No Add
-3	Rear anchor support (MC-10-3-PRSFK)	Standard	N/A	*AH12	12” ABS nipple with adjustable horn*	No Add	No Add
-10	Auxiliary support, recommended with nipple lengths over 12” (MC-10-AFS)	$ 1121.00	$ 2242.00	-CI-4	4” rolling thread cast iron nipple	No Add	No Add
				-CI-6	6” rolling thread cast iron nipple	No Add	No Add
-12	12” tapered thread ABS nipple*	No Add	No Add	-CI-8	8” rolling thread cast iron nipple	$ 137.00	$ 274.00
-13	All galvanized	$ 1064.00	$ 2128.00	-CI-12*	12” rolling thread cast iron nipple*	$ 395.00	$ 790.00
-14	Vandal proof finished trim (MC-10-PFH-14)	$ 182.00	$ 364.00	-CI-24	24” rolling thread cast iron nipple (MC-10-PN24R-50)	No Add	No Add
-17	Test plug for custom cast iron nipples	$ 80.00	$ 160.00	-FM	Floor mount back outlet fixture support	$ 2378.00	$ 4057.00
-19	Nipple wrench (MC-10-PCW)	$ 142.00	$ 142.00	-HD-750	750 lb rated heavy duty	$ 4148.00	$ 8161.00
-20	Flush valve support (MC-10-FVS)	$ 119.00	$ 238.00	HDX	1,000 lb. rated extra heavy duty	No Add	No Add
-22	Less fitting	$ 903.00	$ 1284.00	-OR8	8” rolling thread ABS nipple	No Add	No Add
-25	2” auxiliary inlet, right side	$ 476.00	$ 476.00	*OR12	12” rolling thread ABS nipple*	No Add	No Add
-26	2” auxiliary inlet, left side	$ 476.00	$ 476.00	-PFAB	Prefabricated carriers		

* H-1167-KA-14 (Threaded rods for 12" nipples 5/8" x 14") $64.00 $128.00

FIXTURE CARRIERS

Design and dimensions are subject to modification. Prices do not include applicable taxes. Visit www.mifab.com for the most recent product information.
MIFAB®, Inc., 1321 West 119th Street, Chicago, Illinois 60643-5109, USA Toll Free: 1-800-465-2736 • Fax: 1-773-341-3049
All sales subject to MIFAB's® Terms & Warranties. Please refer to inside front cover. sales@mifab.com • Canada Toll Free: 1-800-387-3880

MC-15-HS FIXED VERTICAL HUB AND SPIGOT WATER CLOSET CARRIER OFFSET FROM STACK MC-15-HS

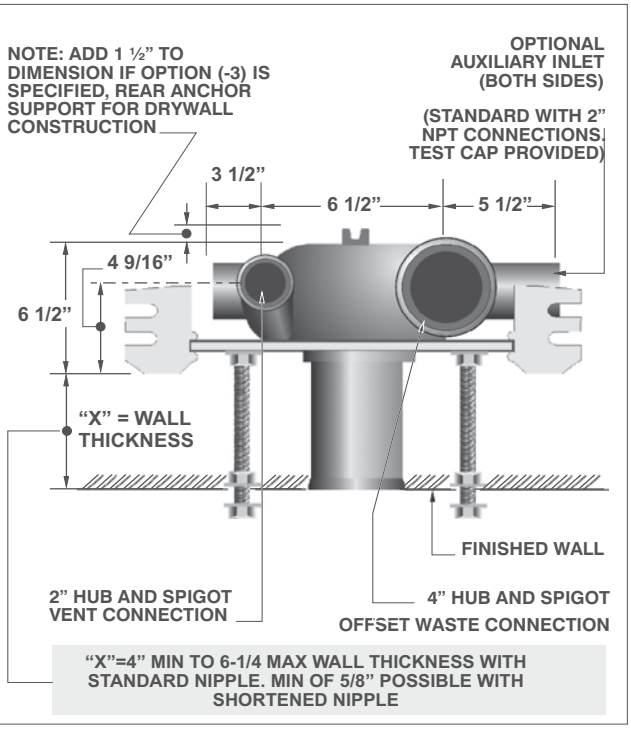

*MC-15-HS is tested to support a 500 lb. load with the rear anchor support.

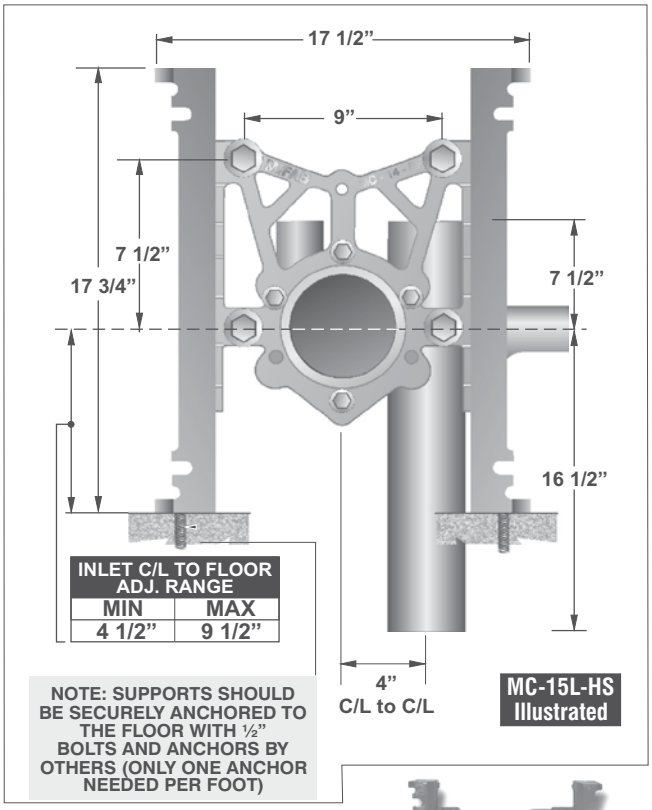

INLET C/L TO FLOOR ADJ. RANGE	
MIN	MAX
4 1/2"	9 1/2"

Note: Rear anchor support is included with every single carrier.

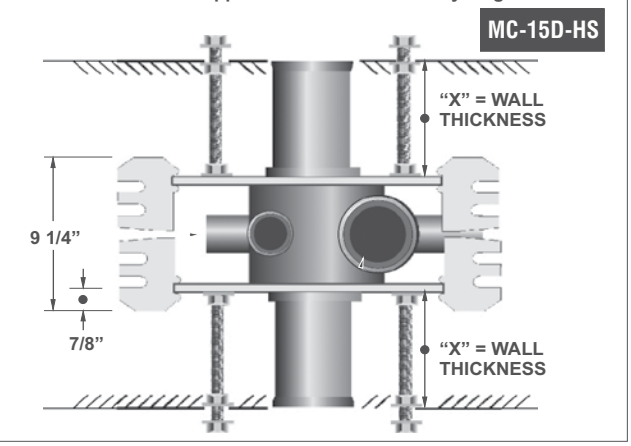

Note: 8" tapered thread ABS nipple shipped standard with MC-15 Series carriers. The universal faceplate assembly accepts all nipple variations, rolling thread (-OR), cast iron (-CI) and tapered thread ABS with adjustable horn (-AH). (See page 224).

MC-15-HS			
MODEL NO.	DESCRIPTION	WEIGHT (Lbs.)	LIST PRICE
MC-15L-HS	Single left hand offset	77.00	$ 1908.00
MC-15R-HS	Single right hand offset	77.00	$ 1908.00
MC-15D-HS	Double - back to back offset	116.00	$ 3289.00

MC-15-HS OPTIONAL VARIATIONS:

SUFFIX	DESCRIPTION	LIST PRICE SINGLE	LIST PRICE DOUBLE	SUFFIX	DESCRIPTION	LIST PRICE SINGLE	LIST PRICE DOUBLE
-01	Neoprene bowl gasket (MC-10-PBG)	$ 81.00	$ 162.00	-31	Two 2" auxiliary inlets	$ 943.00	$ 943.00
-1	Finishing / Tiling frame (MC-10-1-PTFK)	$ 112.00	$ 224.00	-AH8	8" ABS nipple with adjustable horn	No Add	No Add
-3	Rear anchor support (MC-10-3-PRSFK)	Standard	N/A	*AH12	12" ABS nipple with adjustable horn*	No Add	No Add
-10	Auxiliary support, recommended with nipple lengths over 12" (MC-10-AFS)	$ 1121.00	$ 2242.00	-CI-4	4" rolling thread cast iron nipple	No Add	No Add
				-CI-6	6" rolling thread cast iron nipple	No Add	No Add
-12	12" tapered thread ABS nipple*	No Add	No Add	-CI-8	8" rolling thread cast iron nipple	137.00	274.00
-13	All galvanized	$ 1064.00	$ 2128.00	-CI-12*	12" rolling thread cast iron nipple*	$ 395.00	$ 790.00
-14	Vandal proof finished trim (MC-10-PFH-14)	$ 182.00	$ 364.00	-CI-24	24" rolling thread cast iron nipple (MC-10-PN24R-50)	$ No Add	$ No Add
-17	Test plug for custom cast iron nipples	$ 80.00	$ 160.00	-FM	Floor mount back outlet fixture support	2378.00	4057.00
-19	Nipple wrench (MC-10-PCW)	$ 142.00	$ 142.00	-HD-750	750 lb rated heavy duty	$ 4148.00	$ 8161.00
-20	Flush valve support (MC-10-FVS)	$ 119.00	$ 238.00	-HDX	1,000 lb. rated extra heavy duty	$ No Add	$ No Add
-22	Less fitting	$ 969.00	$ 1411.00	-OR8	8" rolling thread ABS nipple	No Add	No Add
-25	2" auxiliary inlet, right side	$ 476.00	$ 476.00	*OR12	12" rolling thread ABS nipple*	No Add	No Add
-26	2" auxiliary inlet, left side	$ 476.00	$ 476.00	-PFAB	Prefabricated carriers		

* H-1167-KA-14 (Threaded rods for 12" nipples 5/8" x 14") $64.00 $128.00

MC-21 COMPACT REAR OUTLET WATER CLOSET CARRIER

MC-21

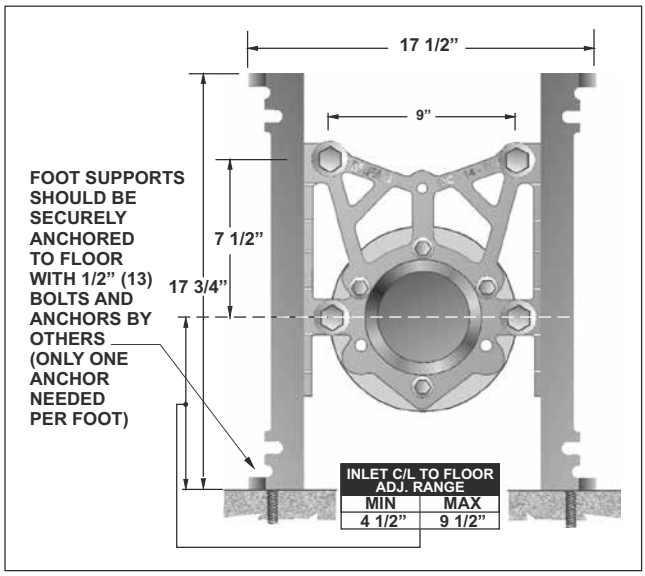

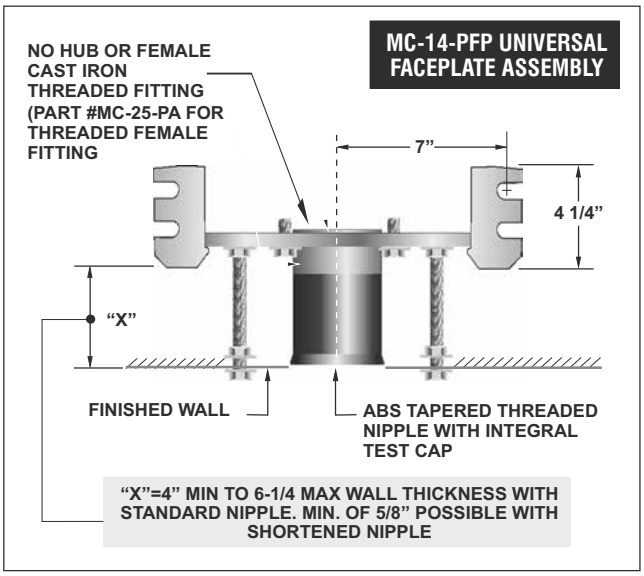

MODEL NO.	WT Lbs.	DESCRIPTION	LIST PRICE
MC-21N	30.00	No hub for siphon jet	$ 1121.00
MC-21T	30.00	Female threaded for siphon jet	$ 1121.00
MC-22N	30.00	No hub for blowout	$ 1121.00
MC-22T	30.00	Female threaded for blowout	$ 1121.00

MC-21 TO MC-22 OPTIONAL VARIATIONS:

SUFFIX	DESCRIPTION	LIST PRICE	SUFFIX	DESCRIPTION	LIST PRICE
-01	Neoprene bowl gasket (MC-10-PBG)	$ 81.00	**-14**	Vandal proof finish trim (MC-10-PFH-14)	$ 182.00
-1	Finishing / Tiling Frame (MC-10-1-PTFK)	$ 112.00	**-17**	Test plug for cast iron nipples	$ 80.00
-10	Auxiliary foot support, recommended with nipple Lengths over 12" (MC-10-AFS)	$ 1121.00	**-19**	Nipple wrench (MC-10-PCW)	$ 142.00
			-20	Flush valve support (MC-10-FVS)	$ 119.00
-12	12" tapered thread ABS nipple* (MC-10-PN12-31)		**-AH8**	8" ABS nipple with adjustable horn (MC-10-PN8AH-31)	No Add
-13	All galvanized	$ 1064.00	**-AH12***	12" ABS nipple with adjustable horn* (MC-10-PN12AH-31)	No Add

*** H-1167-KA-14** (Threaded rods for 12" nipples 5/8" x 14") **$ 64.00**

MC-24, MC-25 RESIDENTIAL WATER CLOSET CARRIER

MC-24, MC-25

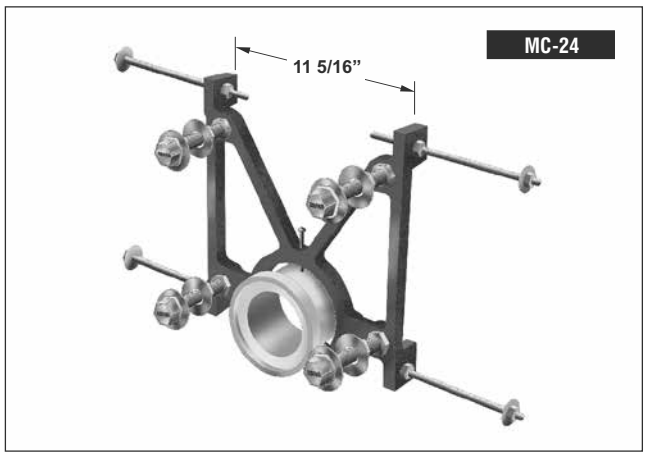

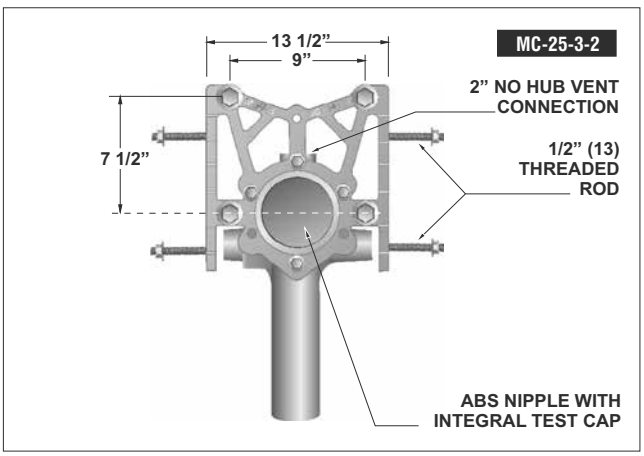

MODEL NO.	WT Lbs.	DESCRIPTION	LIST PRICE
MC-24	25.00	Single carrier with 3” PVC adapter	$ 874.00
MC-24-DC	25.00	Single carrier with foot supports and opening for 4” PVC adapter fitting	$ 874.00
MC-25-3-2	30.00	3” No Hub single with 2” vent for connection to No Hub, PVC, ABS, Copper	$ 1023.00
MC-25-4-2	40.00	4” No Hub single with 2” vent for connection to No Hub, PVC, ABS, Copper	$ 1407.00
MC-25-4-4	40.00	4” No Hub single with 4” vent for connection to No Hub, PVC, ABS, Copper	$ 1456.00
MC-25-4D-RV2	50.00	4” No Hub - back to back	$ 4599.00
MC-25-RV2	40.00	4” No Hub offset with 2” vent	$ 1859.00
Add for:	- -	-29 Foot support system (MC-25 Series only)	$ 469.00

Design and dimensions are subject to modification. Prices do not include applicable taxes. Visit **www.mifab.com** for the most recent product information.
MIFAB®, Inc., 1321 West 119th Street, Chicago, Illinois 60643-5109, USA Toll Free: 1-800-465-2736 • Fax: 1-773-341-3049
All sales subject to MIFAB's® Terms & Warranties. Please refer to inside front cover. sales@mifab.com • Canada Toll Free: 1-800-387-3880

MC-26 SINGLE STACK FITTING FOR FLOOR MOUNTED BACK OUTLET WATER CLOSETS MC-26

MC-26 and MC-27 OPTIONAL VARIATIONS:

SUFFIX	DESCRIPTION	LIST PRICE MC-26	LIST PRICE MC-27
-01	Neoprene bowl gasket (MC-10-PBG)	$ 81.00	$ 162.00
-1	Finishing / Tiling Frame (MC-10-1-PTFK)	$ 112.00	$ 224.00
-3	Rear anchor support (MC-10-3-PRSFK)	Standard	N/A
-10	Auxiliary support, recommended with nipple lengths over 12" (MC-10-AFS)	$ 1121.00	$ 2242.00
-12	12" tapered thread ABS nipple* (MC-10-PN12-31)	No Add	No Add
-13	All galvanized	$ 1064.00	$ 2128.00
-14	Vandal proof finish trim (MC-10-PFH-14)	$ 182.00	$ 364.00
-17	Test plug for cast iron nipples	$ 80.00	$ 160.00
-19	Nipple wrench (MC-10-PCW)	$ 142.00	$ 142.00
-20	Flush valve support (MC-10-FVS)	$ 119.00	$ 238.00
-31	Two 2" NH vent connections	$ 943.00	$ 1591.00
-AH8	8" ABS nipple with adjustable horn (MC-10-PN8AH-31)	No Add	No Add
-AH12*	12" ABS nipple with adjustable horn* (MC-10-PN12AH-31)	No Add	No Add
-CI-4	4" rolling thread cast iron nipple (MC-10-PN4R-50)	No Add	No Add
-CI-6	6" rolling thread cast iron nipple (MC-10-PN6R-50)	No Add	No Add
-CI-8	8" rolling thread cast iron nipple (MC-10-PN8R-50)	No Add	No Add
-CI-12*	12" rolling thread cast iron nipple* (MC-10-PN12R-50)	$ 137.00	$ 274.00
-CI-24	24" rolling thread cast iron nipple (MC-10-PN24R-50)	$ 395.00	$ 790.00
-HD-750	750 lb. rated heavy duty	$ 2378.00	$ 4057.00
-OR8	8" rolling thread ABS nipple (MC-10-PN8R-31)	No Add	No Add
-OR12*	12" rolling thread ABS nipple (MC-10-PN12R-31)	No Add	No Add

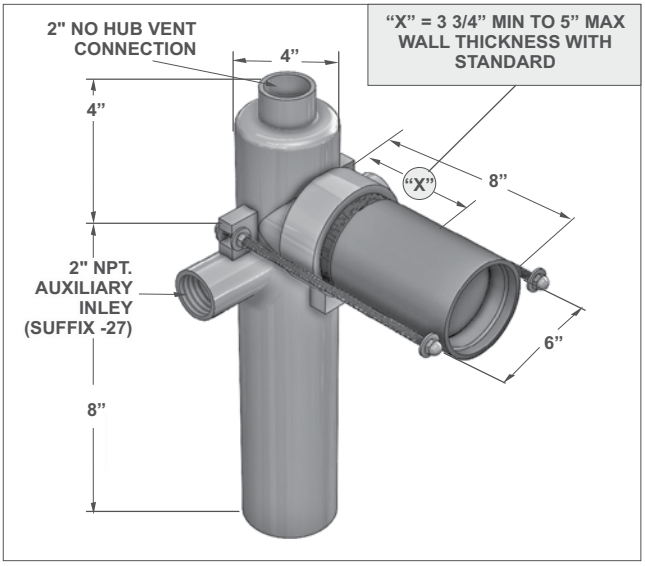

MODEL NO.	WT Lbs.	DESCRIPTION	LIST PRICE
MC-26	28.00	4" Single fitting with 2" vent	$ 1894.00

MC-27 90⁰ DOUBLE STACK FITTING FOR FLOOR MOUNTED BACK OUTLET WATER CLOSETS MC-27

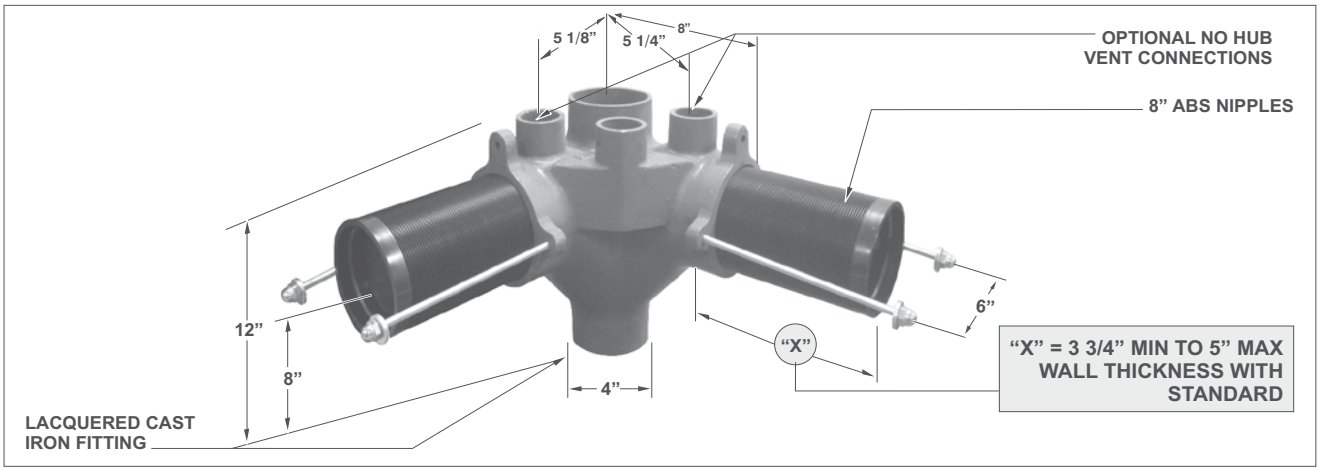

MODEL NO.	WT Lbs.	DESCRIPTION	LIST PRICE
MC-27	46.00	Double fitting for back outlet, floor mounted closet	$ 5606.00

MC-28 90 DOUBLE NO-HUB STACK FITTING FOR FLOOR MOUNTED BACK OUTLET WATER CLOSETS MC-28

MODEL NO.	WT Lbs.	DESCRIPTION	LIST PRICE
MC-28	46.00	4" Pipe size 90 Double fitting with 2" center vent	$ 2134.00

MC-28 OPTIONAL VARIATIONS:

SUFFIX	DESCRIPTION	LIST PRICE
-13	All galvanized	$ 1053.00
-23	45° Auxiliary inlet	$ 476.00
-32	No hub nipple w/4" cleanout for penal fixtures	$ 1996.00

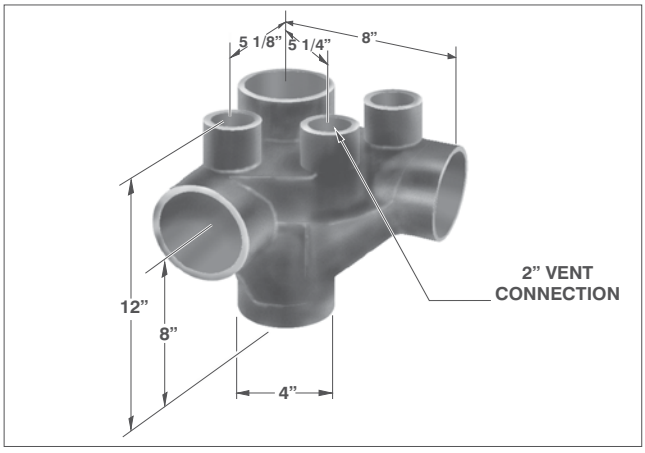

MC-31 SINGLE HANGER PLATE CARRIER WITH TWO UPRIGHTS MC-31

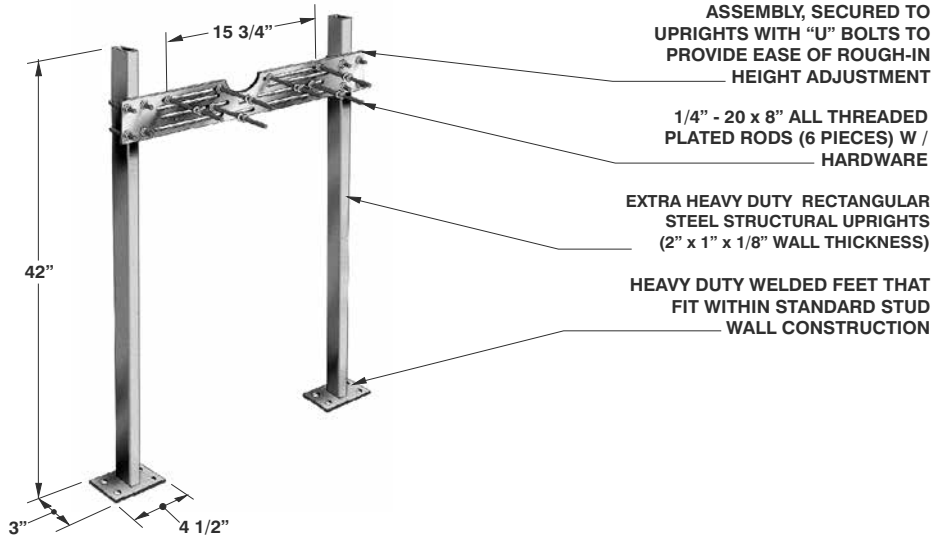

NOTE: Foot supports should be securely anchored to floor with ½" bolts and anchors by others

MODEL NO.	WT Lbs.	DESCRIPTION	LIST PRICE
MC-31	22.00	Single hanger plate - two uprights	$ 977.00
MC-31-HDH	25.00	Single hanger plate with heavy duty hanger	$ 1765.00
MC-31D	28.00	Single hanger plate - back to back	$ 1292.00
MC-31-C	60.00	Two hanger plates - three uprights for corner mounted lavatory	$ 1675.00

MC-31 OPTIONAL VARIATIONS:

SUFFIX	DESCRIPTION	LIST PRICE	SUFFIX	DESCRIPTION	LIST PRICE
-A	Stud length over 8" (specify), Add per inch	$ 71.50	**-PFAB**	Prefabricated carrier bank (per carrier)	$ 337.00
-B	Floor to ceiling upright	$ 1305.00	**-20**	Flush valve support (MC-10-FVS)	$ 119.00

MC-32 DOUBLE PLATE TYPE CARRIER SYSTEM WITH 2 UPRIGHTS MC-32

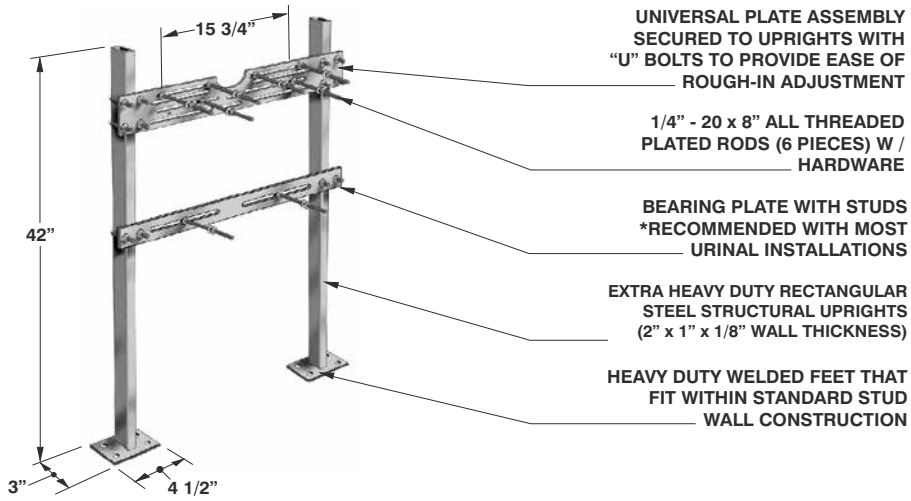

NOTE: Foot supports should be securely anchored to floor with ½" bolts and anchors by others

MODEL NO.	WT Lbs.	DESCRIPTION	LIST PRICE
MC-32	27.00	With bearing plate and studs	$ 1092.00
MC-32D	29.00	With bearing plate - back to back	$ 1520.00

MC-32 OPTIONAL VARIATIONS:

SUFFIX	DESCRIPTION	LIST PRICE	SUFFIX	DESCRIPTION	LIST PRICE
-A	Stud length over 8" (specify), Add per inch	$ 71.50	**-PFAB**	Prefabricated carrier bank (per carrier)	$ 337.00
-B	Floor to ceiling upright	$ 1305.00	**-20**	Flush valve support (MC-10-FVS)	$ 119.00

Design and dimensions are subject to modification. Prices do not include applicable taxes. Visit **www.mifab.com** for the most recent product information.
MIFAB®, Inc., 1321 West 119th Street, Chicago, Illinois 60643-5109, USA Toll Free: 1-800-465-2736 • Fax: 1-773-341-3049
All sales subject to MIFAB's® Terms & Warranties. Please refer to inside front cover. sales@mifab.com • Canada Toll Free: 1-800-387-3880

MC-33 TWO HANGER PLATE CARRIER WITH THREE UPRIGHTS MC-33

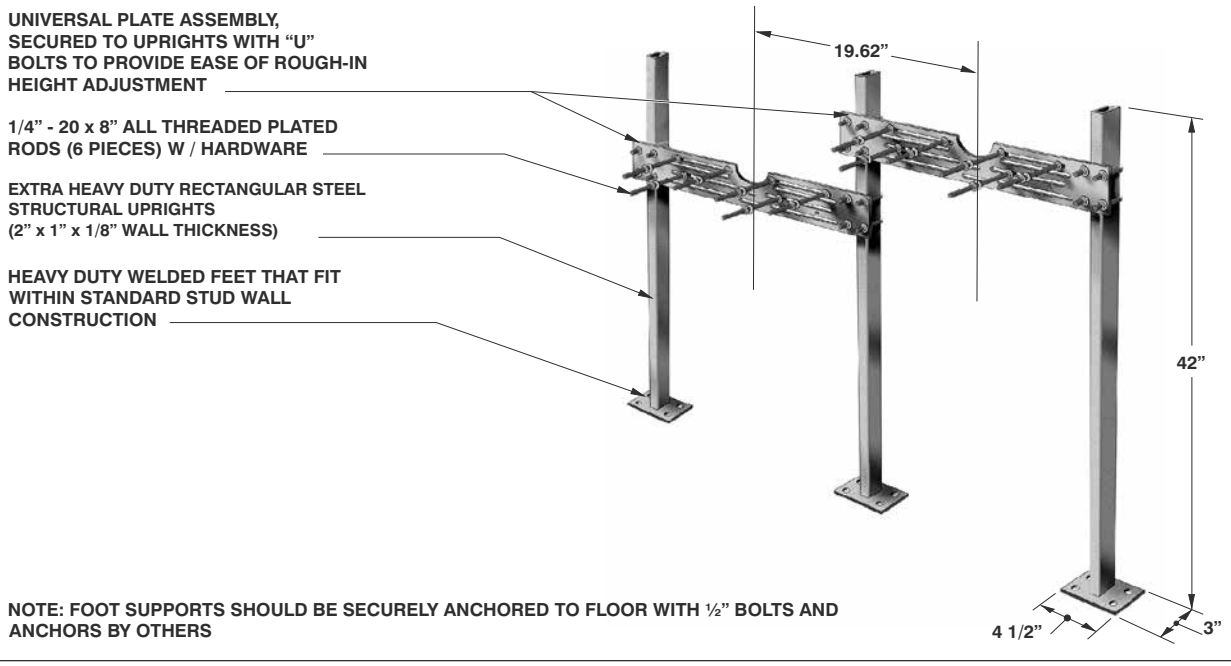

NOTE: FOOT SUPPORTS SHOULD BE SECURELY ANCHORED TO FLOOR WITH ½" BOLTS AND ANCHORS BY OTHERS

MODEL NO.	WT Lbs.	DESCRIPTION	LIST PRICE
MC-33	38.00	Two hanger plates, three uprights	$ 1533.00
MC-33-2	40.00	Two hanger plates, three uprights and two bottom bearing plates	$ 1658.00

MC-33 OPTIONAL VARIATIONS:

SUFFIX	DESCRIPTION	LIST PRICE	SUFFIX	DESCRIPTION	LIST PRICE
-A	Stud length over 8" (specify), Add per inch	$ 71.50	-PFAB	Prefabricated carrier bank (per carrier)	$ 337.00
			-Z	Add per each foot over 42" of upright	$ 506.00

MC-34 SINGLE HANGER PLATE CARRIER WITH EXPOSED ARMS MC-34

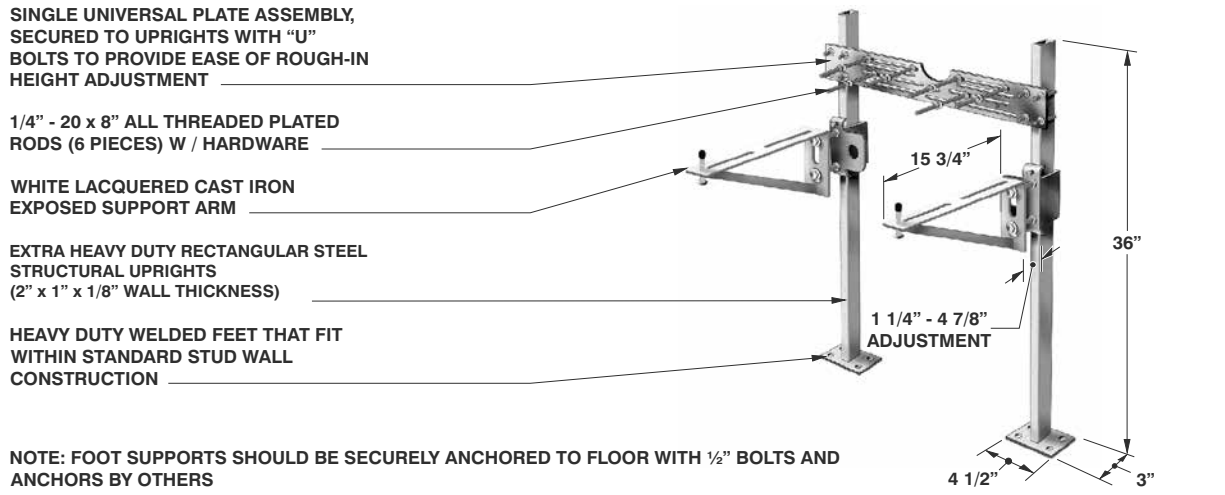

NOTE: FOOT SUPPORTS SHOULD BE SECURELY ANCHORED TO FLOOR WITH ½" BOLTS AND ANCHORS BY OTHERS

MODEL NO.	WT Lbs.	DESCRIPTION	LIST PRICE
MC-34	68.00	Hanger plate with exposed arms	$ 3497.00
MC-34D	70.00	Back to back hanger plate with exposed arms (Note: option prices are double for MC-34D)	$ 3720.00

MC-34 OPTIONAL VARIATIONS:

SUFFIX	DESCRIPTION	LIST PRICE	SUFFIX	DESCRIPTION	LIST PRICE
-A	Stud length over 8" (specify), Add per inch	$ 71.50	-Z	Add per each foot over 42" of upright	$ 506.00
-G	Wall support plate (MC-31-PUP)	$ 199.00	-14	Vandal proof finish trim (MC-10-PFH-14)	$ 182.00
-PFAB	Prefabricated carrier bank (per carrier)	$ 337.00	-88	3/8" Threaded eye bolts for cast iron lavs (H-1208)	$ 199.00

MC-35 HANGER PLATE CARRIER WITH 3 UPRIGHTS AND EXPOSED ARMS MC-35

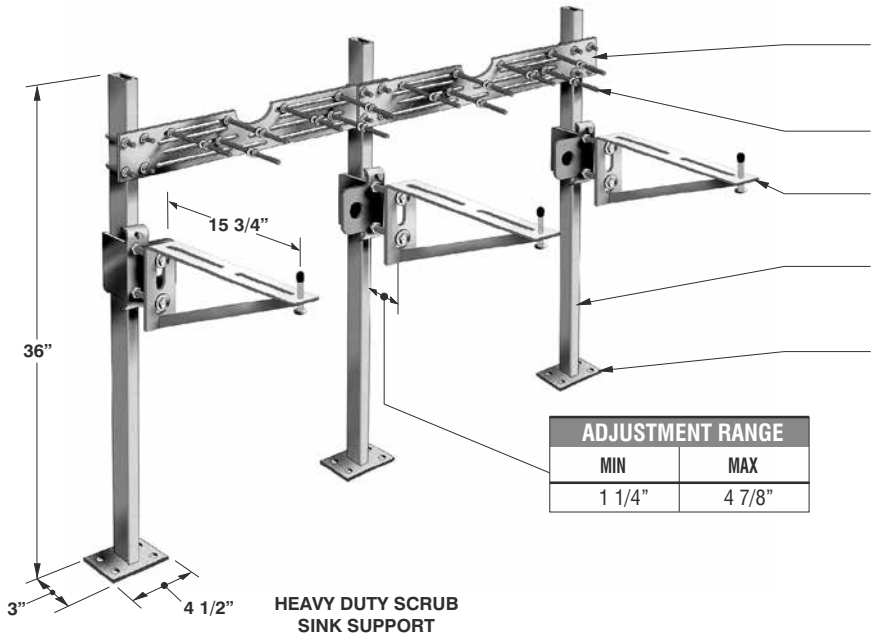

ADJUSTMENT RANGE	
MIN	MAX
1 1/4"	4 7/8"

NOTE: FOOT SUPPORTS SHOULD BE SECURELY ANCHORED TO FLOOR WITH ½" BOLTS AND ANCHORS BY OTHERS

MODEL NO.	WT Lbs.	DESCRIPTION	LIST PRICE
MC-35	102.00	Hanger plates with exposed arms and three uprights	$ 5114.00

MC-35 OPTIONAL VARIATIONS:

SUFFIX	DESCRIPTION	LIST PRICE	SUFFIX	DESCRIPTION	LIST PRICE
-A	Stud length over 8" (specify), Add per inch	$ 143.00	-Z	Add per each foot over 42" of upright	$ 1012.00
-G	Wall support plate (MC-31-PUP)	$ 398.00	-14	Vandal proof finish trim (MC-10-PFH-14)	$ 364.00
-PFAB	Prefabricated carrier bank (per carrier)	$ 674.00	-88	3/8" Threaded eye bolts for cast iron lavs (H-1208)	$ 398.00

MC-36 TO MC-39D WALL SUPPORTED FIXTURE MOUNTING PLATES MC-36 TO MC-39D

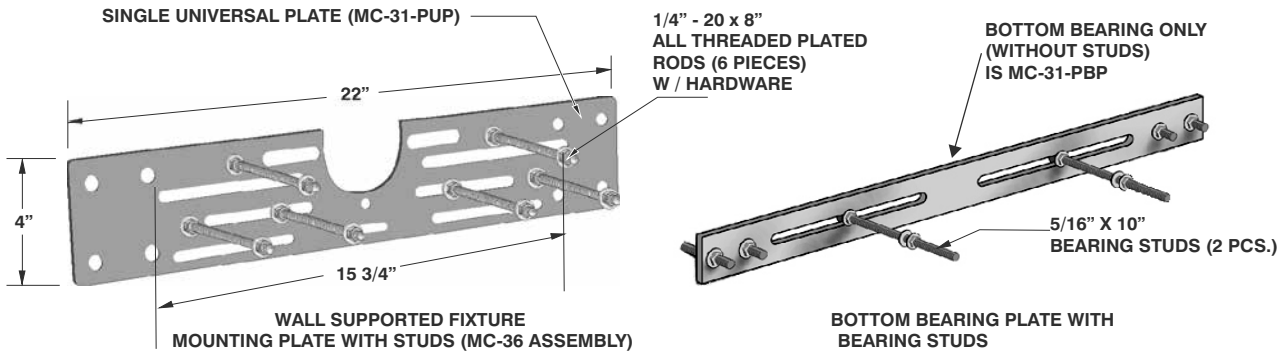

NOTE: Wall supported fixture mounting plates must be securely affixed (with suitable hardware by others) to a wall fully capable of bearing the weight of the plate and fixture.

MODEL NO.	WT Lbs.	DESCRIPTION	LIST PRICE
MC-36	6.00	Top universal plate with studs only	$ 273.00
MC-36-2	24.00	Top universal plate with studs and bottom bearing plate with bearing studs	$ 436.00
MC-37	12.00	Top front and back plates with studs and bottom front and back plates with bearing studs	$ 481.00
MC-38D	15.00	Back to back top front plates with studs only	$ 548.00
MC-39D	24.00	Back to back top front plate with studs and bottom front plate with bearing studs	$ 333.00

Note: Standard studs are 1/4" - 20 x 8" (6pcs) with hardware. Bearing studs are 5/16" x 10" (2pcs) with hardware.

MC-36 TO MC-39D OPTIONAL VARIATIONS:

SUFFIX	DESCRIPTION	LIST PRICE	
		SINGLE	DOUBLE
-A	Stud length over 8" (specify), Add per inch	$ 71.50	$ 143.00

Design and dimensions are subject to modification. Prices do not include applicable taxes. Visit **www.mifab.com** for the most recent product information.
MIFAB®, Inc., 1321 West 119th Street, Chicago, Illinois 60643-5109, USA Toll Free: 1-800-465-2736 • Fax: 1-773-341-3049
All sales subject to MIFAB's® Terms & Warranties. Please refer to inside front cover. sales@mifab.com • Canada Toll Free: 1-800-387-3880

MC-40 FIXTURE CARRIER WITH EXPOSED ARMS MC-40

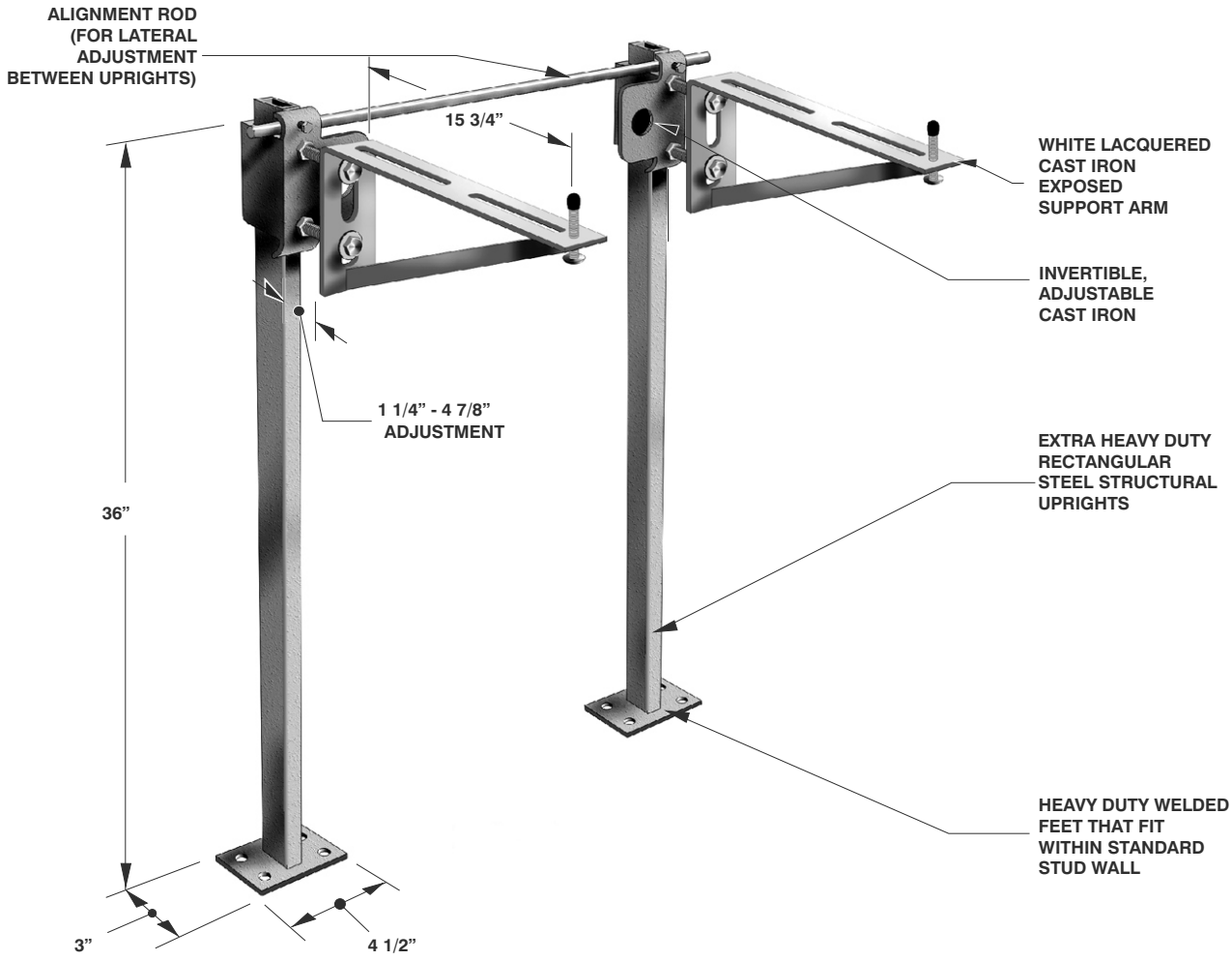

NOTE: foot supports should be securely anchored to floor with ½” bolts and anchors by others

MODEL NO.	WT Lbs.	DESCRIPTION	LIST PRICE
MC-40	36.00	Exposed arms with two vertical uprights	$ 1833.00
MC-40D	55.00	Exposed arms - back to back (Note: option prices are doubled per MC-40D)	$ 2871.00

MC-40 OPTIONAL VARIATIONS:

SUFFIX	DESCRIPTION	LIST PRICE	SUFFIX	DESCRIPTION	LIST PRICE
-A	Stud length over 8" (specify), Add per inch	$ 71.50	**-Z**	Add per each foot over 42" of upright	$ 506.00
-F	Bar support valve plate	$ 199.00	**-14**	Vandal proof finish trim (MC-10-PFH-14)	$ 182.00
-G	Wall support plate (MC-31-PUP)	$ 199.00	**-32**	Foot pedal mounting plate	$ 167.00
-PFAB	Prefabricated carrier bank (per carrier)	$ 337.00	**-88**	3/8" Threaded eye bolts for cast iron lavs (H-1208)	$ 199.00

MC-41 FIXTURE CARRIER WITH CONCEALED ARMS

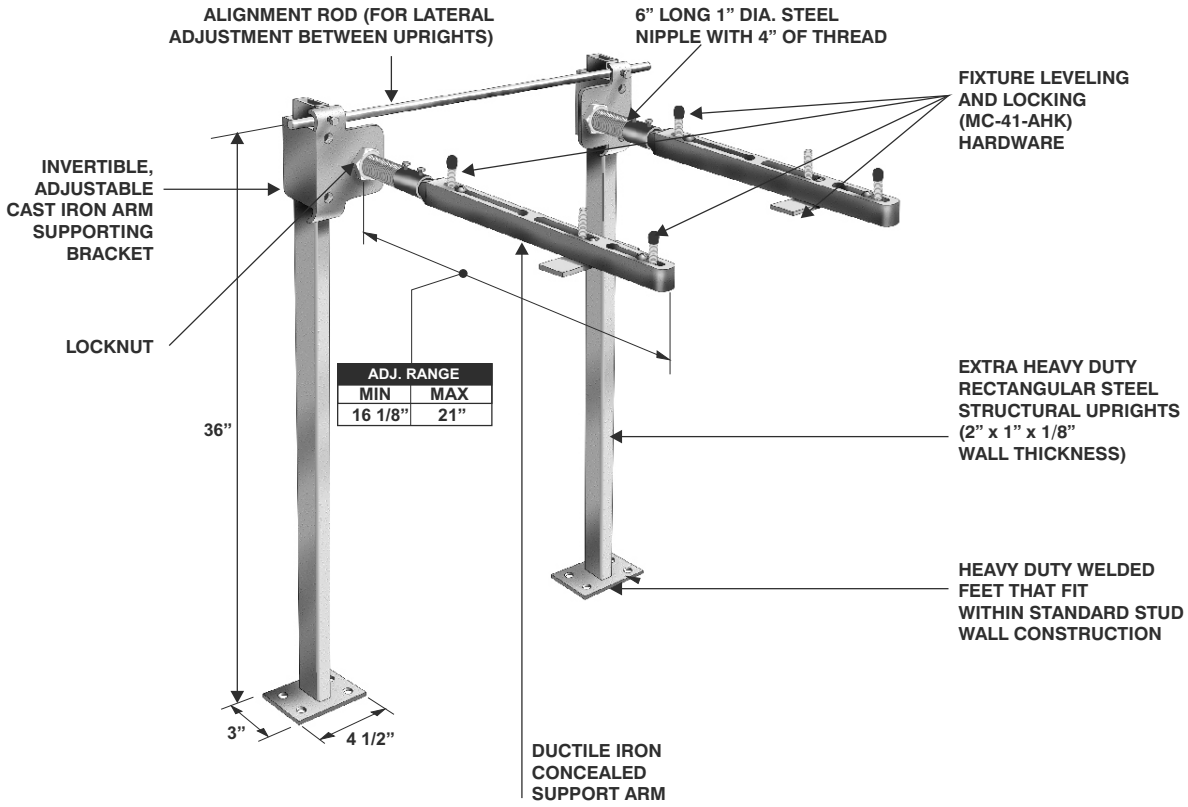

NOTE: Foot supports should be securely anchored to floor with ½" bolts and anchors by others

PLAN VIEW OF MC-40-PHB HEADER BRACKET

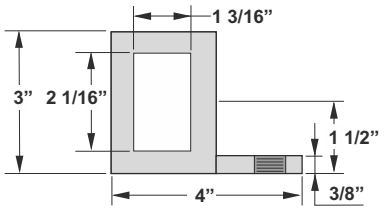

OPTIONAL PAIR OF CHROME PLATED ESCUTCHEONS (2" x 3 3/8") FOR SLAB BACK LAVATORIES:
SUFFIX: -E2 (MC-41-PE2) $ 220.00

PHOTO OF THE MC-41 BOX. IT CONTAINS ALL PARTS TO MAKE THE MC-41

MODEL NO.	WT Lbs.	DESCRIPTION	LIST PRICE
MC-41	28.00	Concealed arms with two vertical uprights	**$ 1292.00**

MC-41 OPTIONAL VARIATIONS:

SUFFIX	DESCRIPTION	LIST PRICE	SUFFIX	DESCRIPTION	LIST PRICE
-A	Add per inch for nipple length over 6"	**$ 71.50**	**-PFAB**	Prefabricated carrier bank (per carrier)	**$ 337.00**
-B	Floor to ceiling upright	**$ 1305.00**	**-XN8**	Extra long 8" nipple	**$ 150.00**
-E2	2" Chrome plated escutcheons (pair) (MC-41-PE2)	**$ 220.00**	**-32**	Foot pedal mounting plate	**$ 167.00**
-G	Wall support plate (MC-31-PUP)	**$ 199.00**	**-88**	3/8" threaded eye bolts for cast iron lavs (H-1208)	**$ 199.00**

Design and dimensions are subject to modification. Prices do not include applicable taxes. Visit **www.mifab.com** for the most recent product information.
MIFAB®, Inc., 1321 West 119th Street, Chicago, Illinois 60643-5109, USA Toll Free: 1-800-465-2736 • Fax: 1-773-341-3049
All sales subject to MIFAB's® Terms & Warranties. Please refer to inside front cover. sales@mifab.com • Canada Toll Free: 1-800-387-3880

MC-41D BACK TO BACK FIXTURE CARRIER WITH CONCEALED ARMS MC-41D

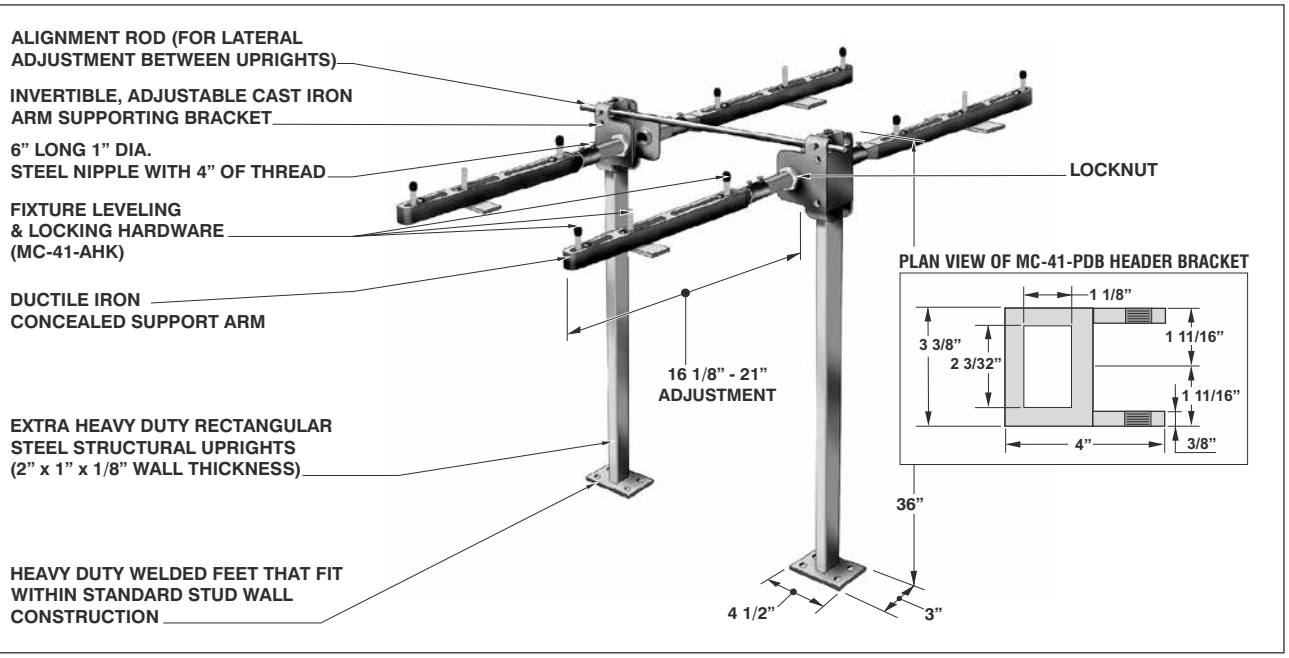

MODEL NO.	WT Lbs.	DESCRIPTION	LIST PRICE
MC-41D	42.00	Concealed arms - back to back	$ 1833.00

MC-41D OPTIONAL VARIATIONS:

SUFFIX	DESCRIPTION	LIST PRICE	SUFFIX	DESCRIPTION	LIST PRICE
-A	Add per inch for nipple length over 6"	$ 143.00	-G	Wall support plate (MC-31-PUP)	$ 398.00
-B	Floor to ceiling upright	$ 1305.00	-PFAB	Prefabricated carrier bank (per carrier)	$ 337.00
-E2	2" Chrome plated escutcheons (pair) (MC-41-PE2)	$ 439.00	-32	Foot pedal mounting plate	$ 167.00
			-88	3/8" threaded eye bolts for cast iron lavs (H-1208)	$ 199.00

MC-41-R FIXTURE CARRIER WITH CONCEALED ARMS AND ROUND UPRIGHTS MC-41-R

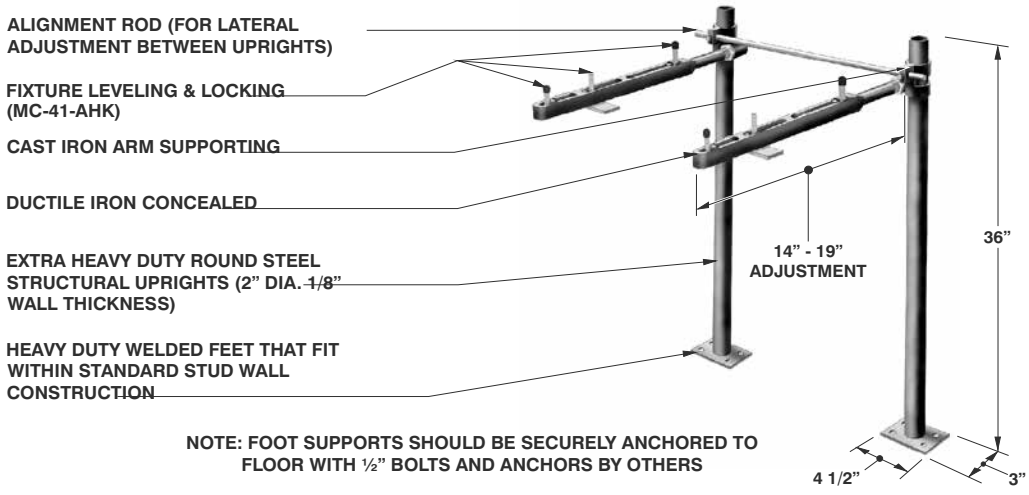

NOTE: FOOT SUPPORTS SHOULD BE SECURELY ANCHORED TO FLOOR WITH ½" BOLTS AND ANCHORS BY OTHERS

MODEL NO.	WT Lbs.	DESCRIPTION	LIST PRICE
MC-41-R	42.00	Concealed arms w/ Round Uprights	$ 1385.00

MC-41-R OPTIONAL VARIATIONS:

SUFFIX	DESCRIPTION	LIST PRICE	SUFFIX	DESCRIPTION	LIST PRICE
-B	Floor to ceiling upright	$ 1305.00	-G	Wall support plate (MC-31-PUP)	$ 199.00
-E2	2" Chrome plated escutcheons (pair) (MC-41-PE2)	$ 220.00	-PFAB	Prefabricated carrier bank (per carrier)	$ 337.00
			-32	Foot pedal mounting plate	$ 167.00
			-88	3/8" threaded eye bolts for cast iron lavs (H-1208)	$ 199.00

MC-41-TR FIXTURE CARRIER WITH CONCEALED ARMS AND MEASURING PLATES MC-41-TR

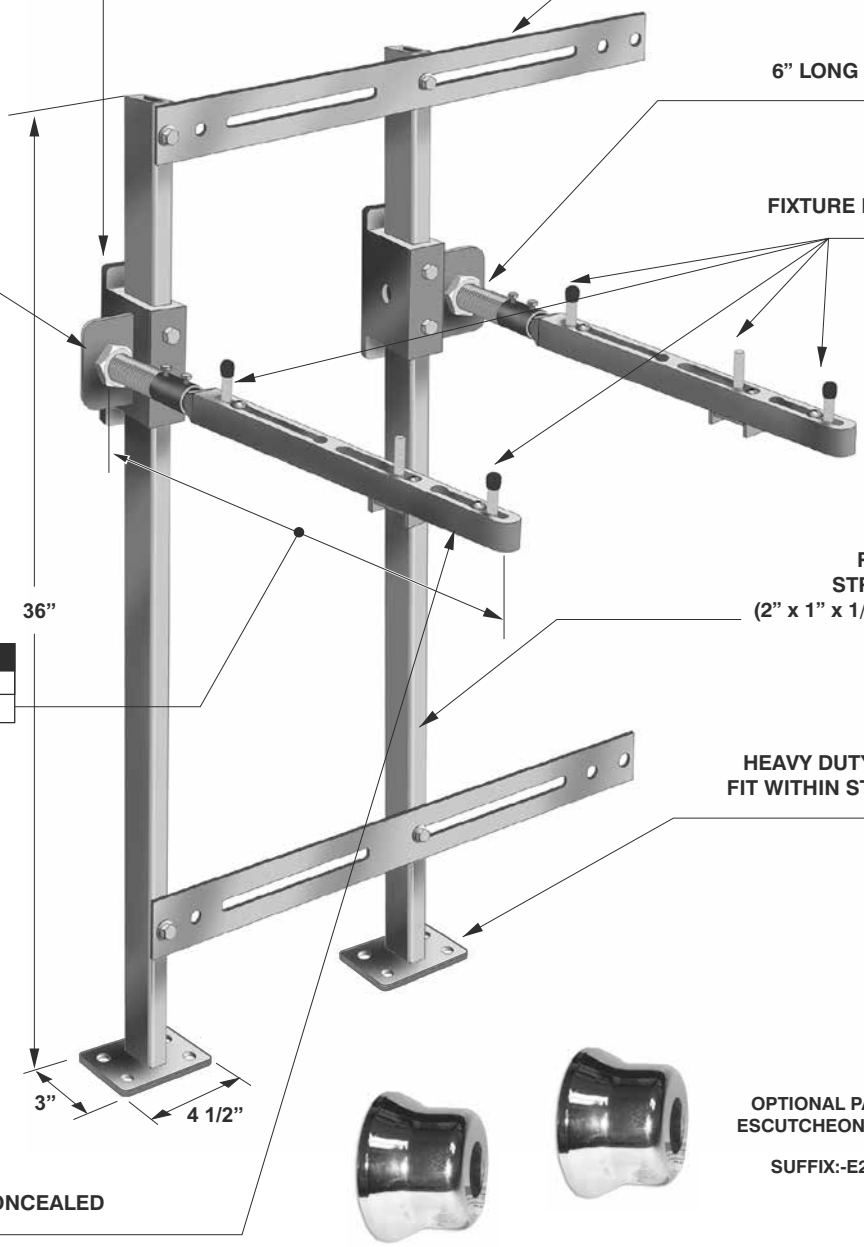

ADJ. RANGE	
MIN	MAX
16 1/8"	21"

OPTIONAL PAIR OF CHROME PLATED ESCUTCHEONS (2" x 3 3/8") FOR SLAB BACK LAVATORIES:
SUFFIX:-E2 (MC-41-PE2) $ 220.00

NOTE: Foot supports should be securely anchored to floor with ½" bolts and anchors by others

MODEL NO.	WT Lbs.	DESCRIPTION	LIST PRICE
MC-41-TR	28.00	Concealed arms with two vertical uprights and measuring plates	$ **1573.00**
MC-41D-TR	42.00	Concealed arms, back to back (Note: Option prices are double for MC-41D-TR)	$ **2296.00**

MC-41-TR OPTIONAL VARIATIONS:

SUFFIX	DESCRIPTION	LIST PRICE	SUFFIX	DESCRIPTION	LIST PRICE
-A	Add per inch for nipple length over 6"	$ **71.50**	**-G**	Wall support plate (MC-31-PUP)	$ **199.00**
-B	Floor to ceiling upright	$ **1305.00**	**-PFAB**	Prefabricated carrier bank (per carrier)	$ **337.00**
-E2	2" Chrome plated escutcheons (pair) (MC-41-PE2)	$ **220.00**	**-32**	Foot pedal mounting plate	$ **167.00**

Design and dimensions are subject to modification. Prices do not include applicable taxes. Visit **www.mifab.com** for the most recent product information.
MIFAB®, Inc., 1321 West 119th Street, Chicago, Illinois 60643-5109, USA Toll Free: 1-800-465-2736 • Fax: 1-773-341-3049
All sales subject to MIFAB's® Terms & Warranties. Please refer to inside front cover. sales@mifab.com • Canada Toll Free: 1-800-387-3880

MC-41D-R BACK TO BACK FIXTURE CARRIER WITH CONCEALED ARMS AND ROUND UPRIGHTS MC-41D-R

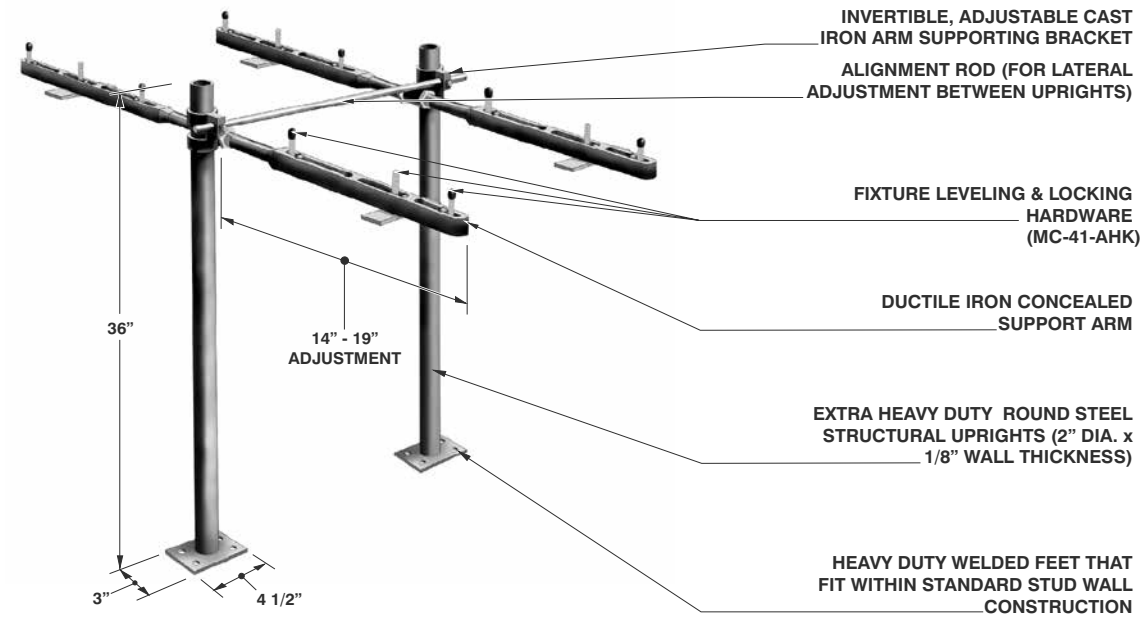

NOTE: Foot supports should be securely anchored to floor with ½" bolts and anchors by others

MODEL NO.	WT Lbs.	DESCRIPTION	LIST PRICE
MC-41D-R	40.00	Double Concealed arms w/ Round Uprights	$ 1847.00

MC-41D-R OPTIONAL VARIATIONS:

SUFFIX	DESCRIPTION	LIST PRICE	SUFFIX	DESCRIPTION	LIST PRICE
-B	Floor to ceiling upright	$ 1305.00	-PFAB	Prefabricated carrier bank (per carrier)	$ 337.00
-E2	2" Chrome plated escutcheons (pair) (MC-41-PE2)	$ 439.00	-32	Foot pedal mounting plate	$ 167.00
-G	Wall support plate, per plate (MC-31-PUP)	$ 398.00	-88	3/8" threaded eye bolts for cast iron lavs (H-1208)	$ 199.00

MC-42 FIXTURE CARRIER WITH CONCEALED ARMS FOR ADA LAVS MC-42

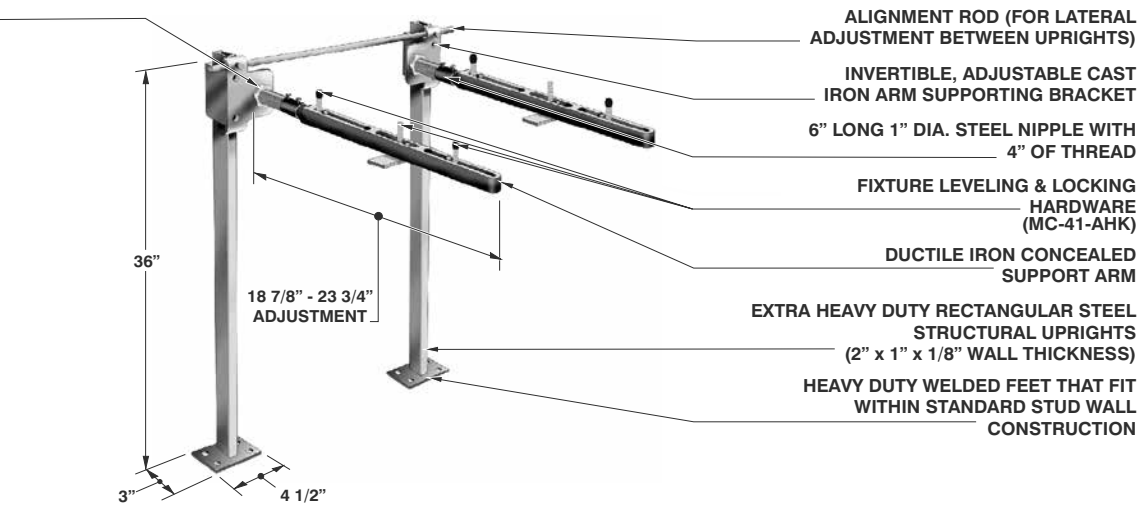

NOTE: Foot supports should be securely anchored to floor with ½" bolts and anchors by others

MODEL NO.	WT Lbs.	DESCRIPTION	LIST PRICE
MC-42	30.00	ADA Concealed arms with two vertical uprights	$ 1377.00

MC-42 OPTIONAL VARIATIONS:

SUFFIX	DESCRIPTION	LIST PRICE	SUFFIX	DESCRIPTION	LIST PRICE
-A	Add per inch for nipple length over 6"	$ 71.50	-E2	2" Chrome plated escutcheons (pair) (MC-41-PE2)	$ 220.00
-B	Floor to ceiling upright	$ 1305.00	-G	Wall support plate (MC-31-PUP)	$ 199.00
			-PFAB	Prefabricated carrier bank (per carrier)	$ 337.00

MC-42D BACK TO BACK FIXTURE CARRIER WITH CONCEALED ARMS FOR ADA LAVS MC-42D

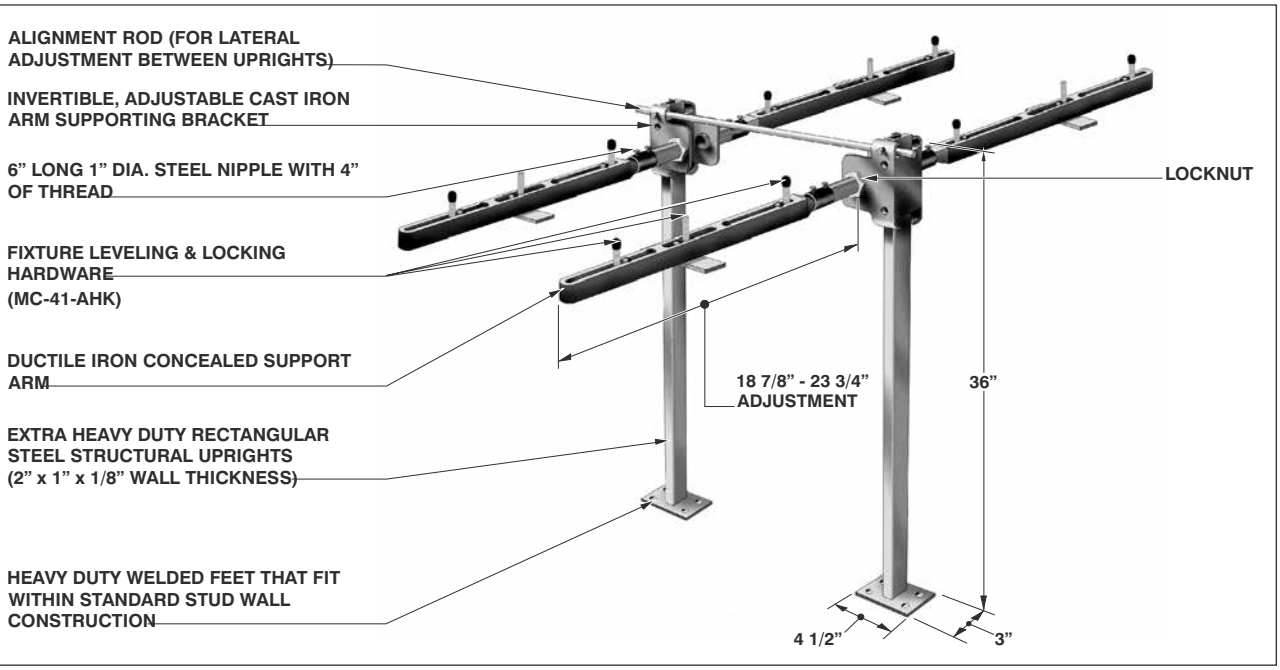

NOTE: Foot supports should be securely anchored to floor with ½" bolts and anchors by others

MODEL NO.	WT Lbs.	DESCRIPTION	LIST PRICE
MC-42D	46.00	Back to Back ADA Concealed arms with two vertical uprights	$ **2000.00**

MC-42D OPTIONAL VARIATIONS:

SUFFIX	DESCRIPTION	LIST PRICE	SUFFIX	DESCRIPTION	LIST PRICE
-A	Add per inch for nipple length over 6"	$ **143.00**	**-E2**	2" Chrome plated escutcheons (pair) (MC-41-PE2)	$ **440.00**
-B	Floor to ceiling upright	$ **1305.00**	**-G**	Wall support plate (MC-31-PUP)	$ **398.00**
			-PFAB	Prefabricated carrier bank (per carrier)	$ **337.00**

MC-42-R ADA LAV CARRIER WITH CONCEALED ARMS AND ROUND UPRIGHTS MC-42-R

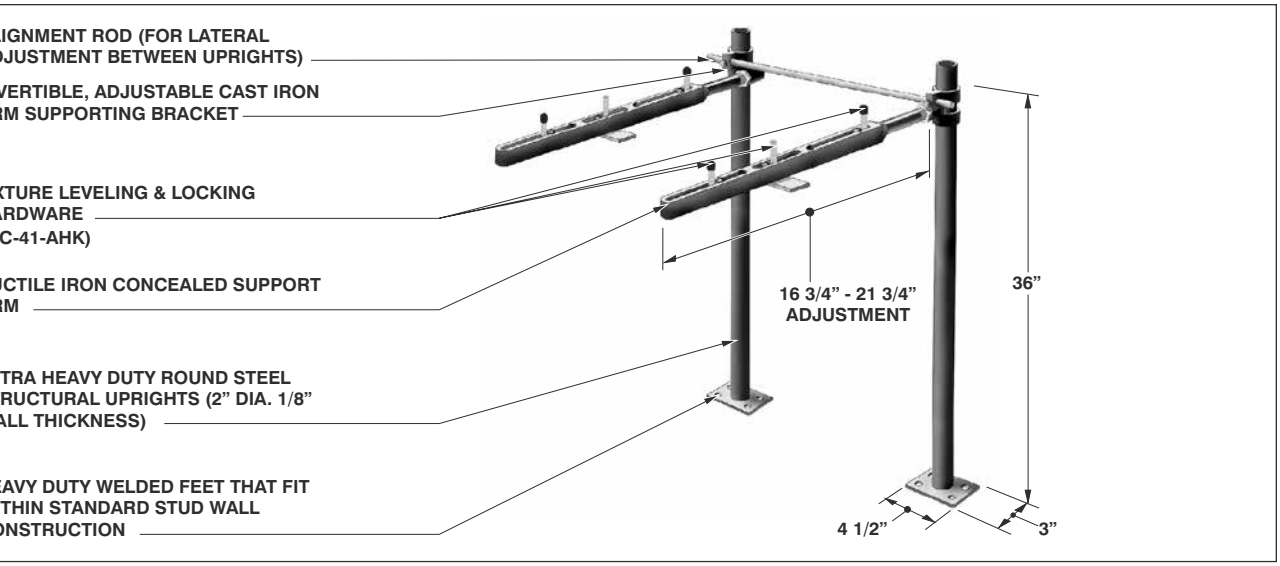

NOTE: Foot supports should be securely anchored to floor with ½" bolts and anchors by others

MODEL NO.	WT Lbs.	DESCRIPTION	LIST PRICE
MC-42-R	28.00	ADA Concealed arms with Round Upright	$ **1470.00**

MC-42-R OPTIONAL VARIATIONS:

SUFFIX	DESCRIPTION	LIST PRICE	SUFFIX	DESCRIPTION	LIST PRICE
-B	Floor to ceiling upright	$ **1305.00**	**-G**	Wall support plate (MC-31-PUP)	$ **199.00**
-E2	2" Chrome plated escutcheons (pair) (MC-41-PE2)	$ **220.00**	**-PFAB**	Prefabricated carrier bank (per carrier)	$ **337.00**

Design and dimensions are subject to modification. Prices do not include applicable taxes. Visit **www.mifab.com** for the most recent product information.
MIFAB®, Inc., 1321 West 119th Street, Chicago, Illinois 60643-5109, USA Toll Free: 1-800-465-2736 • Fax: 1-773-341-3049
All sales subject to MIFAB's® Terms & Warranties. Please refer to inside front cover. sales@mifab.com • Canada Toll Free: 1-800-387-3880

MC-42D-R BACK TO BACK ADA FIXTURE CARRIER WITH CONCEALED ARMS AND ROUND UPRIGHTS MC-42D-R

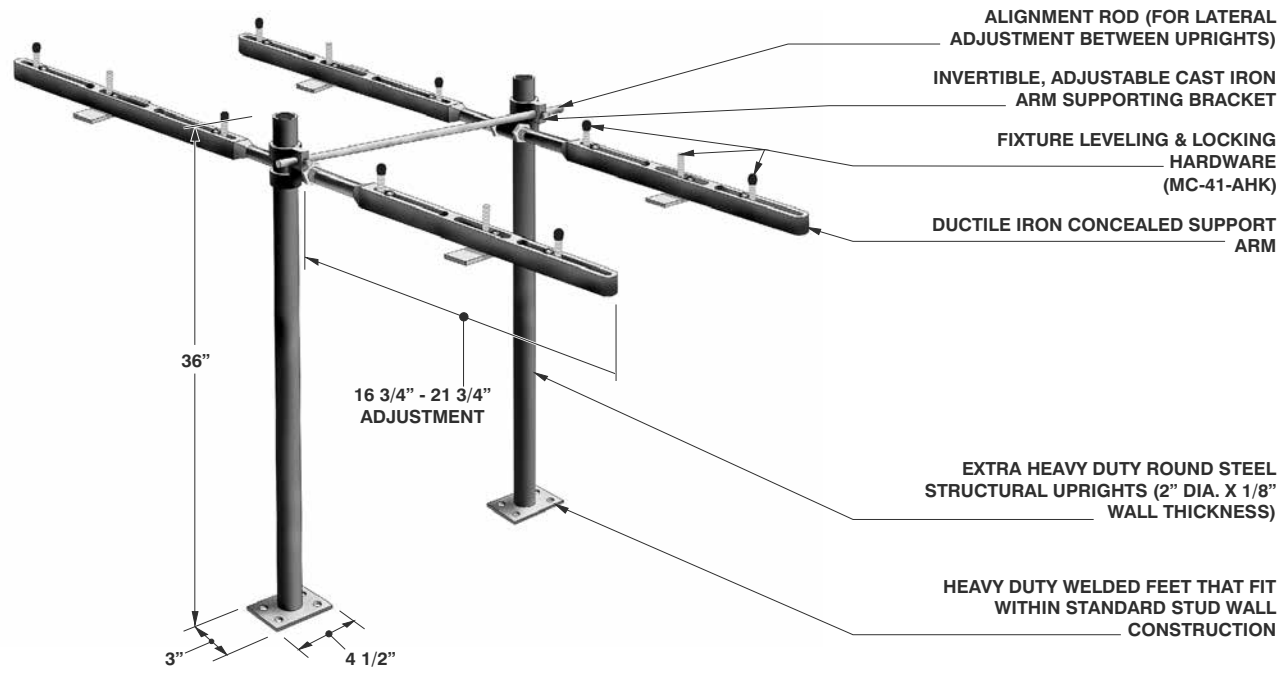

MODEL NO.	WT Lbs.	DESCRIPTION	LIST PRICE
MC-42D-R	44.00	Double ADA Concealed arms w/ Round Uprights	$ 1999.00

MC-42D-R OPTIONAL VARIATIONS:

SUFFIX	DESCRIPTION	LIST PRICE	SUFFIX	DESCRIPTION	LIST PRICE
-B	Floor to ceiling upright	$ 1305.00	-G	Wall support, plate per plate (MC-31-PUP)	$ 398.00
-E2	2" Chrome plated escutcheons (pair) (MC-41-PE2)	$ 439.00	-PFAB	Prefabricated carrier bank (per carrier)	$ 337.00

MC-51 CONCEALED ARMS WITH ADJUSTABLE PLATE MC-51

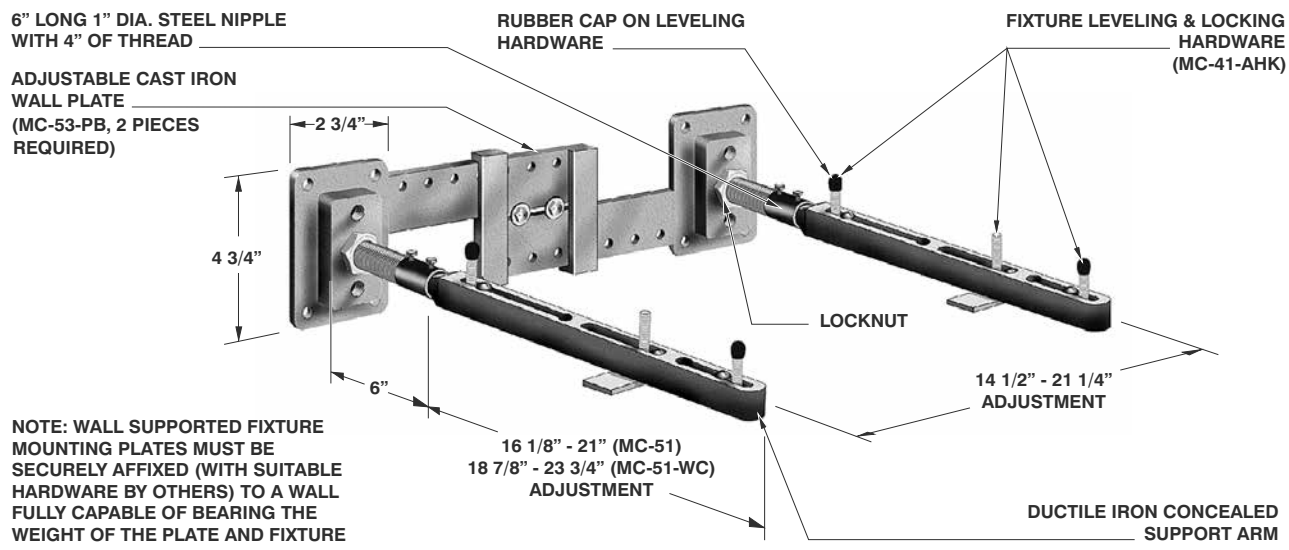

MODEL NO.	WT Lbs.	DESCRIPTION	LIST PRICE
MC-51	18.00	Concealed arms with adjustable plate	$ 772.00
MC-51-WC	20.00	ADA concealed arms with adjustable plate	$ 945.00

MC-51 OPTIONAL VARIATIONS:

SUFFIX	DESCRIPTION	LIST PRICE	SUFFIX	DESCRIPTION	LIST PRICE
-A	Add per inch for nipple length over 6"	$ 71.50	-E2	2" Chrome plated escutcheons (pair) (MC-41-PE2)	$ 220.00

MC-51-LP CONCEALED ARMS ONLY (ONE SET IS TWO ARMS) MC-51-LP

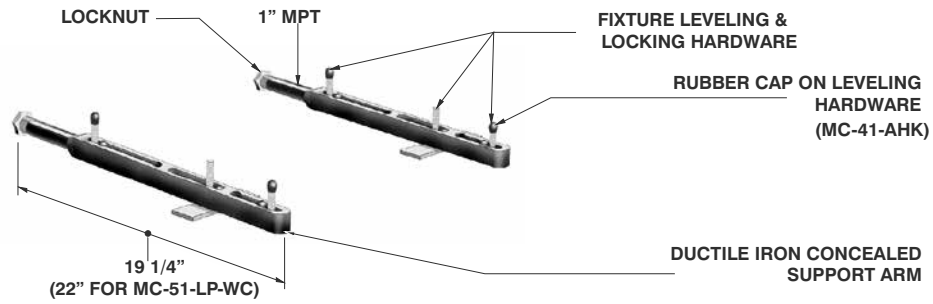

MODEL NO.	WT Lbs.	DESCRIPTION	LIST PRICE (PER SET)
MC-51-LP	7.00	Concealed arms (two pieces), less plate	$ 601.00
MC-51-LP-WC	8.00	ADA concealed arms, (two pieces), less plate	$ 774.00

MC-53 CONCEALED ARMS WITH ADJUSTABLE PLATE AND BACKING PLATES MC-53

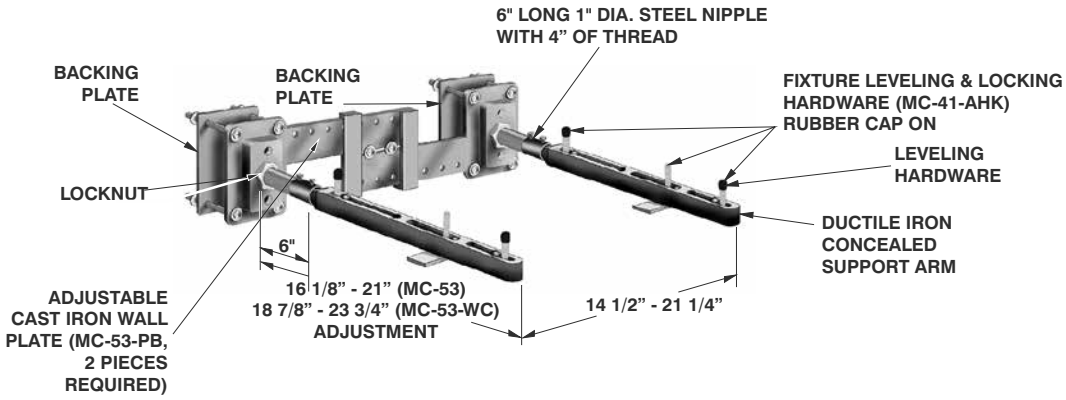

MODEL NO.	WT Lbs.	DESCRIPTION	LIST PRICE
MC-53	22.00	Concealed arms with surface adjustable plate and back-up plates	$ 767.00
MC-53-WC	24.00	ADA concealed arms with surface adjustable plate and back-up plates	$ 940.00

MC-53 OPTIONAL VARIATIONS:

SUFFIX	DESCRIPTION	LIST PRICE	SUFFIX	DESCRIPTION	LIST PRICE
-A	Add per inch for nipple length over 6"	$ 71.50	-E2	2" Chrome plated escutcheons (pair) (MC-41-PE2)	$ 220.00

Design and dimensions are subject to modification. Prices do not include applicable taxes. Visit **www.mifab.com** for the most recent product information.
MIFAB®, Inc., 1321 West 119th Street, Chicago, Illinois 60643-5109, USA Toll Free: 1-800-465-2736 • Fax: 1-773-341-3049
All sales subject to MIFAB's® Terms & Warranties. Please refer to inside front cover. sales@mifab.com • Canada Toll Free: 1-800-387-3880

MC-54 MC-54-ADJ — 16" LONG CONCEALED ARMS WITH STEEL PLATE — MC-54 MC-54-ADJ

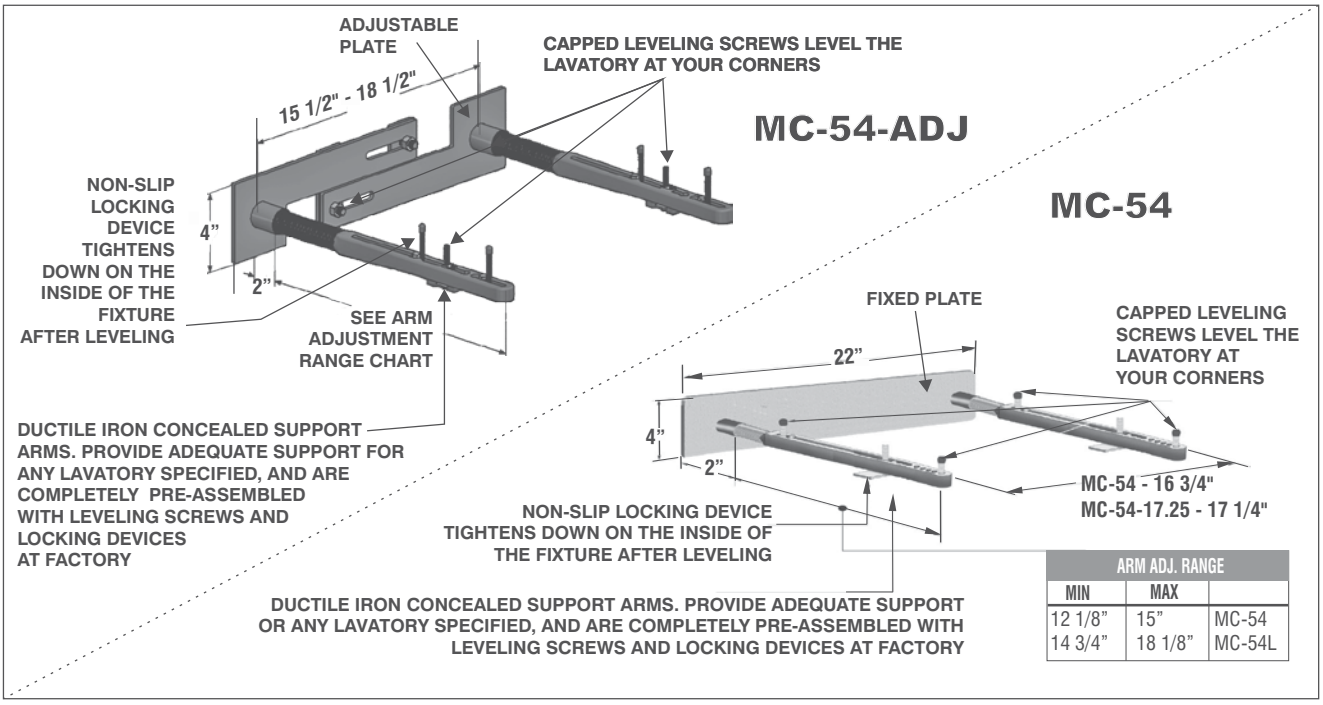

ARM ADJ. RANGE		
MIN	MAX	
12 1/8"	15"	MC-54
14 3/4"	18 1/8"	MC-54L

MODEL NO.	WT Lbs.	DESCRIPTION	LIST PRICE (PER SET)
MC-54	25.00	16" Long concealed arms on 16 3/4" center w/ steel plate	$ 601.00
MC-54L	26.00	18" Long concealed arms on 16 3/4" center w/ steel plate	$ 774.00
MC-54-17.25	25.00	16" Long concealed arms on 17 1/4" center w/ steel plate	$ 601.00
MC-54L-17.25	26.00	18" Long concealed arms on 17 1/4" center w/ steel plate	$ 774.00
MC-54-ADJ	25.00	16" Long concealed arms on adjustable back plate	$ 601.00
MC-54-ADJ-18	26.00	18" Long concealed arms on adjustable back plate	$ 774.00

MC-54 AND MC-54-ADJ OPTIONAL VARIATIONS:

SUFFIX	DESCRIPTION	LIST PRICE
-E2	2" Chrome plated escutcheons (pair) (MC-41-PE2)	$ 220.00

MC-55 — EXPOSED ARMS WITH ADJUSTABLE SURFACE PLATE & BACK MOUNTING PLATES — MC-55

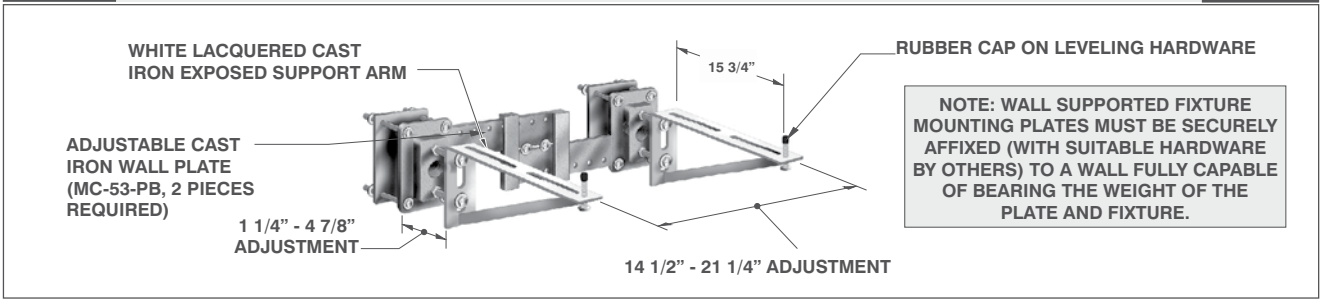

NOTE: WALL SUPPORTED FIXTURE MOUNTING PLATES MUST BE SECURELY AFFIXED (WITH SUITABLE HARDWARE BY OTHERS) TO A WALL FULLY CAPABLE OF BEARING THE WEIGHT OF THE PLATE AND FIXTURE.

MODEL NO.	WT Lbs.	DESCRIPTION	LIST PRICE
MC-55	25.00	Exposed arms with adjustable surface plate and back up plates	$ 1274.00

MC-55 OPTIONAL VARIATIONS:

SUFFIX	DESCRIPTION	LIST PRICE	SUFFIX	DESCRIPTION	LIST PRICE
-A	Stud length over 8" (specify), Add per inch	$ 71.50	-14	Vandal proof finish trim (MC-10-PFH-14)	$ 182.00
-F	Bar support valve plate	$ 199.00			

MC-56 EXPOSED ARMS WITH ADJUSTABLE SURFACE PLATE MC-56

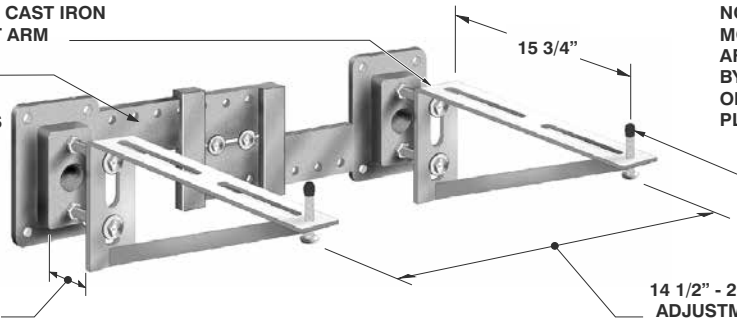

MODEL NO.	WT Lbs.	DESCRIPTION	LIST PRICE (PER SET)
MC-56	24.00	Exposed arms with adjustable surface plate	$ **772.00**
MC-56-LP	15.00	Exposed arms, less plate	$ **535.00**

MC-56 SERIES OPTIONAL VARIATIONS:

SUFFIX	DESCRIPTION	LIST PRICE	SUFFIX	DESCRIPTION	LIST PRICE
-A	Stud length over 8" (specify), Add per inch	$ **71.50**	**-14**	Vandal proof finish trim (MC-10-PFH-14)	$ **182.00**
-F	Bar support valve plate	$ **199.00**			

MC-61 MC-62 FLOOR SUPPORTED SYSTEM WITH OUTLET CONNECTIONS FOR WALL URINALS AND SERVICE SINKS MC-61 MC-62

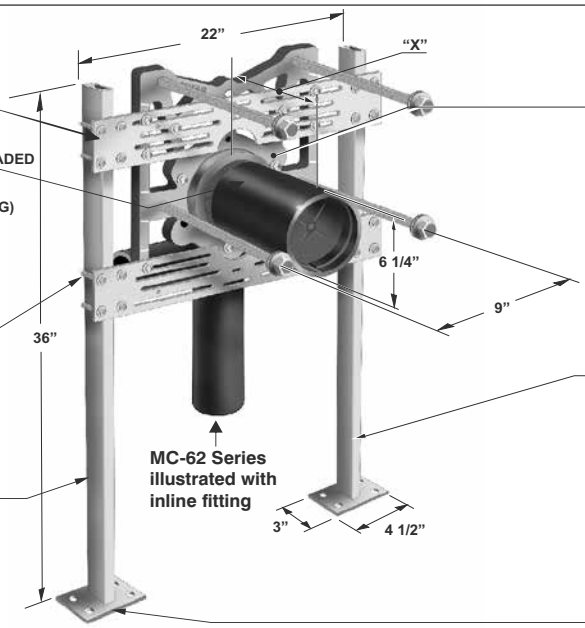

NOTE: FOR DEPTH OF MC-60 SERIES, SEE MC-14 ON PAGE 244

NOTE: FOOT SUPPORTS SHOULD BE SECURELY ANCHORED TO FLOOR WITH ½" BOLTS AND ANCHORS BY OTHERS (ONLY ONE ANCHOR NEEDED PER FOOT)

MODEL NO.	WT Lbs.	DESCRIPTION	LIST PRICE
MC-61-N	55.00	Two vertical uprights with 4" No Hub waste connection	$ **1556.00**
MC-61-T	55.00	Two vertical uprights with 4" female threaded connection	$ **1556.00**
MC-62-3-V2	71.00	Two vertical uprights with 3" inline fitting with 2" vent	$ **1764.00**
MC-62-4-V2	79.00	Two vertical uprights with 4" inline fitting with 2" vent (**$32.50** for -HS option)	$ **1865.00**
MC-62-4-V4	79.00	Two vertical uprights with 4" inline fitting with 4" vent	$ **1865.00**

MC-61 and MC-62 OPTIONAL VARIATIONS:

SUFFIX	DESCRIPTION	LIST PRICE	SUFFIX	DESCRIPTION	LIST PRICE
-10	Auxiliary support, recommended with nipple lengths over 12" (MC-10-AFS)	$ **1121.00**	**-CI-4**	4" rolling thread cast iron nipple (MC-10-PN4R-50)	**No Add**
			-CI-6	6" rolling thread cast iron nipple (MC-10-PN6R-50)	**No Add**
-12*	12" tapered thread ABS nipple* (MC-10-PN12-31)	**No Add**	**-CI-8**	8" rolling thread cast iron nipple (MC-10-PN8R-50)	**No Add**
-14	Vandal proof finish trim (MC-10-PFH-14)	$ **182.00**	**-CI-12***	12" rolling thread cast iron nipple (MC-10-PN12R-50)	$ **137.00**
-19	Nipple wrench (MC-10-PCW)	$ **142.00**	**-CI-24**	24" rolling thread cast iron nipple (MC-10-PN24R-50)	$ **395.00**
-20	Flush valve support (MC-10-FVS)	$ **119.00**	**-OR8**	8" rolling thread ABS nipple (MC-10-PN8R-31)	**No Add**
-32	Foot pedal mounting plate	$ **167.00**	**-OR12***	12" rolling thread ABS nipple (MC-10-PN12R-31)	**No Add**
-AH8	8" ABS nipple with adjustable horn (MC-10-PN8AH-31)	**No Add**	* H-1167-KA-14 (Threaded rods for 12" nipples 5/8" x 14")		$ **64.00**
-AH12*	12" ABS nipple with adjustable horn* (MC-10-PN12AH-31)	**No Add**			

Design and dimensions are subject to modification. Prices do not include applicable taxes. Visit **www.mifab.com** for the most recent product information.
MIFAB®, Inc., 1321 West 119th Street, Chicago, Illinois 60643-5109, USA Toll Free: 1-800-465-2736 • Fax: 1-773-341-3049
All sales subject to MIFAB's® Terms & Warranties. Please refer to inside front cover. sales@mifab.com • Canada Toll Free: 1-800-387-3880

CUSTOM CARRIERS WITH UPRIGHTS
CONTACT MIFAB FOR ADDITIONAL CARRIER LAYOUTS

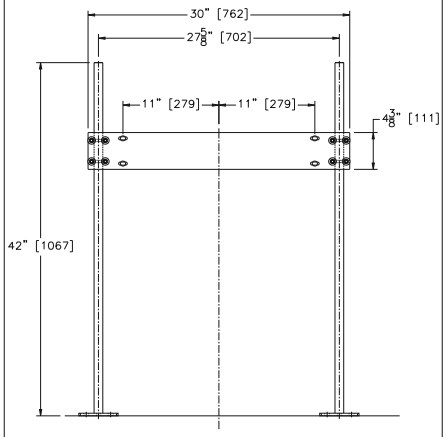

MC-31-BRADLEY-FL-1L
CARRIER FOR BRADLEY FL-1L

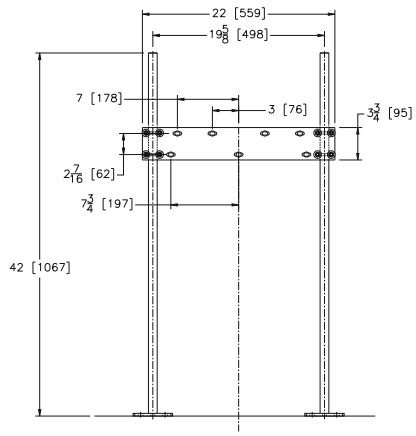

MC-31-BRADLEY-SS-1N
CARRIER FOR BRADLEY SS-1N

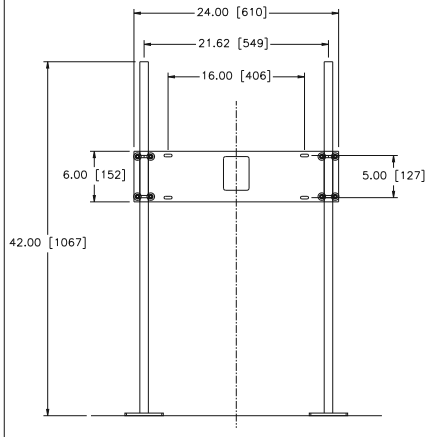

MC-31-ELKAY-EDFPB114C
CARRIER FOR ELKAY EDFPB114C

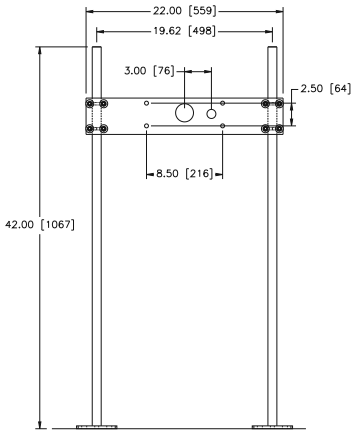

MC-31-HAWS-H1107L
CARRIER FOR HAWS H1107L

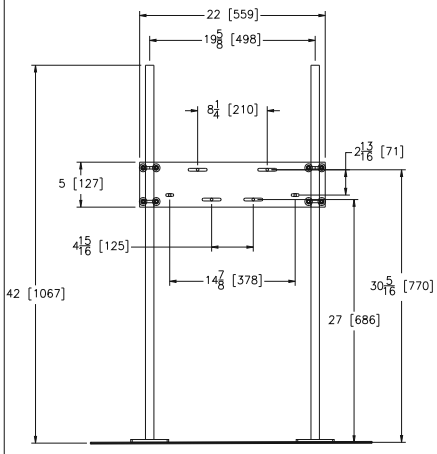

MC-31-KOHLER-K-2035
CARRIER FOR KOHLER K-2038

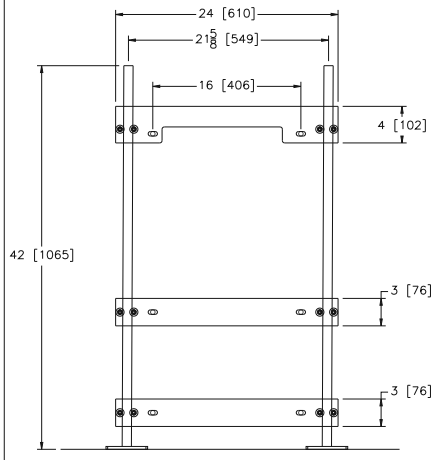

MC-32-ACORN-1440
CARRIER FOR ACORN 1440

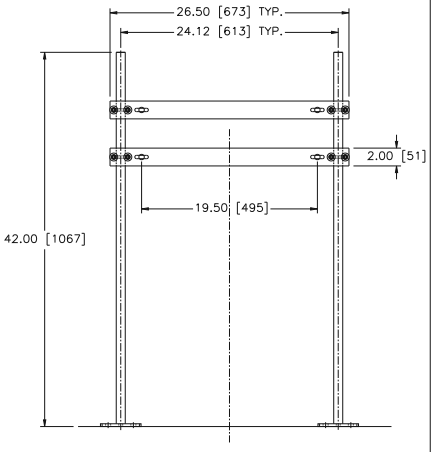

MC-32-ADVANCE-TABCO-7-PS-25
CARRIER FOR ADVANCE TABCO 7-PS-25

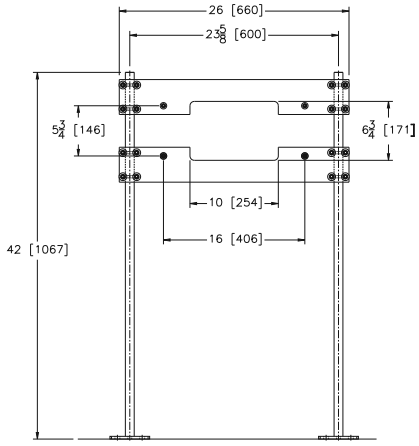

MC-32-ELKAY-EHW214C
CARRIER FOR ELKAY EHW214C

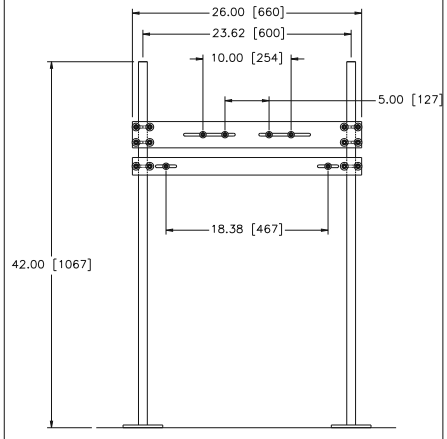

MC-32-KOHLER-K-2810
CARRIER FOR KOHLER K-2810

CUSTOM CARRIERS WITH UPRIGHTS
CONTACT MIFAB FOR ADDITIONAL CARRIER LAYOUTS

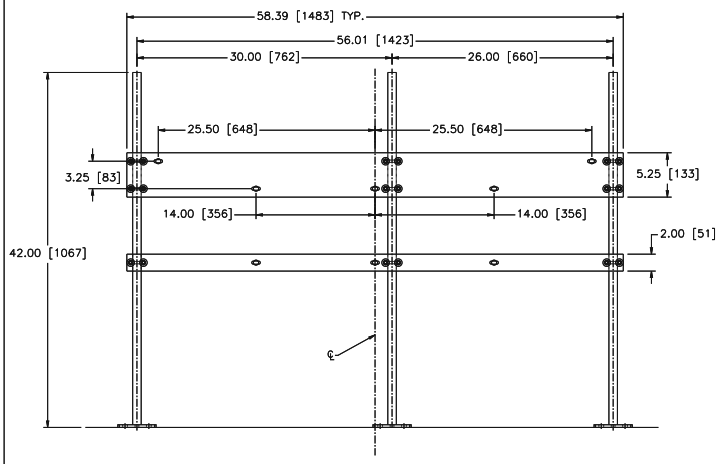

MC-33-BRADLEY-MG-2
CARRIER FOR BRADLEY MG-2

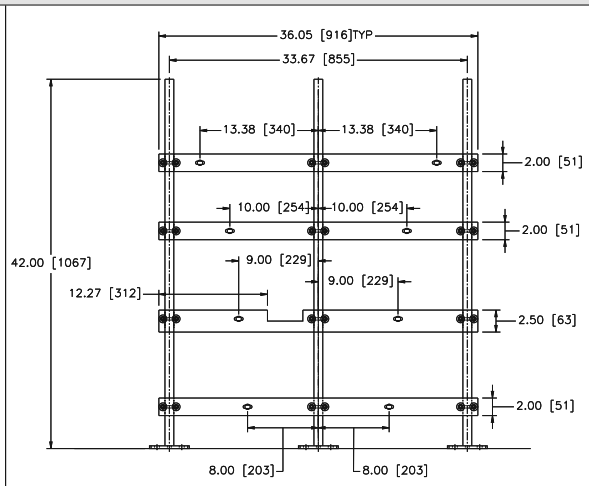

MC-33-BRADLEY-SN2023
CARRIER FOR BRADLEY SN2023

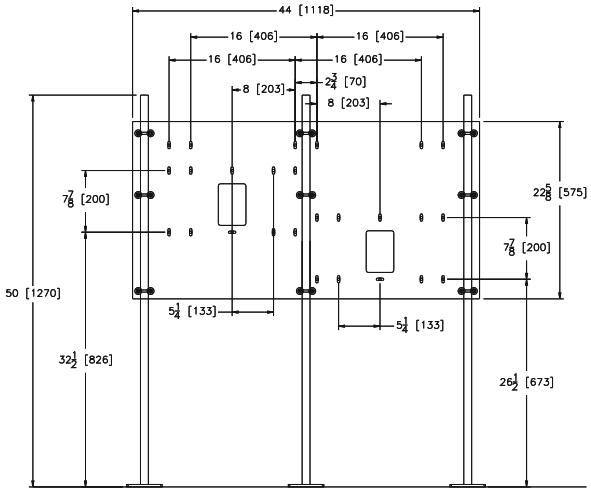

MC-33-ELKAY-EDFPB117C
CARRIER FOR ELKAY EDFPB117C

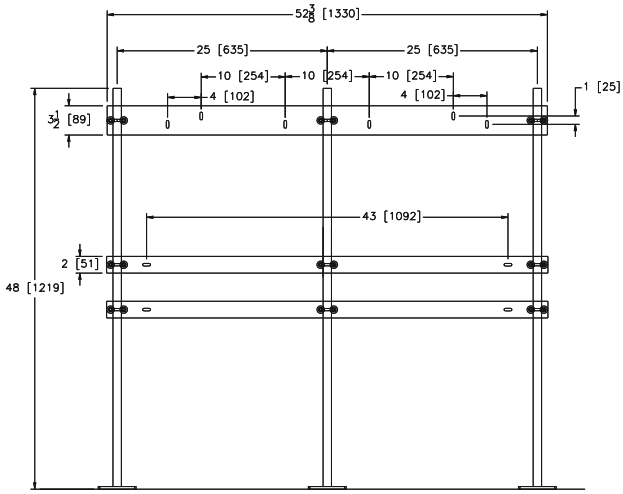

MC-33-ELKAY-EWMA4820
CARRIER FOR ELKAY EWMA4820

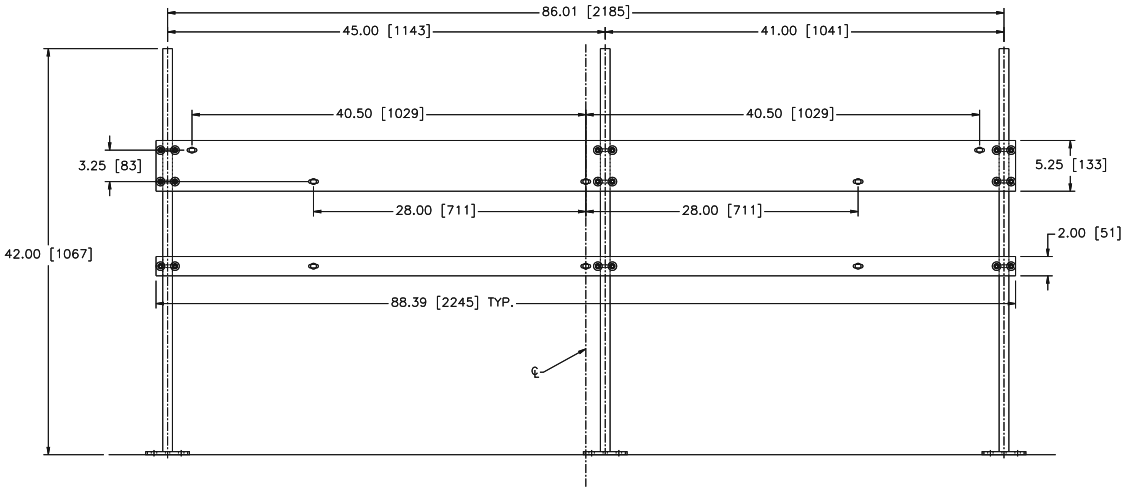

MC-33-BRADLEY-MG-3
CARRIER FOR BRADLEY MG-3

Design and dimensions are subject to modification. Prices do not include applicable taxes. Visit **www.mifab.com** for the most recent product information.
MIFAB®, Inc., 1321 West 119th Street, Chicago, Illinois 60643-5109, USA Toll Free: 1-800-465-2736 • Fax: 1-773-341-3049
All sales subject to MIFAB's® Terms & Warranties. Please refer to inside front cover. sales@mifab.com • Canada Toll Free: 1-800-387-3880

HYDRANTS

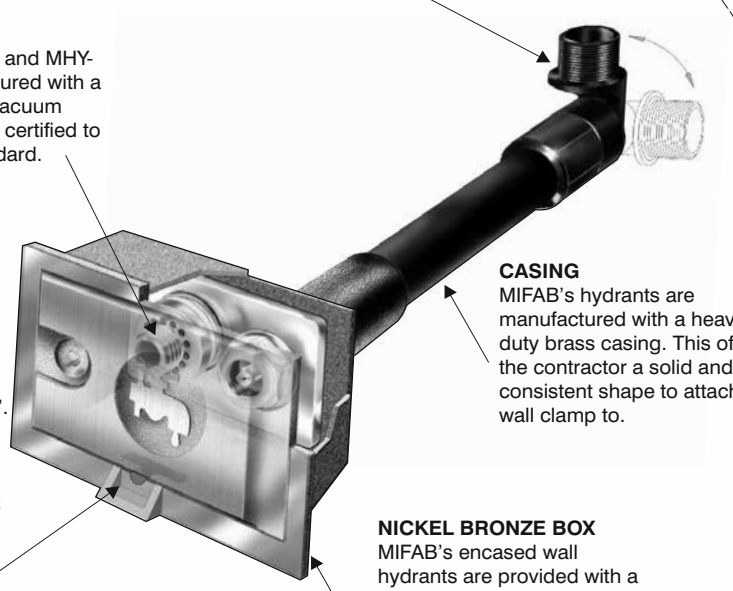

DUAL SIZE INLET CONNECTION
MIFAB's hydrants are manufactured with a combination 3/4" female and 1" male threaded "inlet" connection for maximum installation flexibility.

VACUUM BREAKER
MIFAB's MHY-10, MHY-20 and MHY-60 hydrants are manufactured with a vandal resistant integral vacuum breaker that is tested and certified to the A.S.S.E. 1019-B Standard.

CASING
MIFAB's hydrants are manufactured with a heavy duty brass casing. This offers the contractor a solid and consistent shape to attach a wall clamp to.

DRIP LIP
MIFAB's hydrant boxes are manufactured with a "drip lip". When the hydrant is turned off, and the hose is removed, the water that is within the hydrant will drain into the box and down the drip lip, away from the wall and onto the ground. This eliminates unsightly stains on the wall below the hydrant box which is typical with others.

NICKEL BRONZE BOX
MIFAB's encased wall hydrants are provided with a heavy duty cast nickel bronze box with hinged locking cover for maximum durability. Optional cast Stainless Steel box will not discolor due to oxidation. Specify suffix -3.

(MHY-20 ILLUSTRATED)

MIFAB Hydrant Selection Guide

MIFAB HYDRANT SELECTION GUIDE

MIFAB hydrants are engineered to control the supply of water in various types of applications. Due to a wide range of uses, careful consideration should be taken when selecting and specifying the hydrants. The information provided below will aid the specifier in selecting the correct hydrant for the application considering such issues as temperature, recessed boxes, vacuum breaker / backflow preventer and optional variations.

WALL HYDRANTS

The most common installation area for hydrants is in the wall. They may be installed either inside or outside of commercial buildings and serve numerous purposes including watering plants and shrubs and washing floors or parking areas. Non-freeze wall hydrants are available in various lengths to accommodate different wall thick - nesses to ensure that the inlet connection is inside the heated building to prevent freezing. Sometimes, nonfreeze wall hydrants must be concealed entirely within the wall. In these instances, an overall dimension can be specified. This dimension measures from the back of the face of the hydrant to the end of the inlet connection. Extra precautions must be taken to properly insulate the valve body to protect against freezing. In addition to the standard wall hydrant, MIFAB offers a combination hot and cold water hydrant that allows connection to both hot and cold supplies. It is used to supply tempered water. See MIFAB MHY-45.

NARROW WALL HYDRANTS

Narrow wall hydrants are installed in areas where the entire product must fit within a 4" thick wall. A unique feature on the inlet supply of the MIFAB hydrant permits the installer to rotate the connection to any position to connect to the water supply line. The narrow wall hydrant may also be encased to gain all of the advantages of installing the hydrant in a recessed box. MIFAB's MHY-55 encased narrow wall hydrant has an overall length of 3 5/8" to ensure that it will still fit within a 4" thick wall.

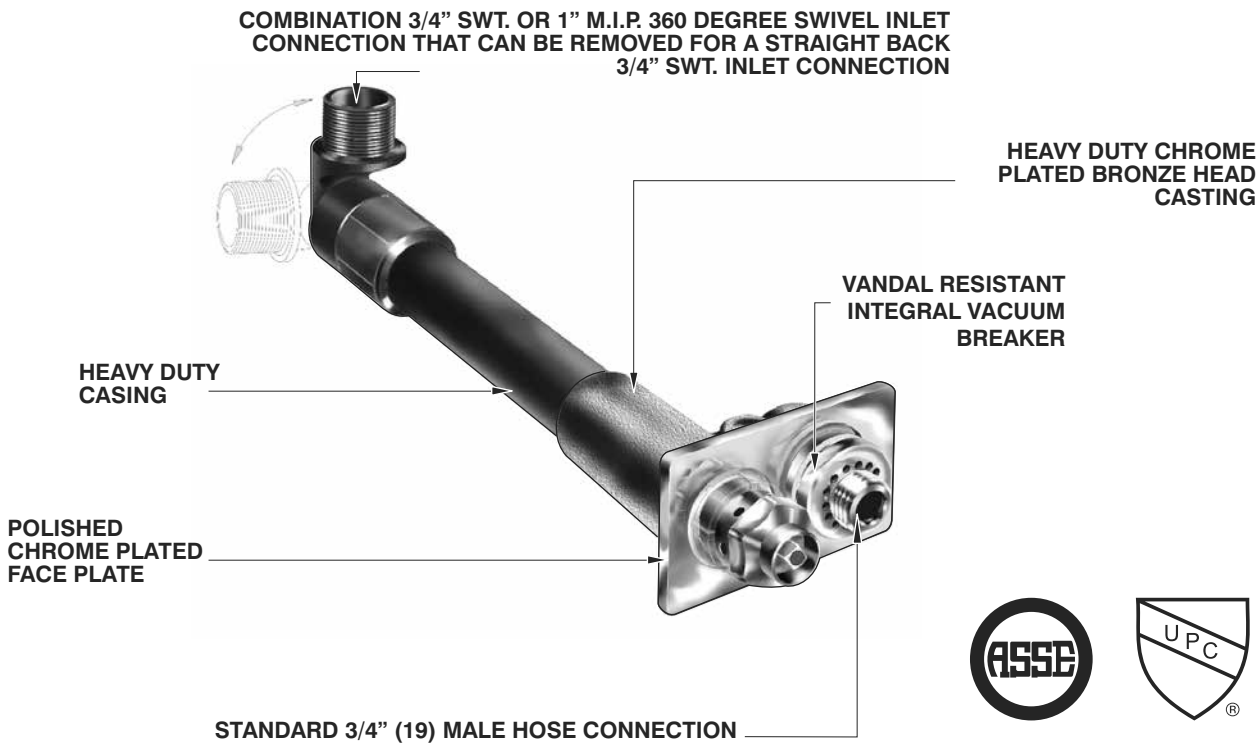

Design and dimensions are subject to modification. Prices do not include applicable taxes. Visit **www.mifab.com** for the most recent product information.
MIFAB®, Inc., 1321 West 119th Street, Chicago, Illinois 60643-5109, USA
Toll Free: 1-800-465-2736 • Fax: 1-773-341-3049
sales@mifab.com • Canada Toll Free: 1-800-387-3880
All sales subject to MIFAB's® Terms & Warranties. Please refer to inside front cover.

MIFAB Hydrant Selection Guide (Contd.)

RECESSED BOXES

MIFAB's recessed hydrant boxes are made with a flange that covers the rough opening and is installed flush against the exterior wall surface. The hinged locking cover conceals the hose nozzle and all of the operating parts. The advantages of the flush recessed box:

- Recessed box provides roughing in the box flush with the exterior wall for a pleasing appearance.
- The hose connection and operating mechanism are concealed within the box instead of protruding from the wall surface.
- The box has a locking hinged cover that will prevent unauthorized access and vandalism of the operating mechanism and hose nozzle. The same key that operates the hydrant also unlocks the box. This key is a special 3-3/4" long to ensure that the operator's fingers are outside of the hydrant box while operating the hydrant. Typically, short keys are provided by others that result in the operator's fingers being scraped or cut by the inside of the hydrant box.

MIFAB hydrant boxes are standard in a satin finished nickel bronze material. Polished chrome plated and cast stainless steel, are also available. The open face hydrant should be specified when the operating mechanism and hose nozzle is preferred to be exposed and may extend beyond the finished wall. This hydrant should be installed in a concealed location or where security is provided. MIFAB's MHY-10 and MHY-30 hydrants can be easily attached to the hydrant box. The hydrant is inserted through the front of the box until the back of the faceplate rests flush against the inside of the box. Two set screws on the top and bottom of the back of the box are used to tighten the hydrant securely into the box.

MIFAB has engineered several unique features into its' wall hydrant boxes.

- A “drip lip" on the exterior of the hydrant box accumulates water that results from the closing of the hydrant. This residual water drips from the lip onto the ground clear of the wall. Standard competitive designs cause unsightly oxide stains on the wall.
- The bottom of MIFAB's hydrant boxes are solid. There are no slots or grooves for water to drain back into the wall and cause damage.
- The boxes are also available with four 1" x 1" slots (suffix -S) (one at each side and two on the top of the box) and three mounting brackets (suffix -BR) for easy installation by the contractor into the frame or ladder system. Too often, contractors have difficulty installing hydrant boxes into walls because nothing is provided to secure the box to the wall. Many contractors go to considerable expense to fabricate their own hydrant box mounting devices. MIFAB's hydrant boxes eliminate these extra costs and ensure that the installation and operation of the hydrant box is simple.

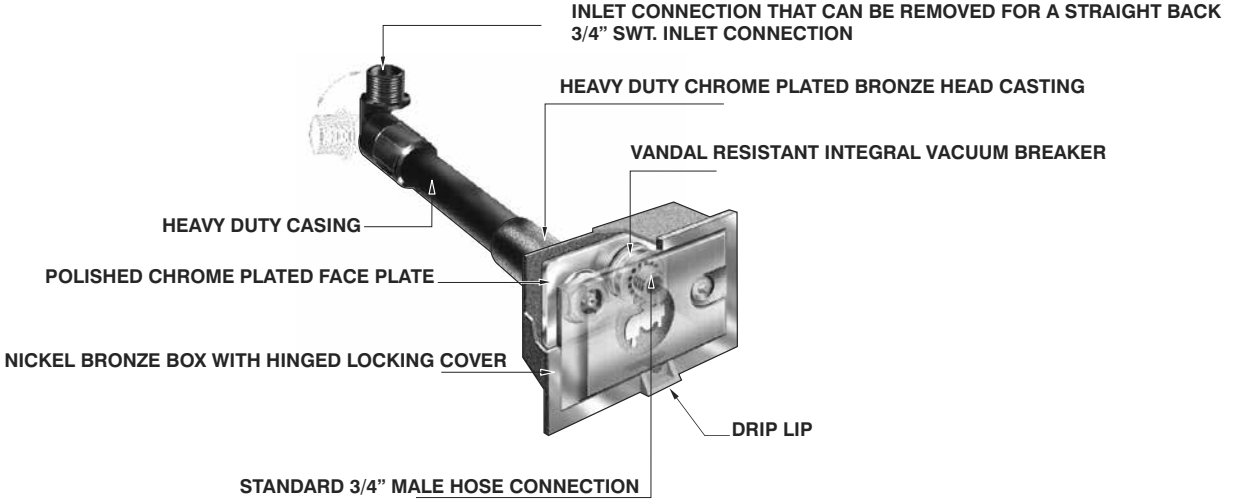

MIFAB Hydrant Selection Guide (Contd.)

MHY-68 ILLUSTRATED

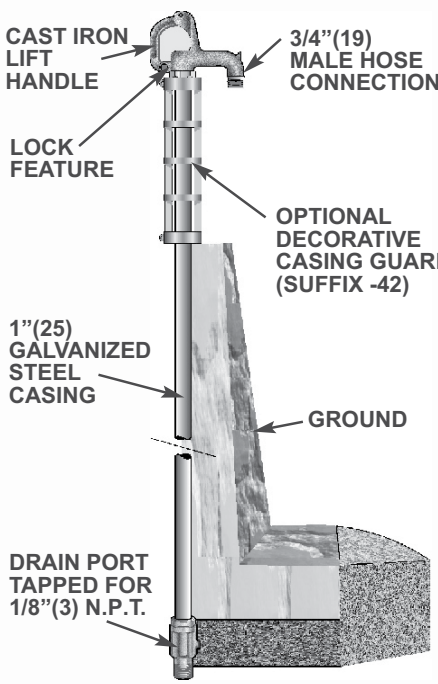

MHY-60 ILLUSTRATED

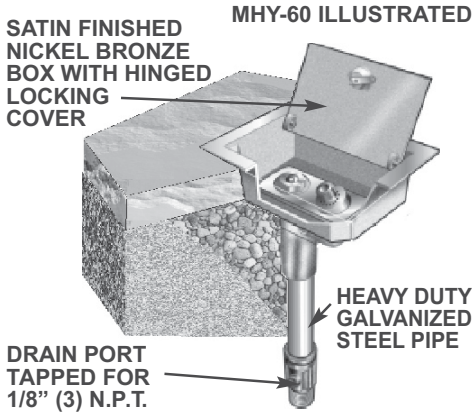

MHY-90 ILLUSTRATED

GROUND, POST and YARD HYDRANTS

Ground hydrants are available for buried applications. The hydrant control and hose connection are housed in a box which is installed flush with the ground or floor. These hydrants are standard with a 1/8" tapped hole in the valve body to drain water from the casing after operation. The valve body should be set in a bed of gravel so that water drained from the casing can leach into the ground. Some locations that require non freeze ground hydrants cannot permit water draining from the 1/8" tapped hole. Parking garages, plazas, and roof decks used for recreational purposes are obvious examples. In these types of applications, the valve body will protrude into a finished area that is not subject to freezing. A drain line can be connected to the 1/8" tapped hole to carry away water. The depth of bury should be specified to match the hydrant to the water supply piping which must be below the frost line. Post hydrants are similar in application except that the ground hydrant outlet is recessed below ground and the post hydrant series as an above ground outlet. Yard hydrants are typically used in parks, recreational areas and other places that require both clean, uncontaminated water and the assurance that the water system will not be polluted through the hydrant installation. The yard hydrant drains residual standpipe water while protecting against cross connection with ground water.

WALL FAUCETS

Wall faucets are required in restrooms, mechanical rooms, and storage areas to prevent the evaporation of water from floor drain traps. Floor drains in these areas often do not receive enough water from the cleaning of the floors to maintain the water seal in their traps. A reliable supply of water is supplied by the MIFAB wall faucet, when operated by maintenance personnel. Typically, they are installed underneath lavatories or counters in restrooms. Wall faucets are also commonly used in moderate climate residential applications and are available with or without an enclosed box. Three different finishes are available: cast brass, rough chrome plated and polished chrome plated. Four different handle options are available: clear plastic wheel handle, brown plastic wheel handle, cast iron wheel handle and loose operating key. Also, 1/2" and 3/4" F.P.T. inlet supply connections are available.

Design and dimensions are subject to modification. Prices do not include applicable taxes. Visit **www.mifab.com** for the most recent product information.
MIFAB®, Inc., 1321 West 119th Street, Chicago, Illinois 60643-5109, USA
Toll Free: 1-800-465-2736 • Fax: 1-773-341-3049
sales@mifab.com • Canada Toll Free: 1-800-387-3880
All sales subject to MIFAB's® Terms & Warranties. Please refer to inside front cover.

MIFAB Hydrant Selection Guide (Contd.)

TEMPERATURE CONSIDERATIONS

One of the most critical factors in determining the correct hydrant to specify is how ambient temperature will affect its' operation. Moderate climate hydrants are not self draining and should only be specified in heated areas or "mild climates" where freezing temperatures are not a possibility. Non freeze wall hydrants may be installed outside or on outside walls where freezing temperatures may occur. To prevent these hydrants from freezing, the actual valve mechanism susceptible to freezing is positioned away from outside temperatures. Also, standing water is drained from the hydrant after each use via a built-in drainage system. Misapplication of a hydrant regarding surrounding temperature could result in water damage or costly repairs to the hydrant or water piping.

VACUUM BREAKER / BACKFLOW PREVENTER

A vacuum breaker or backflow preventer is an important consideration in preventing fluids from siphoning back from the hose connection into the hydrant or water supply . All MIFAB hydrants are available with vacuum breakers that are A.S.S.E. certified. When the hydrant valve is open, the supply of water flows through the hydrant and the vacuum breaker automatically opens to allow the water to flow through the hose connection. Water from upstream can siphon back into the hydrant if the hydrant valve is left open and there is no vacuum breaker. A vacuum breaker will automatically close to allow water to drain through it's air vents and not back through the hydrant. When the hydrant valve is closed, the water left in the hydrant is allowed to drain out of the water relief ports surrounding the operating mechanism while the vacuum breaker automatically closes to prevent backflow from the hose. The preceding paragraph is very important because it describes the draining of the water left in the hydrant body after the hydrant valve is closed. The draining function is critical because water could freeze if it is left inside of the hydrant body . The hydrant must be installed in the correct position to correctly drain and eliminate the possibility of freezing. All wall hydrants must be installed in a horizontal position. If the hydrant were to be installed with the face plate in the vertical position with the vacuum breaker on the bottom, the vacuum breaker will not permit water to drain from the hydrant and eventually cause the excess water in the hydrant to freeze.

MHY-35 ILLUSTRATED

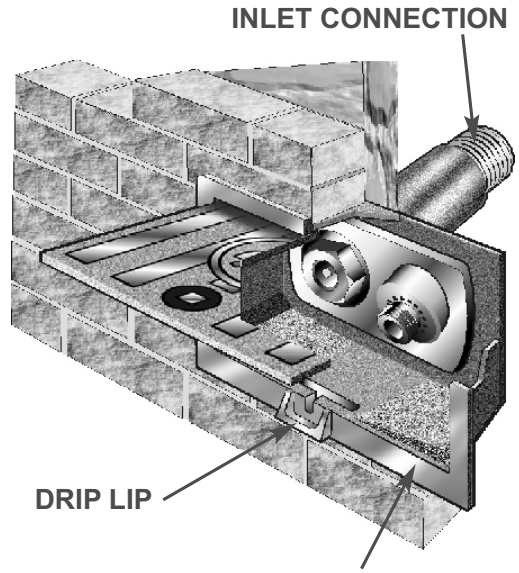

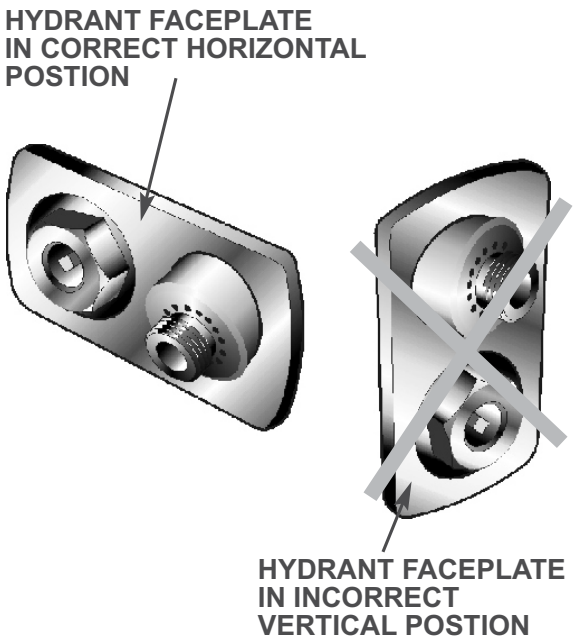

MIFAB Hydrant Selection Guide (Contd.)

SUGGESTED APPLICATIONS FOR MIFAB HYDRANTS

Wall hydrants	Non-freeze	Moderate climate
Apartments	MHY-10	MHY-30, MHY-35
Cleaning Areas Slop sinks	MHY-10	
Commercial / Multi Family, Narrow wall construction		MHY-30
Hospitals, Institutions, Schools	MHY-20	MHY-35
Office Buildings	MHY-20	MHY-35
Retail Stores	MHY-20 MHY-10	MHY-35

Ground hydrants	Non-freeze	Moderate climate
Agricultural, Farms	MHY-65, MHY-68	
Gardens	MHY-60, MHY-60-HSB, MHY-65, MHY-68	MHY-35
Industrial	MHY-60-HSB	
Malls, Supermarkets	MHY-60	MHY-35
Recreational Areas, Parks	MHY-60, MHY-60-HSB, MHY-68	
Stables, Livestock Areas	MHY-65, MHY-68	

Note: Any of the non-freeze hydrants may be used in moderate climates

FLOW RATES, OPERATING PRESSURES AND TEMPERATURE RANGE

MIFAB's 3/4" hose connection wall and ground hydrants provide a flow of approximately 10 GPM under average water line pressures. The flow rates are in excess of 100 GPM for the 1-1/4", 1-1/2", and 2" hose connection hydrants.

The maximum static operating pressure is 125 psi and the minimum running pressure is 8 psi for MIFAB's wall and ground hydrants.

The maximum temperature range is 130 degrees Fahrenheit and the minimum temperature range is 33 degrees Fahrenheit for MIFAB's wall and ground hydrants.

Design and dimensions are subject to modification. Prices do not include applicable taxes. Visit **www.mifab.com** for the most recent product information.
MIFAB®, Inc., 1321 West 119th Street, Chicago, Illinois 60643-5109, USA
Toll Free: 1-800-465-2736 • Fax: 1-773-341-3049
sales@mifab.com • Canada Toll Free: 1-800-387-3880
All sales subject to MIFAB's® Terms & Warranties. Please refer to inside front cover.

MHY-CIA-18-A (FOR ALL HY-1000, HY-2000, MHY-10 and MHY-15, MHY-16, MHY-20, MHY-25 AND MHY-26) COMPLETE INTERNAL ASSEMBLY REPLACEMENT INSTRUCTIONS - HYDRANT REPAIR KIT

This kit includes: 2-plunger assemblies; 2-worm stem assemblies; 2-lock nuts; 1-head nut seal; 1-tube thread locker; 1-tube lubricant

REMOVAL

Shut off water supply to hydrant and relieve water pressure.

Remove hydrant stem assembly. (Do not disassemble. The old stem must remain assembled for reference dimensions.) Remove the old head nut seal.

Note: The plunger tips provided in this kit will replace all old versions of plunger tips. See inset.

MEASUREMENT

Fully thread the appropriate worm stem assembly on to

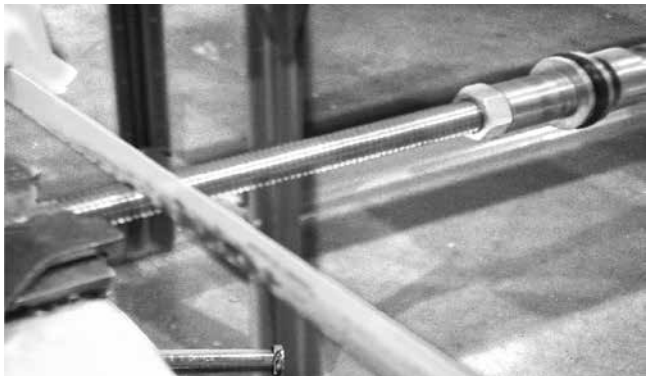

the 4-1/4" uninterrupted threaded end of the fully threaded rod. Lay the old stem assembly next to the new stem, aligning the o-rings on the worm stem assemblies. Mark the groove in the threaded rod that is closest to the end of the old plunger tip, but not past the plunger end. Using the appropriate holding fixture and a 32TPI hack saw, cut the threaded rod to the appropriate length.

Note: The undercut grooves in the threaded rod will guide the hack saw blade without the need for thread end "clean up" after cutting. See inset.

ASSEMBLY AND ADJUSTMENT

Remove the worm stem assembly from the cut rod and

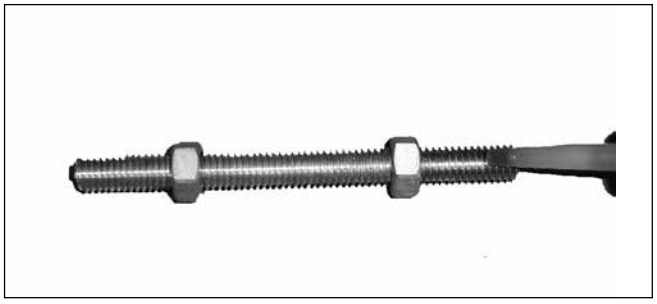

thread the two lock nuts onto the rod approximately 1" inward from each end. Apply thread locker to the two ends of the threaded rod (approx. 3/8" coverage) and a small amount to the internal threads of the plunger and worm assemblies.

Thread the worm stem assembly until seated fully and then thread the plunger assembly to match the length of the old hydrant stem assembly. (Remove excess thread locker.)

Note: Align the o-rings of the two stems side by side and adjust the plunger tips to match.

Once the proper length has been attained, advance the lock nuts toward the two end assemblies and tighten with a 9/16" wrench.

Generously apply lubricant to the plunger tip seals, o-rings, and worm stem screw threads.

INSTALLATION

Install the new head nut seal into the body of the hydrant. Thread the worm screw fully into the head nut using a hydrant key. Thread the head nut and stem assembly into the hydrant body and tighten.

Shut off the hydrant and open the water supply.

Test the hydrant for proper function.

HYDRANTS

MHY-10 TO MHY-16 NON-FREEZE EXPOSED WALL HYDRANT WITH SELF DRAINING VACUUM BREAKER MHY-10 TO MHY-16

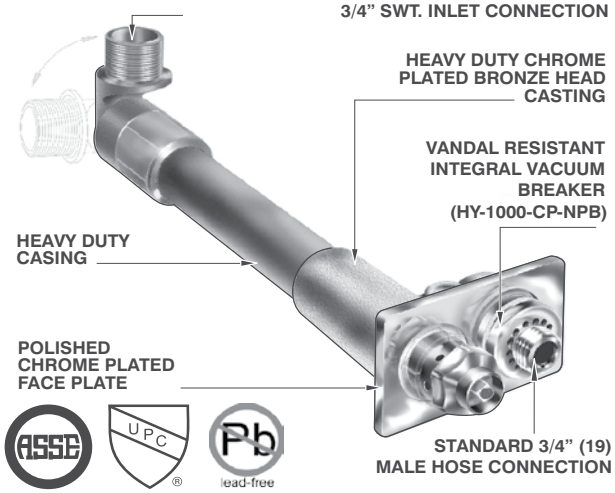

The wetted surface contacted by consumable water contains less than one quarter of one percent (0.25%) of lead by weight.

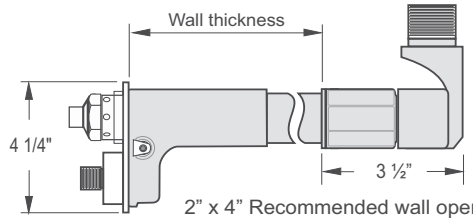

MHY-15 & 16 NON-FREEZE EXPOSED WALL HYDRANT, ANTI SIPHON, AUTOMATIC DRAINING

MODEL NUMBER	WALL. THICKNESS (in)	WEIGHT Lbs.	LIST PRICE
MHY-15-4,6,8	4-6-8	5	$ 1507.00
MHY-15-10,12,14	10-12-14	6	$ 1630.00
MHY-15-16,18	16-18	7	$ 1816.00
MHY-15-20, 22, 24	20-22-24	8	$ 2365.00
MHY-15-26, 30	26-30	9	$ 3282.00
MHY-16-4,6,8	4,6,8	5	$ 1146.00
MHY-16,10,12,14	10-12-14	6	$ 1217.00
MHY-16-16, 18	16-18	7	$ 1333.00
MHY-16-20, 22, 24	20-22-24	8	$ 1442.00
MHY-16-26, 30	26-30	9	$ 1707.00
(HY-1600-3 deeper box req.)			

MHY-10

MODEL NUMBER	WALL. THICKNESS (in)	WEIGHT Lbs.	LIST PRICE
MHY-10-4,6,8	4-6-8	6	$ 1902.00
MHY-10-10,12,14	10-12-14	8	$ 2033.00
MHY-10-16,18	16-18	10	$ 2216.00
MHY-10-20,22,24	20-22-24	12	$ 2365.00

MHY-10,15,16 OPTIONAL VARIATIONS:

SUFFIX	DESCRIPTION	LIST PRICE
-O	1" Hose Connection (HY-HC1)	$ 292.00
MHY-CIA-18-A	Hydrant Repair Kit	$ 436.00
-WC	Wall clamp (HY-HO1)	No Add
-DVB	Chrome Plated Double Check Vacuum Breaker (MHY-9006-CP)	$ 350.00
	(HY-1600-3 deeper box req.)	No Add

MHY-20 TO MHY-26 NON-FREEZE ENCASED WALL HYDRANT WITH SELF DRAINING VACUUM BREAKER MHY-20 TO MHY-26

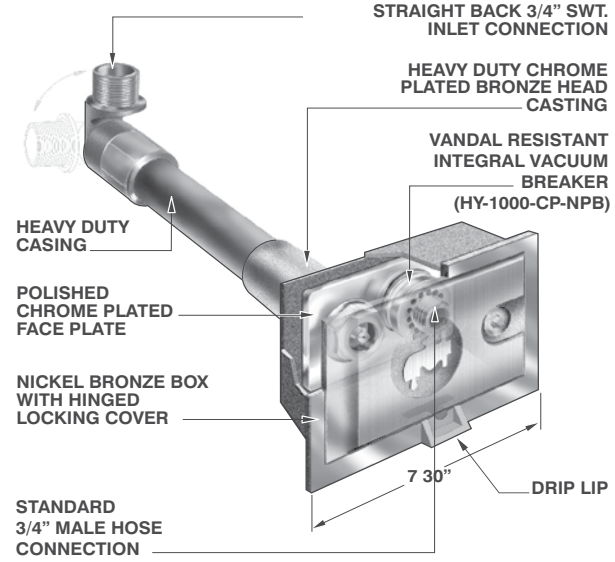

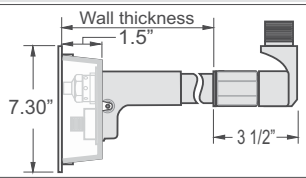

lead-free

The wetted surface contacted by consumable water contains less than one quarter of one percent (0.25%) of lead by weight.

MHY-25 AND 26 NON-FREEZE ENCASED WALL HYDRANT, ANTI SIPHON, AUTOMATIC DRAINING

MODEL NUMBER	WALL. THICKNESS (in)	WEIGHT Lbs.	LIST PRICE
MHY-25-6,8	6-8	8	$ 2595.00
MHY-25-10,12,14	10, 12, 14	9	$ 2720.00
MHY-25-16,18	16-18	10	$ 2914.00
MHY-25-20, 22, 24	20, 22, 24	11	$ 3047.00
MHY-26-6,8	6, 8	8	$ 2039.00
MHY-26,10,12,14	10, 12, 14	9	$ 2111.00
MHY-26-16, 18	16, 18	10	$ 2226.00
MHY-26-20, 22, 24	20, 22, 24	11	$ 2335.00

MHY-20

MODEL NUMBER	WALL. THICKNESS (in)	WEIGHT Lbs.	LIST PRICE
MHY-20-6,8	6-8	8	$ 3605.00
MHY-20-10,12,14	10-12-14	9	$ 3711.00
MHY-20-16,18	16-18	10	$ 3889.00
MHY-20-20,22, 24	20-22-24	12	$ 4077.00

MHY-20, 25, 26 OPTIONAL VARIATIONS:

SUFFIX	DESCRIPTION	LIST PRICE
-O	1" Hose Connection (HY-HC1)	$ 292.00
-1	Cast Nickel Bronze Box (HY-1500-1)	Standard
-3	Cast Type 304 Stainless steel box (HY-1500-3)	No Add
-49	Cast Chrome Plated box (HY-1500-49)	$ 410.00
-K	Cylinder key lock (RETRO-C)	$ 249.00
-S	1" x 1/4" Slots (4 on top & bottom), (2 on sides) Includes 3 mounting brackets (HY-PC)	No Add
MHY-CIA-18-A	Hydrant Repair Kit	$ 436.00
-RB	Fabricated stainless steel hydrant box with round back for tilt up construction (MHY-3-RB-5 7/8" round back with 2" x 3.81" rectangular opening to receive hydrant)	No Add
-WC	Wall clamp (HY-HO1)	No Add
-DVB	Chrome Plated Double Check Vacuum Breaker (MHY-9006-CP)	$ 350.00
	(HY-1600-3 deeper box req.)	No Add

Design and dimensions are subject to modification. Prices do not include applicable taxes. Visit **www.mifab.com** for the most recent product information.
MIFAB®, Inc., 1321 West 119th Street, Chicago, Illinois 60643-5109, USA Toll Free: 1-800-465-2736 • Fax: 1-773-341-3049
All sales subject to MIFAB's® Terms & Warranties. Please refer to inside front cover. sales@mifab.com • Canada Toll Free: 1-800-387-3880

MHY-30 MODERATE CLIMATE EXPOSED WALL HYDRANT MHY-30

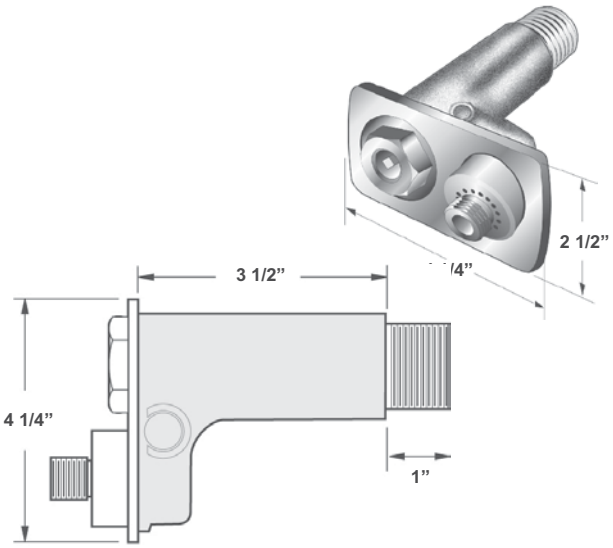

The wetted surface contacted by consumable water contains less than one quarter of one percent (0.25%) of lead by weight.

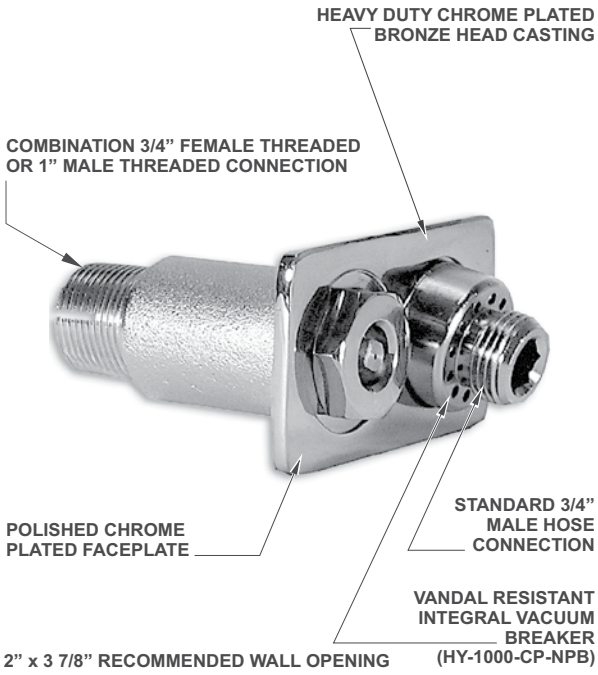

MODEL NO.	WT Lbs.	DESCRIPTION	LIST PRICE
MHY-30	3.00	4 1/2" Overall Length	$ 937.00

MHY-30 OPTIONAL VARIATIONS:

SUFFIX	DESCRIPTION	LIST PRICE
MHY-CIA-30/50	Hydrant Repair Kit	$ 436.00
-O	1" Hose Connection (HY-HC1)	$ 292.00
-WC	Wall Clamp (HY-H01)	No Add

MHY-35 MODERATE CLIMATE ENCASED WALL HYDRANT MHY-35

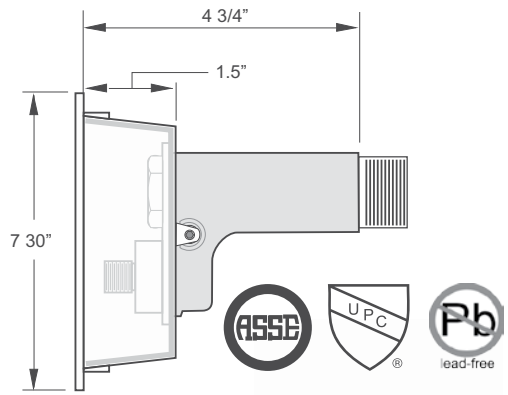

The wetted surface contacted by consumable water contains less than one quarter of one percent (0.25%) of lead by weight.

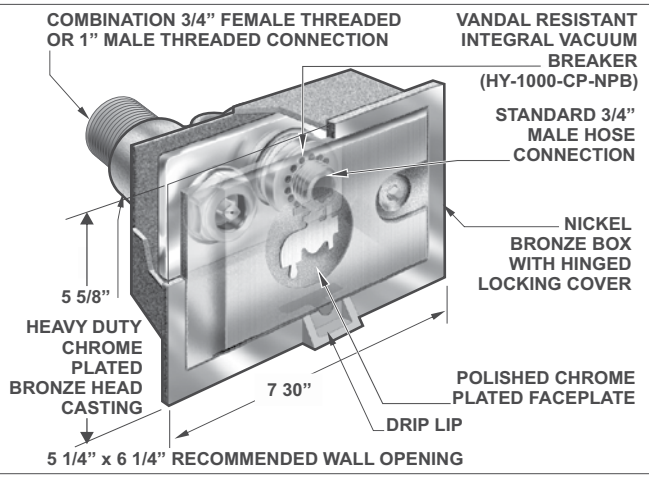

MODEL NO.	WT Lbs.	DESCRIPTION	LIST PRICE
MHY-35	6.50	4 3/4" Overall Depth	$ 1849.00

MHY-35 OPTIONAL VARIATIONS:

SUFFIX	DESCRIPTION	LIST PRICE	SUFFIX	DESCRIPTION	LIST PRICE
-O	1" Hose Connection (HY-HC1)	$ 292.00	-K	Cylinder key lock (RETRO-C)	$ 249.00
-1	Cast Nickel Bronze Box (HY-1500-1)	Standard	MHY-CIA-30/50	Hydrant Repair Kit	$ 436.00
-3	Cast Type 304 Stainless steel box (HY-1500-3)	No Add	-RB	Fabricated stainless steel hydrant box with round back for tilt up construction (MHY-3-RB-5 7/8" round back with 2" x 3.81" rectangular opening to receive hydrant)	No Add
-49	Cast Chrome Plated box (HY-1500-49)	$ 410.00			
-S	1" x 1/4" Slots in box (2 on top & bottom), 2 on sides) Includes 3 mounting brackets (HY-PC)	No Add	-WC	Wall Clamp (HY-H01)	No Add

HYDRANTS

MHY-40 NON-FREEZE DUAL TEMPERATURE (HOT & COLD) WALL HYDRANT MHY-40

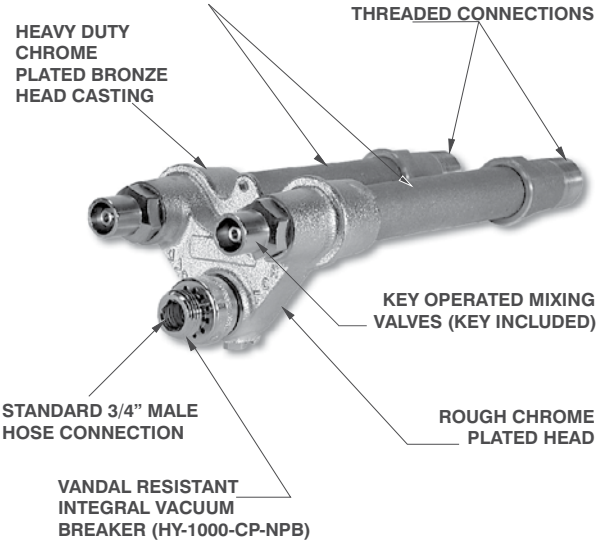

Overhead view

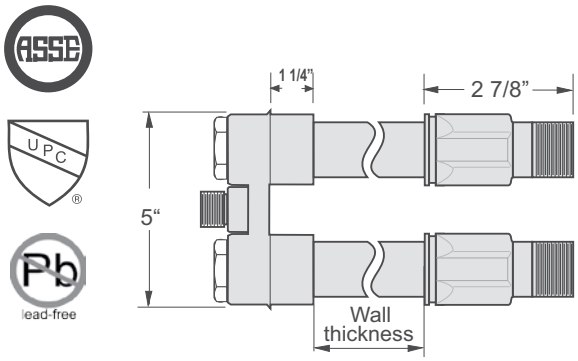

The wetted surface contacted by consumable water contains less than one quarter of one percent (0.25%) of lead by weight.

MHY-40 SERIES:

MODEL NO.	WALL THICKNESS (IN)	WT Lbs.	LIST PRICE
MHY-40-4,6,8	4-6-8	8.00	$ 4278.00
MHY-40-10,12,14	10-12-14	10.00	$ 4423.00
MHY-40-16,18	16-18	12.00	$ 4888.00
MHY-40-20,24	20-24	16.00	$ 5180.00

Note: 2 Kits required per hydrant.

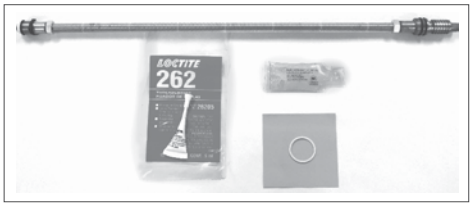

MHY-40 OPTIONAL VARIATIONS:

SUFFIX	DESCRIPTION	LIST PRICE	SUFFIX	DESCRIPTION	LIST PRICE
-0	1" Hose Connection (HY-HC1)	$ 292.00	MHY-CIA-4000	Hydrant Repair Kit (2 required)	$ 741.00
-6	3/4" IPS 90 degree elbow and union nut	$ 125.00	-WC	Wall clamp (HY-HO1)	No Add

MHY-45 NON-FREEZE ENCASED DUAL TEMP WALL HYDRANT MHY-45

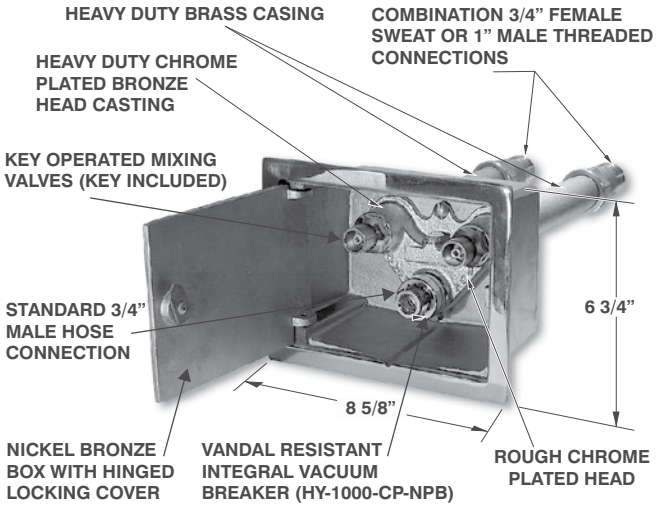

7 5/8" x 5 3/4" RECOMMENDED WALL OPENING

Overhead view

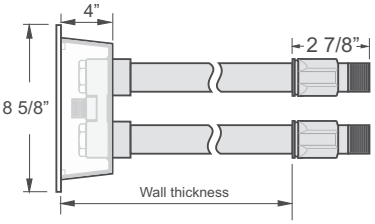

The wetted surface contacted by consumable water contains less than one quarter of one percent (0.25%) of lead by weight.

lead-free

MHY-45 SERIES:

MODEL NO.	WALL THICKNESS (IN)	WT Lbs.	LIST PRICE
MHY-45-8	8	18.00	$ 5239.00
MHY-45-10,12,14	10-12-14	20.00	$ 5383.00
MHY-45-16,18	16-18	22.00	$ 5849.00
MHY-45-20,24	20-24	26.00	$ 6140.00

MHY-45 OPTIONAL VARIATIONS:

SUFFIX	DESCRIPTION	LIST PRICE	SUFFIX	DESCRIPTION	LIST PRICE
-0	1" Hose Connection (HY-HC1)	$ 292.00	-K	Cylinder key lock (RETRO-C)	$ 249.00
-5	3/4" Female solder adapter	No Add	MHY-CIA-4000	Hydrant Repair Kit (2 required)	$ 741.00
-6	3/4" IPS 90 degree elbow and union nut	$ 125.00	-WC	Wall clamp (HY-HO1)	No Add
-49	Cast Chrome Plated box (HY-4100-49)	$ 459.00			

Design and dimensions are subject to modification. Prices do not include applicable taxes. Visit **www.mifab.com** for the most recent product information.
MIFAB®, Inc., 1321 West 119th Street, Chicago, Illinois 60643-5109, USA Toll Free: 1-800-465-2736 • Fax: 1-773-341-3049
All sales subject to MIFAB's® Terms & Warranties. Please refer to inside front cover. sales@mifab.com • Canada Toll Free: 1-800-387-3880

MHY-50 MODERATE CLIMATE NARROW WALL HYDRANT MHY-50

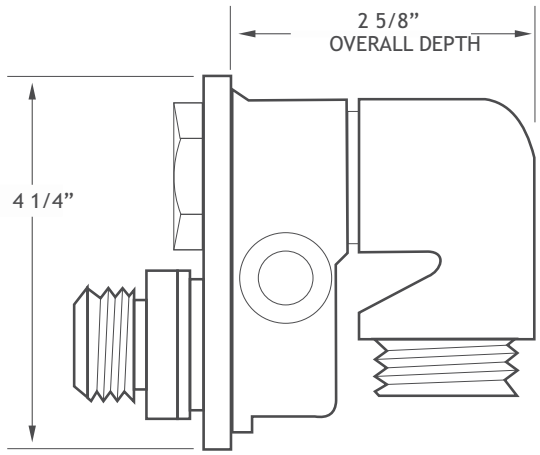

The wetted surface contacted by consumable water contains less than one quarter of one percent (0.25%) of lead by weight.

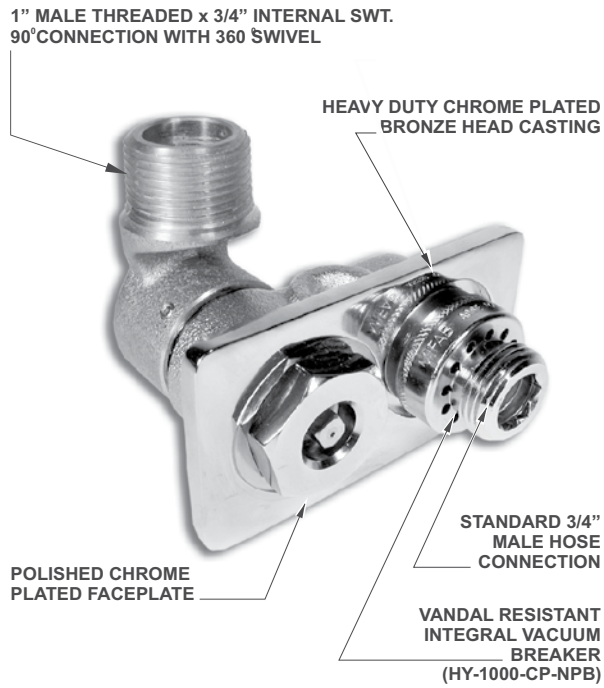

	WT Lbs.	DESCRIPTION	LIST PRICE
MHY-50	3.25	2 5/8” Overall Depth	$ 937.00

MHY-50 OPTIONAL VARIATIONS:

SUFFIX	DESCRIPTION	LIST PRICE
MHY-CIA-30/50	Hydrant Repair Kit	$ 436.00
-O	1” Hose Connection (HY-HC1)	$ 292.00

MHY-55 MODERATE CLIMATE ENCASED NARROW WALL HYDRANT MHY-55

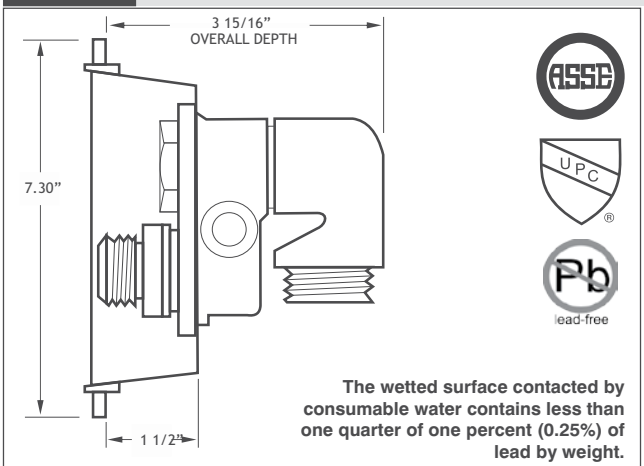

The wetted surface contacted by consumable water contains less than one quarter of one percent (0.25%) of lead by weight.

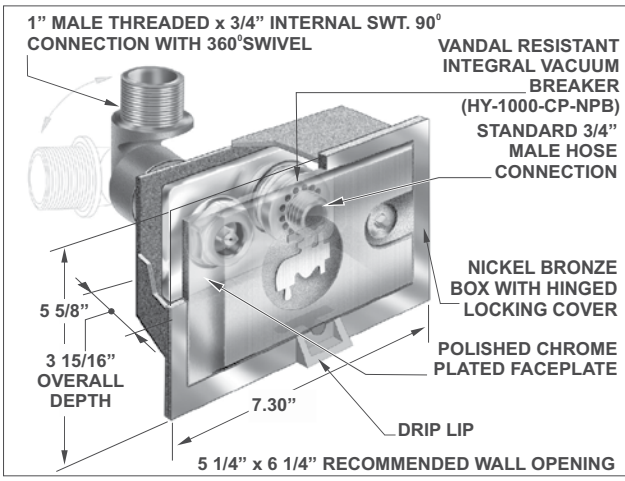

MODEL NO.	WT Lbs.	DESCRIPTION	LIST PRICE
MHY-55	7.00	3 15/16” Overall Depth	$ 1644.00

MHY-55 OPTIONAL VARIATIONS:

SUFFIX	DESCRIPTION	LIST PRICE	SUFFIX	DESCRIPTION	LIST PRICE
-O	1" Hose Connection (HY-HC1)	$ 292.00	-S	1” x 1/4” Slots (4 on top & bottom),	No Add
-3	Cast Type 304 Stainless steel box (HY-1500-3)	No Add	-RB	2 on sides) Includes 3 mounting brackets (HY-PC) Fabricated stainless steel hydrant box with round back for tilt up construction (MHY-3-RB-5 7/8" round back with 2" x 3.81" rectangular opening to receive hydrant)	No Add
-49	Cast Chrome Plated box (HY-1500-49)	$ 410.00			
-K	Cylinder key lock (RETRO-C)	$ 249.00			
			MHY-CIA-30/50	Hydrant Repair Kit	$ 436.00
			-WC	Wall clamp (HY-HO1)	No Add

HYDRANTS

MHY-15 CAST BOX FOR MHY-10,30,50 & 60 SERIES HYDRANTS MHY-15

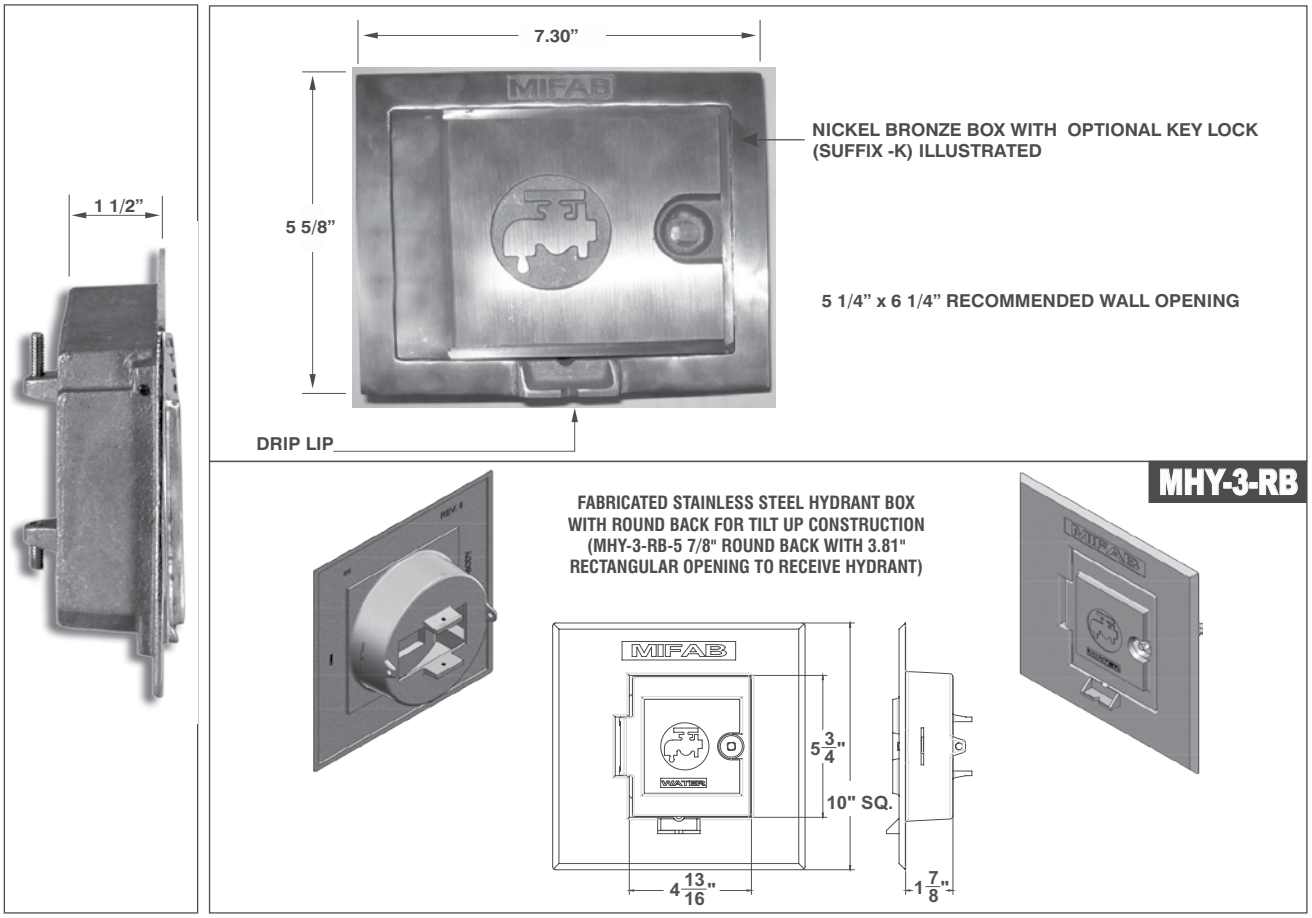

PART NO.	PRODUCT MATERIAL (CASTING) & FINISH	DESCRIPTION	LIST PRICE (-1,-3)	LIST PRICE (-49)
MHY-15-(1,3,49)*	NB or SS or Chrome plated	Standard Box for MHY-10 through (MHY-55) Series (except MHY-40,45)	$ 923.00	$ 1333.00
MHY-15-(1,3,49)-S*	NB or SS or Chrome plated	Standard Box for MHY-10 through (MHY-55) Series (except MHY-40,45)	$ 1187.00	$ 1596.00
		for MHY-10 through MHY-50 Series (suffix -S is for brackets to secure box to studs)		
MHY-15-(1,3,49)-NL*	NB or SS or Chrome plated	No lip box for MHY-60 Series	$ 923.00	$ 1333.00
MHY-3-RB	Fabricated Type 304 Stainless Steel	Fabricated stainless steel Box with 5 7/8" round back opening for tilt up construction (with 2" x 3.81" rectangular opening to receive hydrant)	$ 923.00	N/A

*Add a cylinder key lock to any of the above hydrant boxes by specifying **SUFFIX-K** in the part number and adding **$249.00** to the **LIST PRICE**

MHY-15-RECT RECTANGULAR HYDRANT BOX FOR MHY-10, 30, 50 & 55 SERIES HYDRANTS MHY-15-RECT

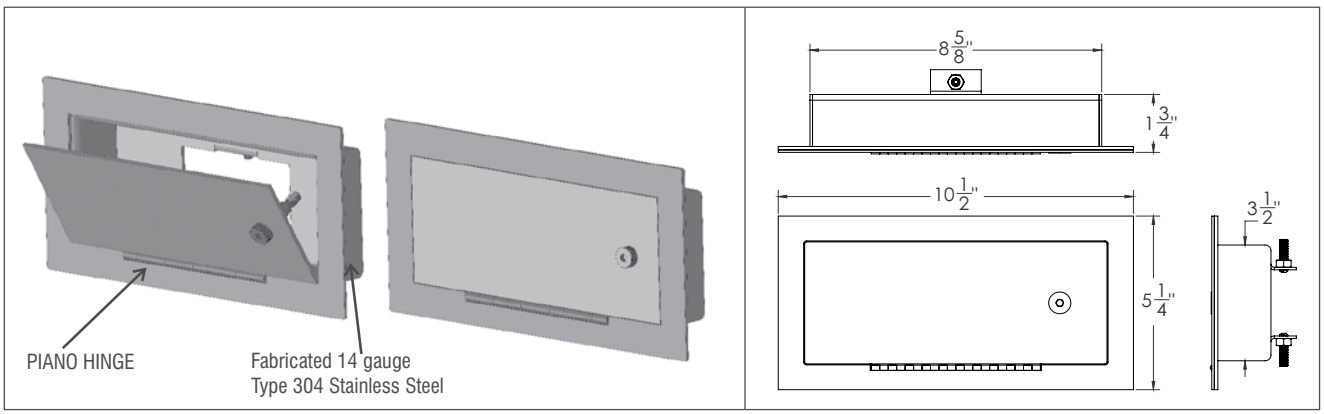

PART NO.	DESCRIPTION	LIST PRICE
MHY-15-RECT	Rectangular, stainless steel (Type 304) fabricated hydrant box for the MHY-10 through MHY-55 (except MHY-40, 45) Series	$ 923.00

Design and dimensions are subject to modification. Prices do not include applicable taxes. Visit **www.mifab.com** for the most recent product information.
MIFAB®, Inc., 1321 West 119th Street, Chicago, Illinois 60643-5109, USA Toll Free: 1-800-465-2736 • Fax: 1-773-341-3049
All sales subject to MIFAB's® Terms & Warranties. Please refer to inside front cover. sales@mifab.com • Canada Toll Free: 1-800-387-3880

MHY-58 ROOF HYDRANT

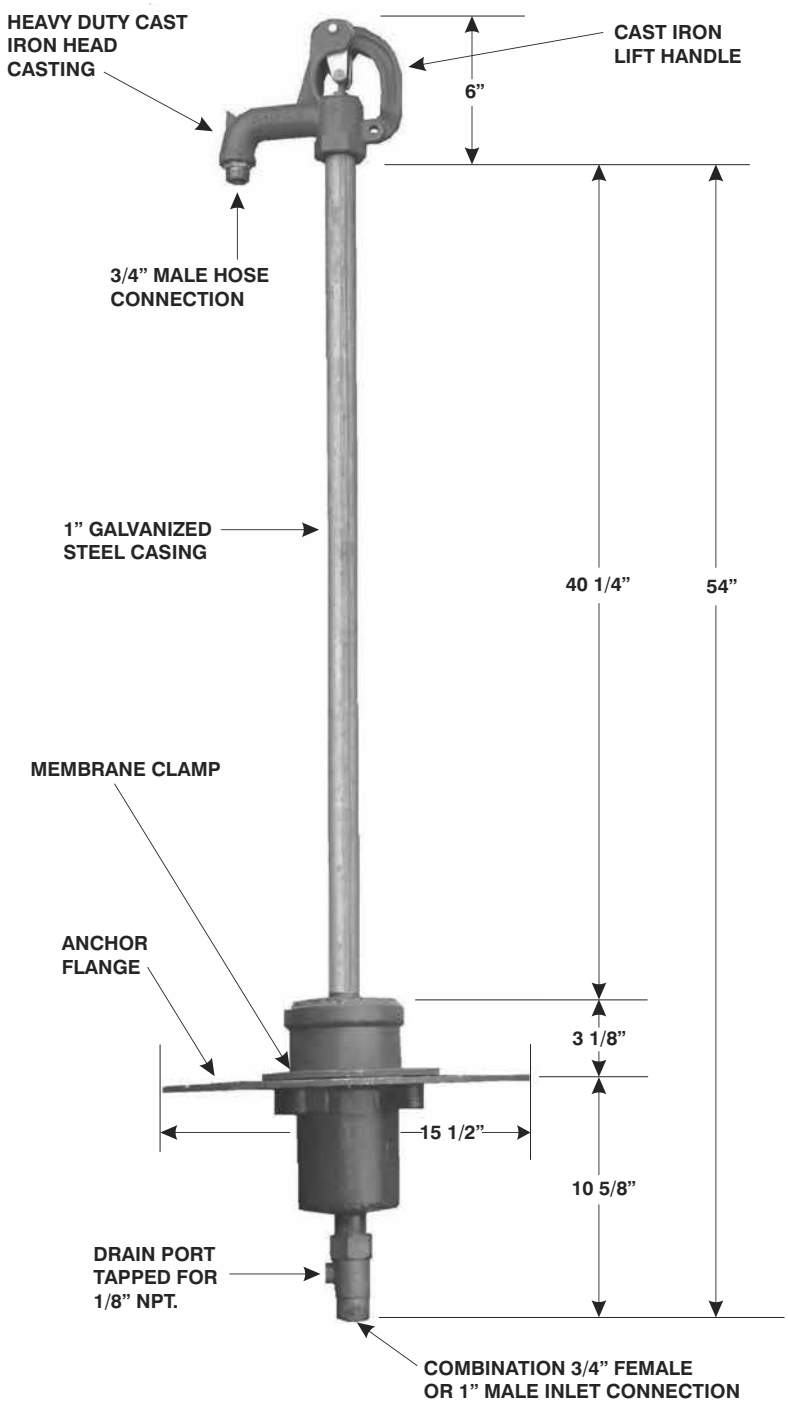

CUSTOM HEIGHTS AVAILABLE. PLEASE CONTACT CUSTOMER SERVICE.

MODEL NO.	DESCRIPTION	LIST PRICE
MHY-58	Roof hydrant	$ 4186.00

MHY-58 OPTIONAL VARIATIONS

SUFFIX	DESCRIPTION	LIST PRICE
-0	1" Hose Connection (HY-HC1)	$ 292.00
-8	3/4" Adapter Vacuum Breaker (HY-9005-CP-NPB)	$ 186.00
-42	Decorative Casing Guard (HY-6500-PCG)	$ 292.00
-MHY-68-RK	Repair kit (Gasket and o-rings only)	$ 325.00

HYDRANTS

MHY-60 NON-FREEZE ENCASED GROUND HYDRANT MHY-60

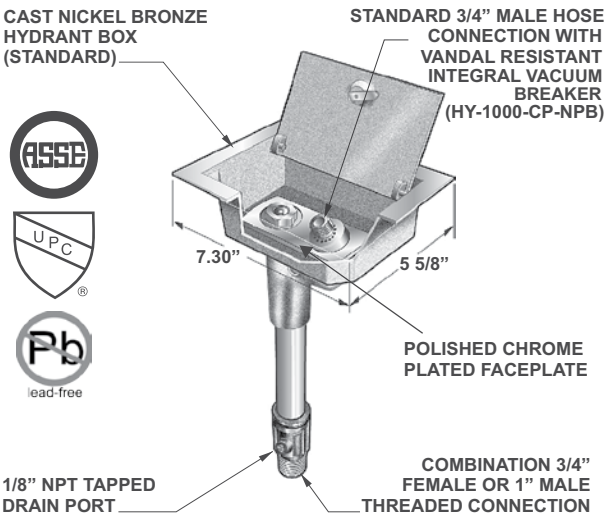

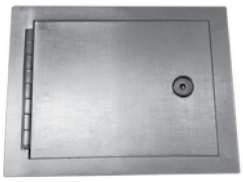

Overhead view of the fabricated stainless ground hydrant box (Suffix -3)

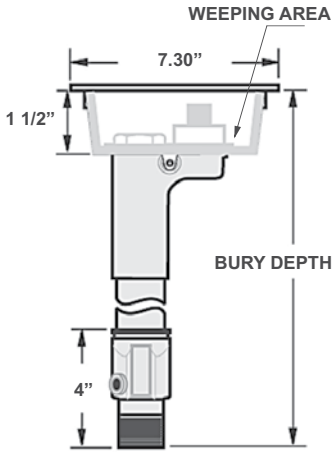

The wetted surface contacted by consumable water contains less than one quarter of one percent (0.25%) of lead by weight.

MODEL NUMBER	BURY DEPTH (Ft)	WEIGHT	LIST PRICE 3/4" HOSE CONNECTION
MHY-60-1	1	10	$ 2,737.00
MHY-60-2	2	13	$ 2,737.00
MHY-60-3	3	16	$ 2,936.00
MHY-60-4	4	19	$ 3,145.00
MHY-60-5	5	22	$ 3,369.00
MHY-60-6	6	25	$ 3,572.00
MHY-60-7	7	28	$ 3,779.00
MHY-60-8	8	31	$ 3,986.00
MHY-60-9	9	34	$ 4,207.00
MHY-60-10	10	37	$ 4,405.00

MHY-60 OPTIONAL VARIATIONS:

SUFFIX	DESCRIPTION	LIST PRICE
-0	1" Hose Connection (HY-HC1)	$ 292.00
-3	Type 304 Stainless steel box (HY-1500-3-NL)	No Add
-9	1/4" Drain Port in Box	$ 234.00
-10	3/8" Drain Port in Box	$ 234.00
-11	1/2" Drain Port in Box	$ 234.00
-49	Cast Chrome Plated box (HY-1500-NL-49)	$ 410.00
-FL	Membrane (Anchor) Flange (HY-PC)	$1,029.00
-FLM	Flange with clamp	$1,118.00
-HSB	Hose Storage Box (Epoxy coated steel)	$2,177.00
-K	Cylinder key lock (RETRO-C)	$ 249.00
-RK	Hydrant Repair Kit	$ 440.00

MHY-61 NON- FREEZE 1 1/4", 1 1/2" AND 2" ENCASED GROUND HYDRANT MHY-61

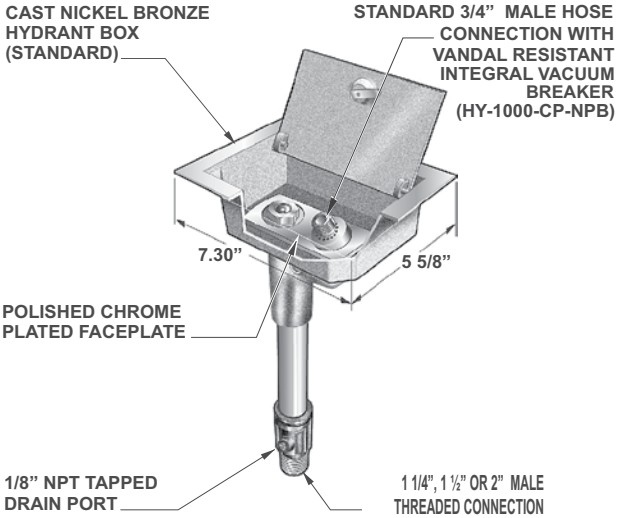

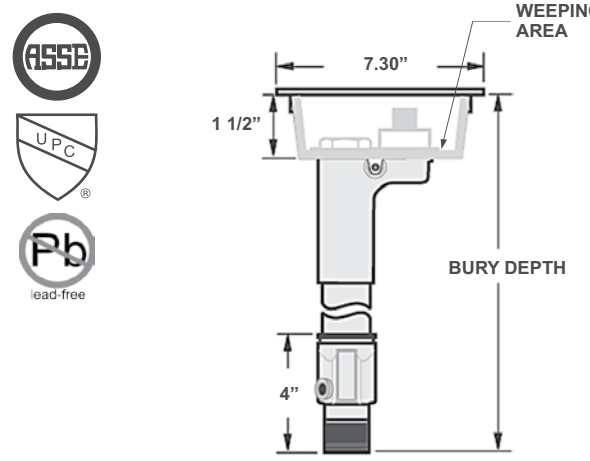

The wetted surface contacted by consumable water contains less than one quarter of one percent (0.25%) of lead by weight.

MODEL NUMBER	BURY DEPTH (Ft)	WEIGHT	LIST PRICE (-1.25) 1 1/4" BOTTOM INLET CONNECTION	LIST PRICE (-1.50) 1 1/2" BOTTOM INLET CONNECTION	LIST PRICE (-2.00) 2" BOTTOM INLET CONNECTION
MHY-61-2	2	43	$ 12,080.00	$ 13,254.00	$ 15,472.00
MHY-61-3	3	46	$ 12,468.00	$ 13,652.00	$ 15,866.00
MHY-61-4	4	49	$ 14,036.00	$ 14,039.00	$ 16,251.00
MHY-61-5	5	52	$ 14,780.00	$ 14,461.00	$ 16,678.00
MHY-61-6	6	55	$ 14,879.00	$ 14,879.00	$ 17,095.00
MHY-61-7	7	28	$ 17,730.00	$ 17,730.00	$ 17,730.00
MHY-61-8	8	31	$ 18,617.00	$ 18,617.00	$ 18,617.00

MHY-61 OPTIONAL VARIATIONS:

SUFFIX	DESCRIPTION	LIST PRICE
-3	Type 304 Stainless steel box (HY-1500-3-NL)	No Add
-9	1/4" Drain Port in Box	$ 234.00
-10	3/8" Drain Port in Box	$ 234.00
-11	1/2" Drain Port in Box	$ 234.00
-K	Cylinder key lock (RETRO-C)	$ 249.00
-RK	Hydrant Repair Kit	$ 440.00

MHY-65 NON-FREEZE 3/4" AND 1" POST HYDRANT

MHY-65

MHY-65 SERIES:			
MODEL NO.	BURY DEPTH (Ft)	WT Lbs.	LIST PRICE 3/4" HOSE CONNECTION
MHY-65-2	2	24.00	$ 2,773.00
MHY-65-3	3	28.00	$ 2,999.00
MHY-65-4	4	32.00	$ 3,227.00
MHY-65-5	5	36.00	$ 3,461.00
MHY-65-6	6	40.00	$ 3,698.00
MHY-65-7	7	44.00	$ 3,957.00
MHY-65-8	8	48.00	$ 4,204.00
MHY-65-9	9	52.00	$ 4,652.00
MHY-65-10	10	56.00	$ 4,920.00

MHY-66 SERIES: NON FREEZE 1 1/4", 1 1/2" AND 2" POST HYDRANT					
MODEL NO.	BURY DEPTH (Ft)	WT Lbs.	1 1/4" BOTTOM INLET CONNECTION (-1.25)	1 1/2" BOTTOM INLET CONNECTION (-1.50)	2" BOTTOM INLET CONNECTION (-2.00)
MHY-66-2	2	40.00	$ 6,823.00	$ 9,329.00	$ 11,693.00
MHY-66-3	3	61.00	$ 7,535.00	$ 10,036.00	$ 12,417.00
MHY-66-4	4	66.00	$ 8,214.00	$ 10,723.00	$ 13,098.00
MHY-66-5	5	71.00	$ 8,617.00	$ 11,122.00	$ 13,502.00
MHY-66-6	6	76.00	$ 9,013.00	$ 11,510.00	$ 13,895.00
MHY-66-7	7	81.00	$ 9,461.00	$ 11,963.00	$ 14,802.00
MHY-66-8	8	86.00	$ 9,923.00	$ 12,423.00	$ 14,804.00
MHY-66-9	9	91.00	$ 10,373.00	$ 12,883.00	$ 15,924.00
MHY-66-10	10	97.00	$ 11,032.00	$ 13,540.00	$ 17,226.00

MHY-65,66 OPTIONAL VARIATIONS:		
SUFFIX	DESCRIPTION	LIST PRICE
-0	1" Hose Connection (HY-HC1)	$ 772.00
-8	3/4" Adapter Vacuum Breaker (HY-9005-CP-NPB)	$ 184.00
-12	Wheel Handle (HY-9003)	$ 382.00
-42	Decorative Casing Guard (HY-6500-PCG)	$ 292.00
MHY-65-RK	Repair Kit	$ 536.00

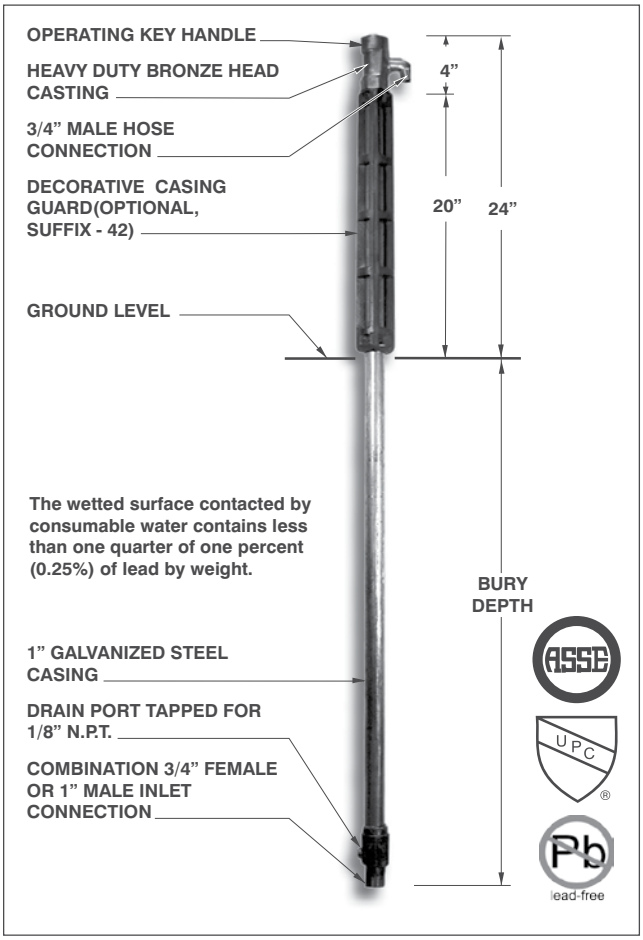

MHY-68 YARD HYDRANT WITH LIFT HANDLE AND GALVANIZED CASING

MHY-68

MHY-68 SERIES:				
MODEL NO.	BURY DEPTH (Ft)	WT Lbs.	OVERALL LENGTH (In)	3/4" HOSE CONNECTION
MHY-68-1	1	10.00	36"	$ 1,657.00
MHY-68-2	2	12.00	48"	$ 1,657.00
MHY-68-3	3	17.00	60"	$ 1,771.00
MHY-68-4	4	19.00	72"	$ 1,817.00
MHY-68-5	5	22.00	84"	$ 1,869.00
MHY-68-6	6	24.00	96"	$ 1,923.00
MHY-68-7	7	25.00	108"	$ 1,967.00
MHY-68-8	8	26.00	120"	$ 2,079.00

MHY-68 OPTIONAL VARIATIONS:		
SUFFIX	DESCRIPTION	LIST PRICE
-0	1" Hose Connection (HY-HC1)	$ 292.00
-8	3/4" Adapter Vacuum Breaker (HY-9005-CP-NPB)	$ 186.00
-42	Decorative Casing Guard (HY-6500-PCG)	$ 292.00
MHY-68-RK	Repair Kit	$ 536.00

The wetted surface contacted by consumable water contains less than one quarter of one percent (0.25%) of lead by weight.

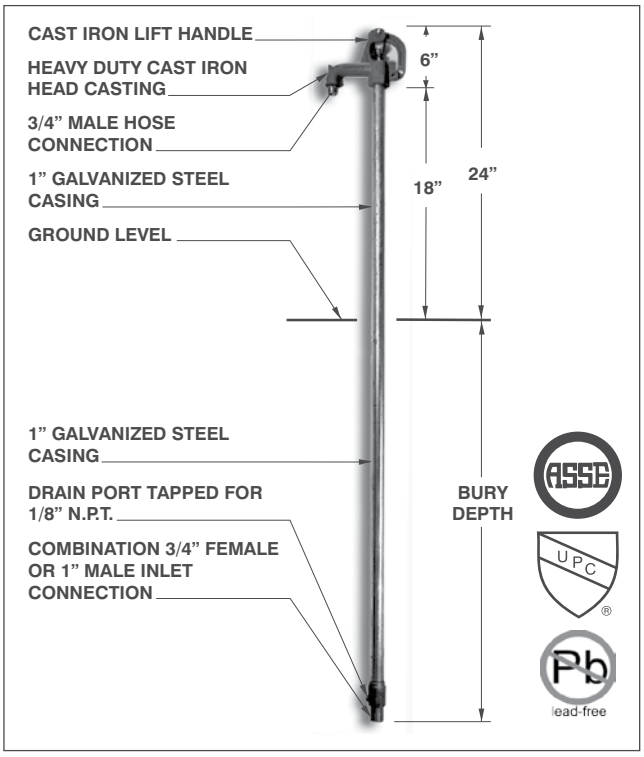

HYDRANTS

MHY-90 ROUGH BRASS SERIES MHY-90

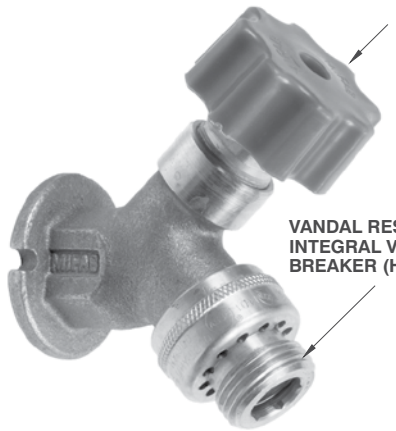

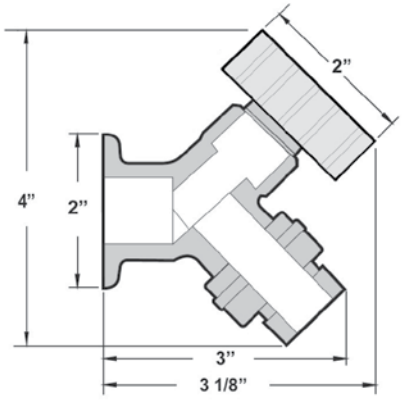

MHY-90 SERIES WALL FAUCET DIMENSIONS

ASSE
UPC®
Pb lead-free

The wetted surface contacted by consumable water contains less than one quarter of one percent (0.25%) of lead by weight.

MODEL NO.	PRODUCT FINISH	OPERATING DEVICE	CONNECTION	LIST PRICE
MHY-9040-NPB	Rough Brass	Operating loose tee key, cast iron wheel handle, brown plastic and clear plastic wheel handle all included	1/2" F.P.T.	**$ 527.00**
MHY-9041-NPB	Rough Brass	Operating loose tee key, cast iron wheel handle, brown plastic and clear plastic wheel handle all included	3/4" F.P.T.	**$ 527.00**

* Not for use with MHY-95 Series Wall Box

† Operating key also included in each box (HY-9004)

MHY-90 OPTIONAL VARIATIONS:

SUFFIX	DESCRIPTION	LIST PRICE	SUFFIX	DESCRIPTION	LIST PRICE
-B	Cast brass box	**$ 1159.00**	**-B-49**	Chrome plated cast brass box	**$ 1619.00**
-BK	Cast brass box with cylinder lock	**$ 1408.00**	**-BK-49**	Chrome plated cast brass box with cyl. lock	**$ 1868.00**

MHY-CIA-18-A HYDRANT REPAIR KIT FOR MHY-10, 15, 16, 20, 25 and 26 HYDRANTS MHY-CIA-18-A

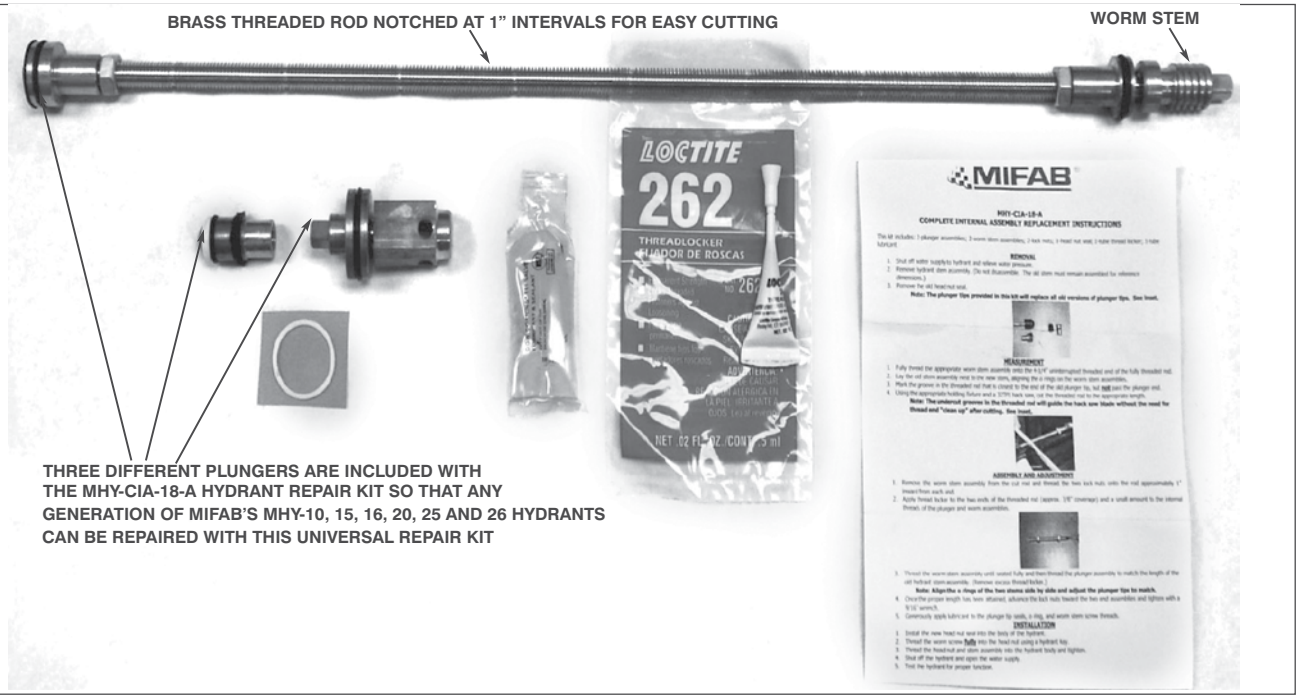

PART NO.	DESCRIPTION	LIST PRICE
MHY-CIA-18-A	Hydrant repair kit for **MHY-10, 15, 16, 20, 25** and **26** Hydrants (Up to 18" size only)	**$ 436.00**

Note: For longer than 18" use HY-1000-RK-ROD-24 repair kit **- $ 714.00**

Design and dimensions are subject to modification. Prices do not include applicable taxes. Visit **www.mifab.com** for the most recent product information.
MIFAB®, Inc., 1321 West 119th Street, Chicago, Illinois 60643-5109, USA
Toll Free: 1-800-465-2736 • Fax: 1-773-341-3049
sales@mifab.com • Canada Toll Free: 1-800-387-3880
All sales subject to MIFAB's® Terms & Warranties. Please refer to inside front cover.

MHY-92 POLISHED CHROME PLATED SERIES

MHY-92

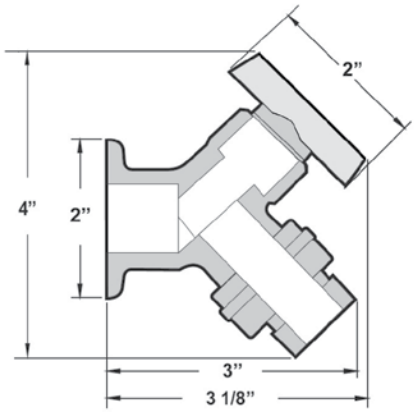

MHY-92 SERIES WALL FAUCET DIMENSIONS

ASSE
UPC
Pb lead-free

The wetted surface contacted by consumable water contains less than one quarter of one percent (0.25%) of lead by weight.

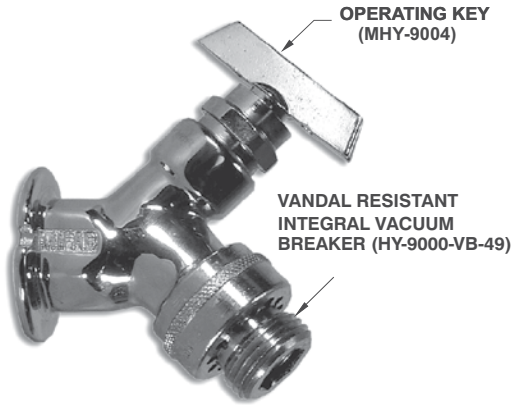

MODEL NO.	PRODUCT FINISH	OPERATING DEVICE	CONNECTION	LIST PRICE
MHY-9240-NPB	Polished Chrome Plated	Operating loose tee key, cast iron wheel handle, brown plastic and clear plastic wheel handle all included	1/2" F.P.T.	$ **582.00**
MHY-9241-NPB	Polished Chrome Plated	Operating loose tee key, cast iron wheel handle, brown plastic and clear plastic wheel handle all included	3/4" F.P.T.	$ **582.00**

* Not for use with MHY-95 Series Wall Box

† Operating key also included in each box (HY-9004)

MHY-92 OPTIONAL VARIATIONS:

SUFFIX	DESCRIPTION	LIST PRICE	SUFFIX	DESCRIPTION	LIST PRICE
-B	Cast brass box	$ **1159.00**	**-B-49**	Chrome plated cast brass box	$ **1619.00**
-BK	Cast brass box with cylinder lock	$ **1408.00**	**-BK-49**	Chrome plated cast brass box with cyl. lock	$ **1868.00**

MHY-95 FLUSH MOUNTED WALL BOX SERIES

MHY-95

MHY-95 Series is not intended for use with the Cast Iron Wheel Handle Hydrants.

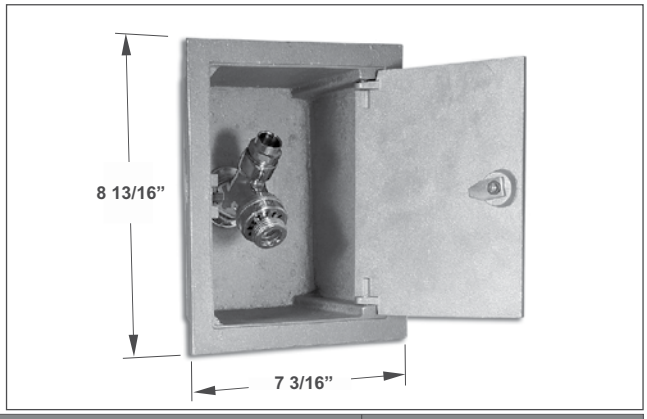

Recommended wall opening: 7 3/4" x 6 1/8" overall depth: 3 3/4"

MODEL NO.	PRODUCT FINISH	DESCRIPTION	ADD TO MHY-90 OR 92 LIST PRICE
MHY-95-B	Cast Brass	Cast Brass Box	$ **1159.00**
MHY-95-B-49	Chrome plated Cast Brass	Chrome Plated Box	$ **1619.00**
MHY-95-BK	Cast Brass	Cast Brass Box with Cylinder Key Lock	$ **1408.00**
MHY-95-BK-49	Chrome plated Cast Brass	Chrome Plated with Cylinder Key Lock	$ **1868.00**

* Add to the following list prices: **MHY-90 $ 527.00.00**, for **MHY-92 $ 582.00**

MHY-90 SERIES REPLACEMENT PARTS

MODEL NO.	DESCRIPTION	LIST PRICE
MHY-9001	Brown plastic wheel handle	$ **161.00**
MHY-9002	Clear plastic wheel handle	$ **161.00**
MHY-9003	Cast iron wheel handle	$ **161.00**
MHY-9004	Operating key	$ **127.00**
HY-9000-VB	A.S.S.E. 1011 approved vacuum breaker - rough brass	$ **161.00**
HY-9000-VB-49	A.S.S.E. 1011 approved vacuum breaker - polished chrome	$ **204.00**

BV1000 CAST IRON HORIZONTAL BACKWATER VALVE WITH PVC FLAPPER BV1000

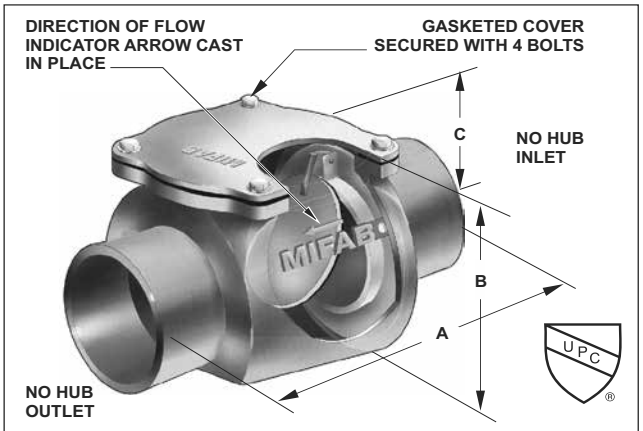

MODELS BV1002 THROUGH TO BV1006 ARE LISTED WITH I.A.P.M.O.

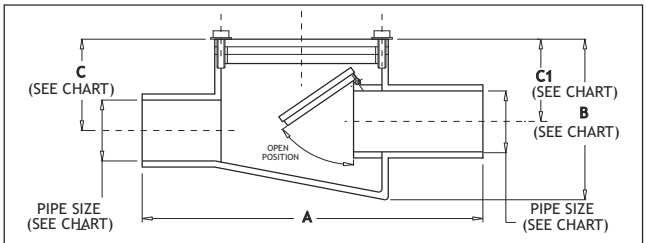

MODEL NUMBER	CONNECTION SIZE	LENGTH A	HEIGHT B	INVERT (OUTLET) C	INVERT (INLET) C1
BV1002	2" No hub	10 3/4"	5 1/2"	2.40"	2 1/8"
BV1003	3" No hub	11 3/4"	6 3/4"	3.40"	3 1/8"
BV1004	4" No hub	12 3/4"	7 1/2"	3 5/8"	3 1/2"
BV1006	6" No hub	14 3/4"	10"	5"	4 5/8"
BV1008	8" No hub	17"	12 1/4"	7"	6 1/2"
BV1010	10" No hub	23 5/8"	13 1/2"	7"	7 1/2"
BV1012	12" No hub	21 1/3"	17 1/2"	9 1/2"	10"

MODEL NUMBER	DESCRIPTION	WEIGHT (Lbs)	LIST PRICE
BV1002	2" No Hub, Cast Iron body, PVC flapper	15	$ 1,786.00
BV1003	3" No Hub, Cast Iron body, PVC flapper	25	$ 2,790.00
BV1004	4" No Hub, Cast Iron body, Stainless Steel flapper	32	$ 3,443.00
BV1006	6" No Hub, Cast Iron body, Stainless Steel flapper	55	$ 4,949.00
BV1008	8" No Hub, Cast Iron body, Stainless Steel flapper	80	$ 6,950.00
BV1010	10" No Hub, Cast Iron body, Bronze flapper	130	$ 11,342.00
BV1012	12" No Hub, Custom design that is supplied with acid resistant epoxy coated steel body with a stainless steel flapper.	140	$ 19,692.00

BV1000-CS EPOXY COATED HOUSING AND ACCESS COVER FOR BV1000

MODEL NUMBER	SIZE	WEIGHT (Lbs)	LIST PRICE
BV1000-CS	(2" - 10" only) Specify Depth (up to 30")	150.00	$ 16,591.00
	Add per inch over 30"	+22lbs/in	$ 106.00
BV1012-CS	(for 12" model) Specify Depth (up to 30")	175.00	$ 22,505.00
		+26lbs/in	$ 250.00

REPLACEMENT COVER GASKETS

MODEL NUMBER	DESCRIPTION	LIST PRICE
BV1002-GSK	Replacement cover gasket for the BV1002	$ 178.00
BV1003-GSK	Replacement cover gasket for the BV1003	$ 201.00
BV1004-GSK	Replacement cover gasket for the BV1004	$ 223.00
BV1006-GSK	Replacement cover gasket for the BV1006	$ 246.00
BV1008-GSK	Replacement cover gasket for the BV1008	$ 352.00
BV1010-GSK	Replacement cover gasket for the BV1010	$ 411.00

BV1000 OPTIONAL VARIATIONS:

SUFFIX	DESCRIPTION	LIST PRICE
-13	All galvanized (2", 3", 4")	$ 726.00
-13	All galvanized (6")	$ 1,208.00
-13	All galvanized (8" and 10")	$ 2,158.00
-13	All galvanized (12")	$ 3,751.00
-HS	Hub and spigot connection on inlet only	No Add

BV1200-R CAST IRON BACKWATER VALVE WITH FLOOR LEVEL NICKEL BRONZE ACCESS COVER BV1200-R

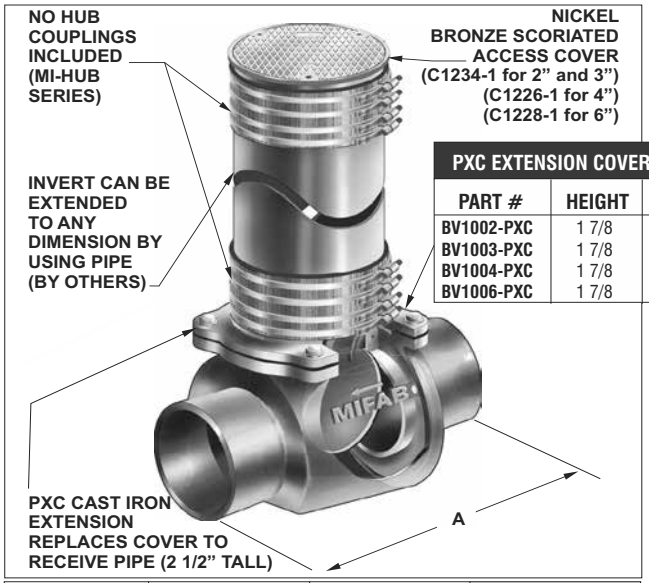

PXC EXTENSION COVERS

PART #	HEIGHT	OPENING
BV1002-PXC	1 7/8	4" NO HUB
BV1003-PXC	1 7/8	4" NO HUB
BV1004-PXC	1 7/8	6" NO HUB
BV1006-PXC	1 7/8	8" NO HUB

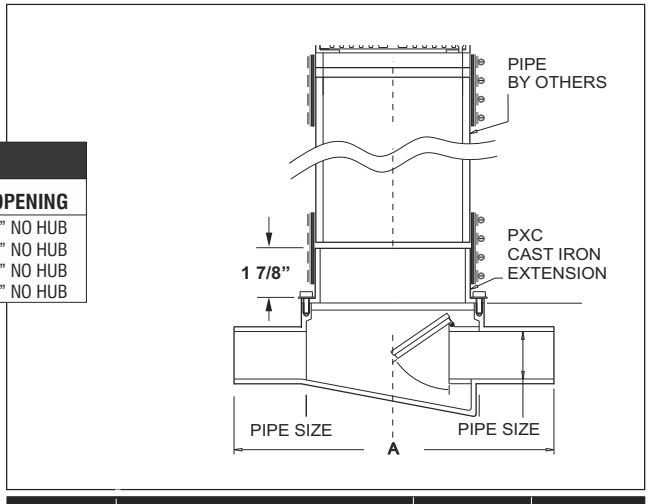

MODEL NUMBER	CONNECTION SIZE	WEIGHT (Lbs)	LIST PRICE
BV1202-R-1	2" No hub	23.00	$ 4,249.00
BV1203-R-1	3" No hub	30.00	$ 4,415.00
BV1204-R-1	4" No hub	37.00	$ 4,701.00
BV1206-R-1	6" No hub	56.00	$ 6,397.00
BV1208-R-1	8" No hub	80.00	$ 8,303.00
BV1210-R-1	10" No hub	115.00	$ 13,121.00
BV1212-R-1	12" No hub	170.00	$ 19,639.00

SIZE	MODEL NUMBER	PIPE SIZE	LENGTH A
2"	BV1202-R-1	2" No hub	10 3/4"
3"	BV1203-R-1	3" No hub	11 3/4"
4"	BV1204-R-1	4" No hub	12 3/4"
6"	BV1206-R-1	6" No hub	14 3/4"

BV1200-R OPTIONAL VARIATIONS:

SUFFIX	DESCRIPTION	LIST PRICE
-13	All galvanized	$ 1627.00
-HS	Hub and spigot connection on inlet only	No Add

Design and dimensions are subject to modification. Prices do not include applicable taxes. Visit www.mifab.com for the most recent product information.
MIFAB®, Inc., 1321 West 119th Street, Chicago, Illinois 60643-5109, USA Toll Free: 1-800-465-2736 • Fax: 1-773-341-3049
All sales subject to MIFAB's® Terms & Warranties. Please refer to inside front cover. sales@mifab.com • Canada Toll Free: 1-800-387-3880

BV1210 CAST IRON ANGLE PIT DRAIN WITH BACKWATER VALVE BV1210

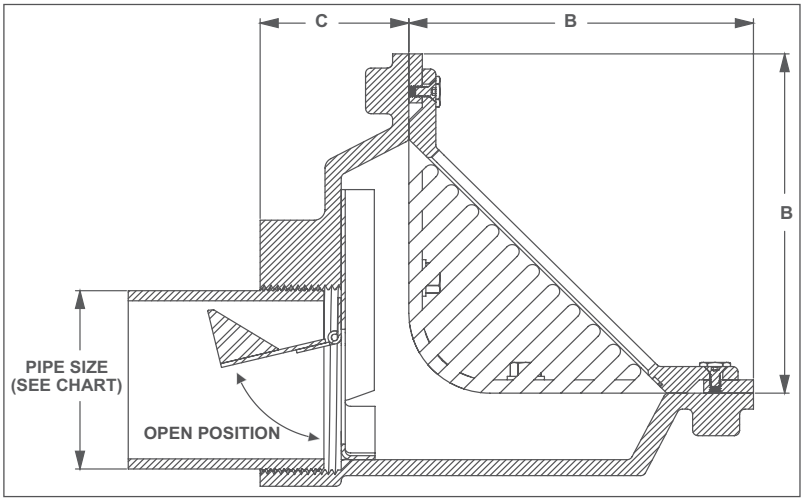

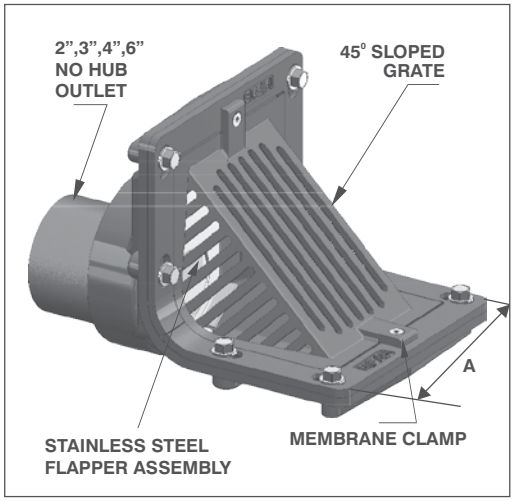

MODEL NO.	SIZE	WEIGHT (Lbs.)	C.I. BODY WITH C.I. GRATE (-50) LIST PRICE	C.I. BODY WITH N.B. GRATE & CLAMP (-1) LIST PRICE
BV1212,3,4	2", 3", 4" No hub	45.00	$ 2583.00	$ 3800.00
BV1216	6" No hub	55.00	$ 3885.00	$ 5098.00

MODEL NO.	A	B	C
BV1212,3,4	7 1/2" (191)	6 3/8" (162)	2 3/4" (70)
BV1216	12 1/2" (318)	8 3/8" (213)	3 1/2" (89)

BV1210 SERIES OPTIONAL VARIATIONS:

SUFFIX	DESCRIPTION	LIST PRICE	SUFFIX	DESCRIPTION	LIST PRICE
T	Threaded outlet (except 6")	No Add	-13	All galvanized (6")	$ 864.00
-6	Vandal proof grate (TR25 Torx and Pin)	$ 192.00	-83	Stainless steel mesh screen	$ 697.00
-13	All galvanized (2",3",4")	$ 860.00			

BV1250 BACKWATER VALVE WITH NEOPRENE SEAT BV1250

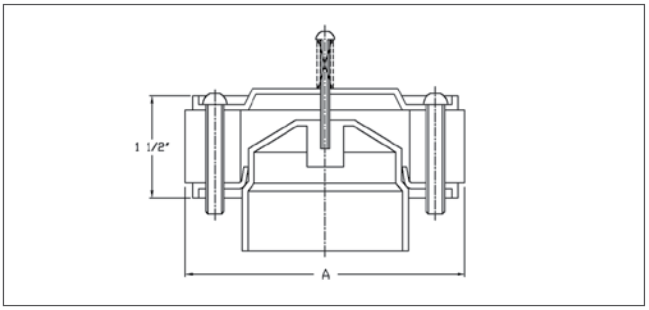

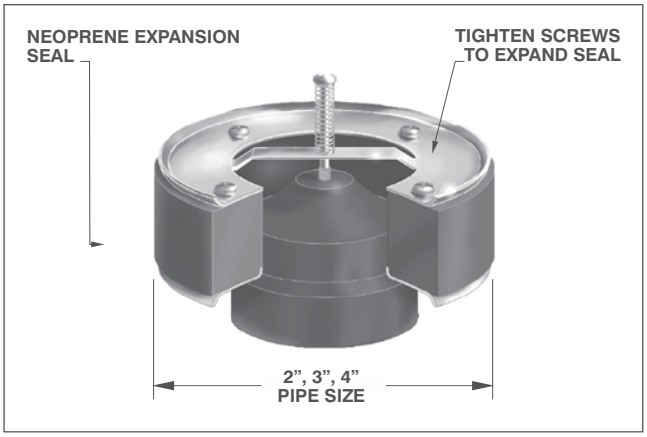

MODEL NO.	"A" PIPE SIZE	WEIGHT (Lbs.)	LIST PRICE
BV1252	2" No hub	1.50	$ 497.00
BV1253	3" No hub	2.00	$ 497.00
BV1254	4" No hub	2.50	$ 497.00

BV1260 VERTICAL CAST IRON BACKWATER VALVE WITH NEOPRENE SEAT BV1260

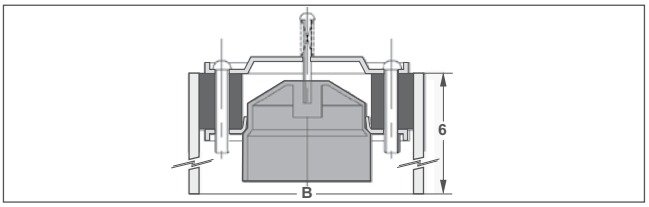

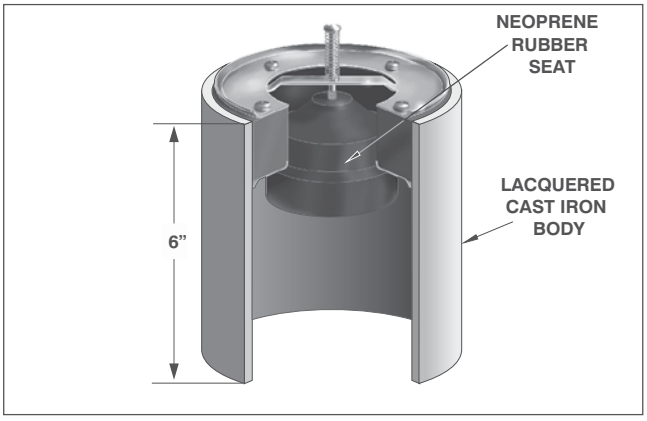

MODEL NO.	"A" PIPE SIZE	WEIGHT (Lbs.)	LIST PRICE
BV1262	2" No hub	10.00	$ 799.00
BV1263	3" No hub	15.00	$ 799.00
BV1264	4" No hub	20.00	$ 799.00

BV1260 OPTIONAL VARIATIONS:

SUFFIX	DESCRIPTION	LIST PRICE
-13	All galvanized (2", 3", 4")	$ 148.00

BV1280 TERMINAL VALVE

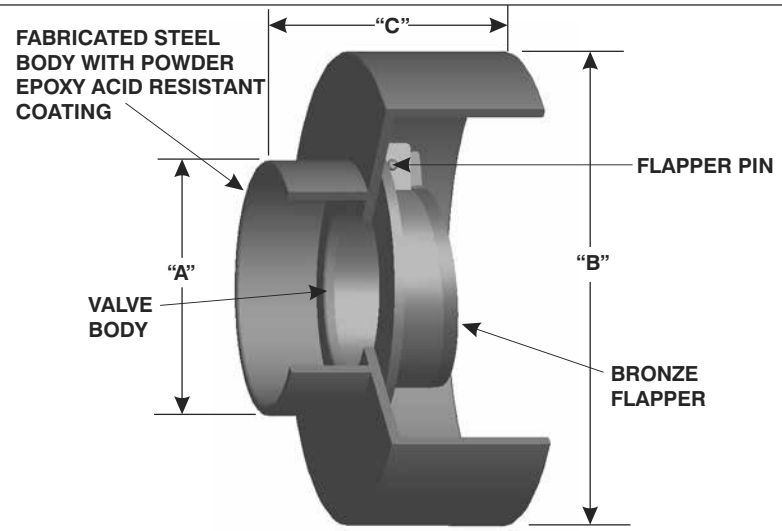

Note: The BV1280 terminal valve is used at the end of sewer lines to prevent backflow into areas that require draining.

MODEL NUMBER	WEIGHT (Lbs.)	"A" PIPE SIZE	"B" DIAMETER (No Hub Connection)	"C" LENGTH	LIST PRICE	ADD FOR -13 GALVANIZED BODY
BV1282	10	2"	6 1/4"	5 1/4"	$ 749.00	$ 424.00
BV1283	12	3"	8"	5 ½"	$ 749.00	$ 424.00
BV1284	15	4"	9"	5 3/4"	$ 1,089.00	$ 424.00
BV1285	20	5"	11 ½"	6"	$ 2,812.00	$ 599.00
BV1286	28	6"	11 ½"	6"	$ 3,094.00	$ 599.00
BV1288	42	8"	13 ½"	6 3/4"	$ 3,765.00	$ 1,235.00
BV1280-10	58	10"	15 3/4"	7 3/4"	$ 11,325.00	$ 1,235.00
BV1280-12	80	12"	17 ½"	8 3/4"	$ 12,803.00	$ 1,515.00
BV1280-16	120	16"	26 1/4"	16 ½"	$ 24,270.00	$ 2,362.00
BV1280-18	140	18"	26 1/4"	16"	$ 31,620.00	$ 3,543.00

BV1290 DRAIN TILE SUMP

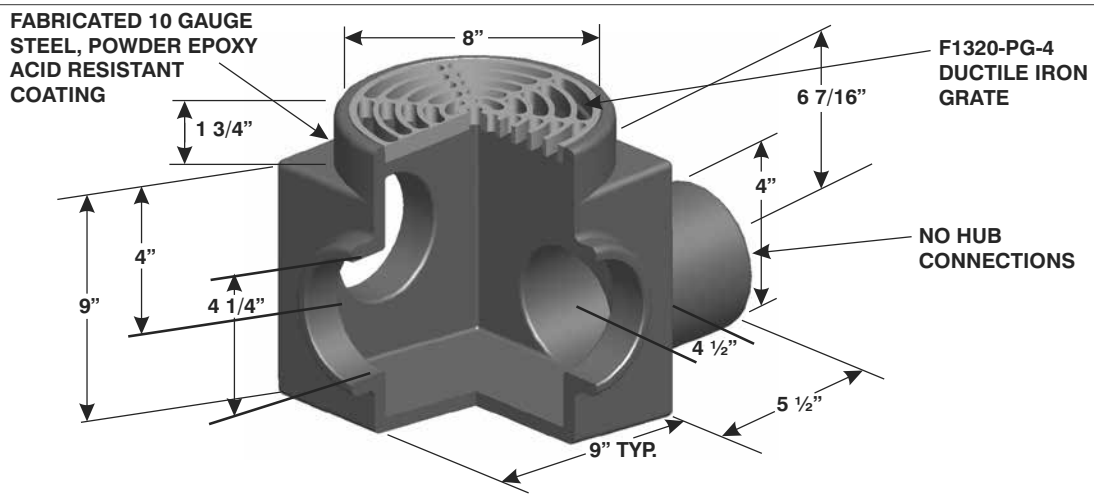

Note: The function of the BV1290 is to provide a sump with multiple inlets that the foundation drain lines connect to.

BV1290 OPTIONAL VARIATIONS:

SUFFIX	DESCRIPTION	LIST PRICE
-1	Nickel Bronze grate and frame (veneer)	$ 1,277.00
-3	Stainless Steel grate and frame (veneer)	$ 1,277.00
-13	All Galvanized	$ 922.00
-25	Solid cover	$ 323.00

MODEL NUMBER	WEIGHT (Lbs.)	FREE AREA SQUARE DRAIN	OUTLET SIZE	LIST PRICE
BV1294	50	14.25"	4"	$ 1,283.00

Design and dimensions are subject to modification. Prices do not include applicable taxes. Visit **www.mifab.com** for the most recent product information.
MIFAB®, Inc., 1321 West 119th Street, Chicago, Illinois 60643-5109, USA Toll Free: 1-800-465-2736 • Fax: 1-773-341-3049
All sales subject to MIFAB's® Terms & Warranties. Please refer to inside front cover. sales@mifab.com • Canada Toll Free: 1-800-387-3880

BV1300 MANUALLY OPERATED GATE TYPE BACKWATER VALVE BV1300

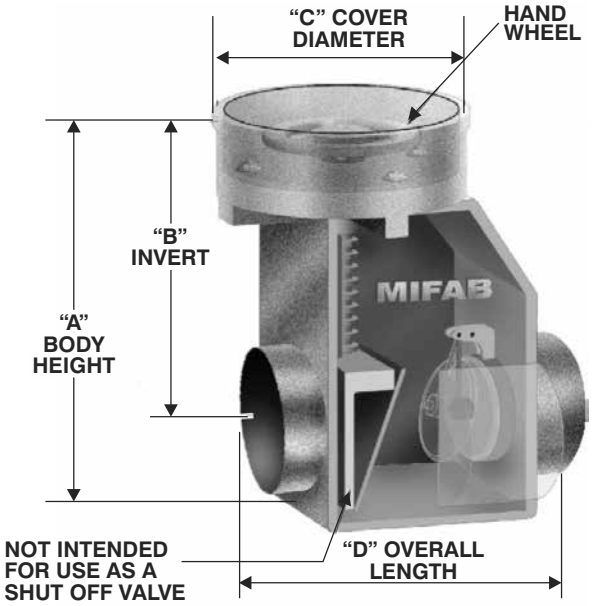

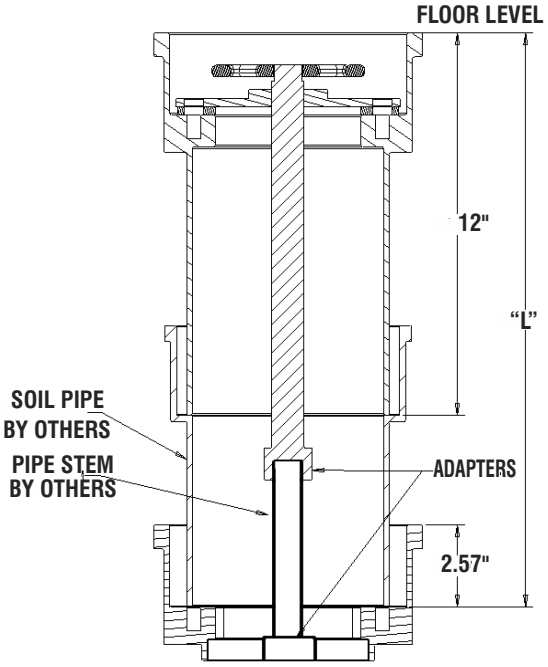

WHEEL HANDLE EXTENSION SYSTEM

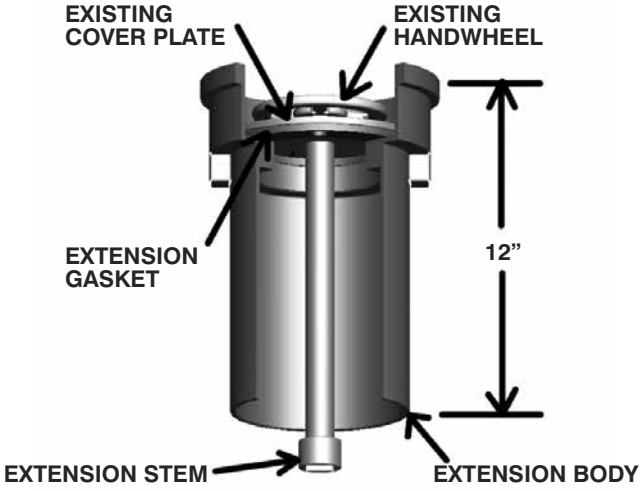

WHEEL HANDLE EXTENSION SYSTEM

BV1300 DIMENSIONS

PIPE SIZE	"A" BODY HEIGHT	"B" INVERT	"C" COVER DIAMETER	"D" LENGTH
4" (102)	15 3/4" (400)	12" (205)	8" (203)	14" (356)
6" (152)	19" (483)	14 1/2" (368)	10 1/2" (368)	16" (406)

MODEL NUMBER	"A" PIPE SIZE	WEIGHT (Lbs)	LIST PRICE
BV1304	4" No hub	80.00	**$ 6099.00**
BV1306	6" No hub	120.00	**$ 9361.00**

BV1300 OPTIONAL VARIATIONS:

SUFFIX	DESCRIPTION	LIST PRICE
-13	All galvanized	**$ 1841.00**
-HS	Hub spigot connection on inlet only	**No Add**
BV1304-EXT	12" extension (extension only for BV1304)	**$ 2839.00**
BV1306-EXT	12" extension (extension only for BV1306)	**$ 3261.00**

MI-800 FEMALE THREADED ECCENTRIC REDUCER BUSHING MI-800

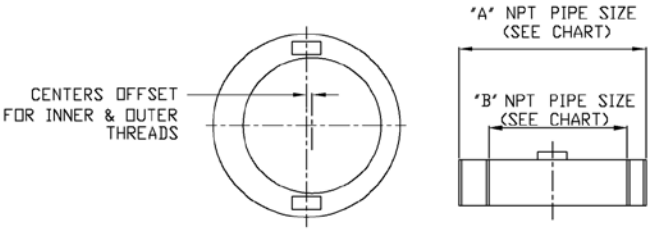

MODEL NUMBER	"A" SIZE "B" (M.P.T. x F.P.T.)	WEIGHT (Lbs)	LIST PRICE
MI-800-2	3" x 2"	1.00	$ 274.00
MI-800-3	4" x 2"	3.00	$ 158.00
MI-800-4	4" x 3"	1.75	$ 158.00
MI-800-6	6" x 5"	5.00	$ 204.00
MI-800-6-4	6" x 4"	4.75	$ 204.00

MI-830 CAST IRON MALE THREADED TO HUB ADAPTER MI-830

MODEL NUMBER	SIZE THREADED x HUB	WEIGHT (Lbs)	LIST PRICE
MI-830-3	3"	5.00	$ 258.00
MI-830-4	4"	6.00	$ 350.00
MI-830-5	5"	7.50	$ 566.00
MI-830-6	6"	9.00	$ 657.00

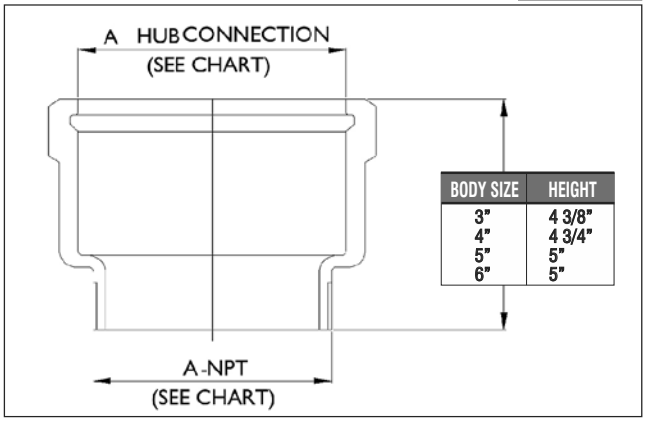

BODY SIZE	HEIGHT
3"	4 3/8"
4"	4 3/4"
5"	5"
6"	5"

MI-830 OPTIONAL VARIATIONS:

SUFFIX	DESCRIPTION	LIST PRICE
-6	Set of 3 security screws mounted at top.	$ 76.00
-13	Galvanized Cast Iron - 3", 4"	$ 119.00
-13	Galvanized Cast Iron - 5", 6"	$ 183.00

MI-850 CAST IRON NO HUB TO MALE THREADED ADAPTOR MI-850

MODEL NUMBER	SIZE M.I.P. x N0 HUB	WEIGHT (Lbs)	LIST PRICE
MI-850-2	2"	1.00	$ 143.00
MI-850-3	3"	2.00	$ 204.00
MI-850-4	4"	3.00	$ 317.00
MI-850-6	6"	5.00	$ 963.00
MI-850-8	8"	8.00	$ 1,069.00
MI-850-10	10"	11.00	$ 1,274.00
MI-850-12	12"	16.00	$ 1,596.00

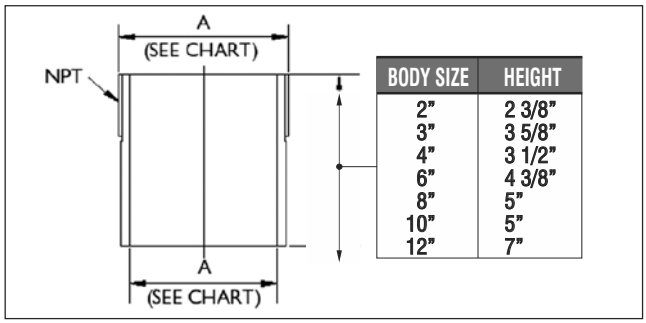

BODY SIZE	HEIGHT
2"	2 3/8"
3"	3 5/8"
4"	3 1/2"
6"	4 3/8"
8"	5"
10"	5"
12"	7"

MI-850 OPTIONAL VARIATIONS:

SUFFIX	DESCRIPTION	LIST PRICE
-13	Galvanized Cast Iron	$ 128.00

MI-860 CAST IRON ELBOW ADAPTER MI-860

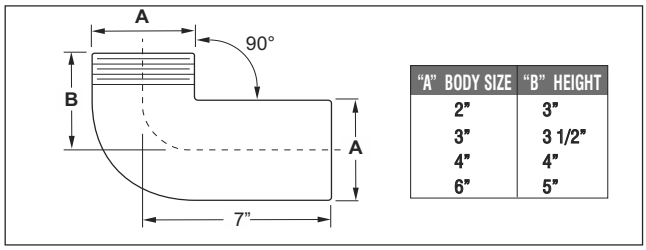

"A" BODY SIZE	"B" HEIGHT
2"	3"
3"	3 1/2"
4"	4"
6"	5"

MODEL NUMBER	PIPE SIZE (A)	WEIGHT (lbs.)	LIST PRICE
MI-862	2"	5	$ 466.00
MI-863	3"	8	$ 767.00
MI-864	4"	14	$ 871.00
MI-866	6"	25	$ 1,954.00

MI-860 OPTIONAL VARIATIONS:

SUFFIX	DESCRIPTION	LIST PRICE
-13	Galvanized Cast Iron - 2", 3"	$ 158.00
-13	Galvanized Cast Iron - 4"	$ 322.00
-13	Galvanized Cast Iron - 6"	$ 496.00

Design and dimensions are subject to modification. Prices do not include applicable taxes. Visit **www.mifab.com** for the most recent product information.
MIFAB®, Inc., 1321 West 119th Street, Chicago, Illinois 60643-5109, USA Toll Free: 1-800-465-2736 • Fax: 1-773-341-3049
All sales subject to MIFAB's® Terms & Warranties. Please refer to inside front cover. sales@mifab.com • Canada Toll Free: 1-800-387-3880

MI-940 COMPACT DEEP SEAL TRAP WITH FUNNEL

MI-940

MI-940 DIMENSIONS

"A" PIPE SIZE	"B" CENTER TO OUTLET	"C" CENTER OF INLET TO BOTTOM	"D" TRAP DEPTH
1 1/2"	5 3/4"	5"	4"
2"	5 3/4"	5 1/4"	4 1/4"
3"	7 3/4"	6 3/4"	6 1/4"

MI-940 OPTIONAL VARIATIONS:

SUFFIX	DESCRIPTION	LIST PRICE
-13	All galvanized 1 ½" (-11 for A.R.E. coating, 1 1/2")	$ 345.00
-13	All galvanized 2" (-11 for A.R.E. coating, 2")	$ 392.00
-13	All galvanized 3" (-11 for A.R.E. coating, 3")	$ 441.00
-49	Chrome Plated	$ 1,365.00
-NH	No hub outlet conection (See MI-850)	See MI-850

MODEL NUMBER	SIZE	WEIGHT (Lbs)	LIST PRICE
MI-941	1 1/2"	4.00	$ 605.00
MI-942	2"	5.00	$ 1,002.00
MI-943	3"	6.00	$ 1,170.00

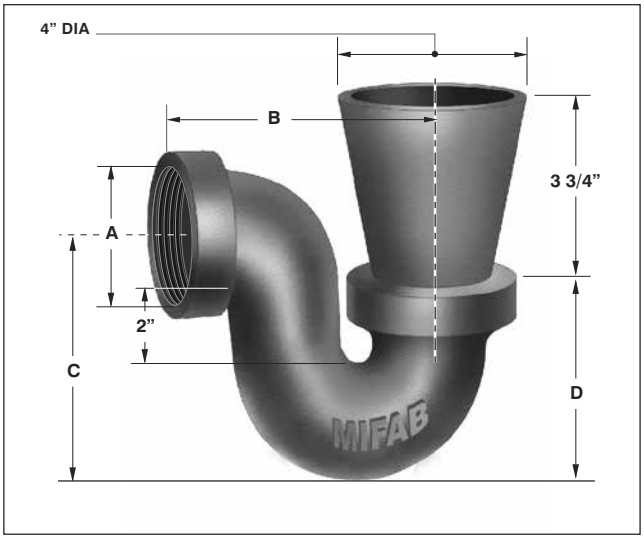

MI-950 DEEP SEAL TRAP

MI-950

MI-950 DIMENSIONS

"A" PIPE SIZE	"B" BODY HEIGHT	"C" TRAP DEPTH	"D" CENTER TO OUTLET	"E" INVERT
2"	10 1/2"	4"	6 1/2"	2 3/4"
3"	13 1/2"	4"	8"	3 1/2"
4"	15 1/4"	5"	10"	4 1/4"

MI-950 OPTIONAL VARIATIONS:

SUFFIX	DESCRIPTION	LIST PRICE
-G	Flushing Connection	$ 217.00
-7	Trap Primer Connection (½")	$ 217.00
-13	All galvanized 2" (-11 for A.R.E. coating, 2")	$ 183.00
-13	All galvanized 3" (-11 for A.R.E. coating, 3")	$ 426.00
-13	All galvanized 4" (-11 for A.R.E. coating, 4")	$ 672.00

MODEL NUMBER	SIZE	WEIGHT (Lbs)	LIST PRICE
MI-952	2" No hub	8.00	$ 65.00
MI-953	3" No hub	17.00	$ 969.00
MI-954	4" No hub	25.00	$ 1,448.00

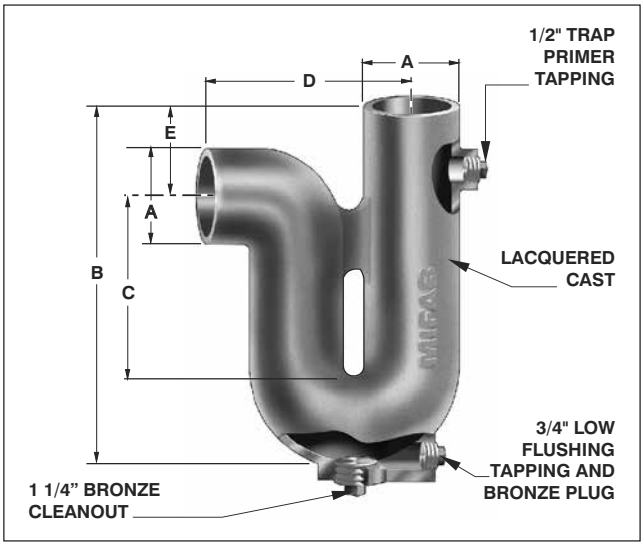

MI-950-F DEEP SEAL TRAP WITH FUNNEL

MI-950-F

MI-950-F DIMENSIONS

"A" PIPE SIZE	"B" BODY HEIGHT	"C" TRAP DEPTH	"D" CENTER TO OUTLET	"E" INVERT
2"	10 1/2"	4"	6 1/2"	2 3/4"
3"	13 1/2"	4"	8"	3 1/2"
4"	15 1/4"	5"	10"	4 1/4"

MI-950-F OPTIONAL VARIATIONS:

SUFFIX	DESCRIPTION	LIST PRICE
-G	Flushing Connection	$ 217.00
-20	Secondary Flat Strainer (FD-9600 Series)	$ 95.00
-6-50	6" Dia. Funnel (-50)	$ 160.00
-6-1	6" Dia. Funnel (-1)	$ 238.00
-13	All galvanized 2" (-11 for A.R.E. coating, 2")	$ 445.00
-13	All galvanized 3" (-11 for A.R.E. coating, 3")	$ 523.00
-13	All galvanized 4" (-11 for A.R.E. coating, 4")	$ 626.00

MODEL NUMBER	SIZE	WEIGHT (Lbs)	LIST PRICE (-50) CAST IRON	LIST PRICE (-1) NICKEL BRONZE
MI-952-F	2" No hub	9.00	$ 1,050.00	$ 1,974.00
MI-953-F	3" No hub	18.00	$ 1,224.00	$ 2,143.00
MI-954-F	4" No hub	26.00	$ 1,389.00	$ 4,210.00

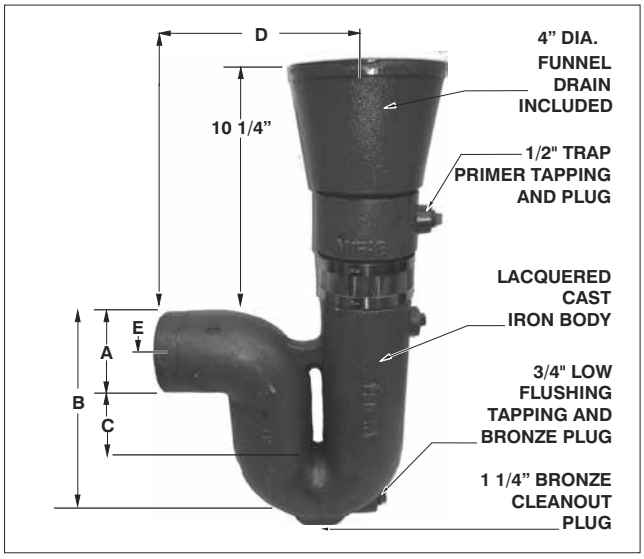

MI-CAG CAST IRON FIXED AIR GAP

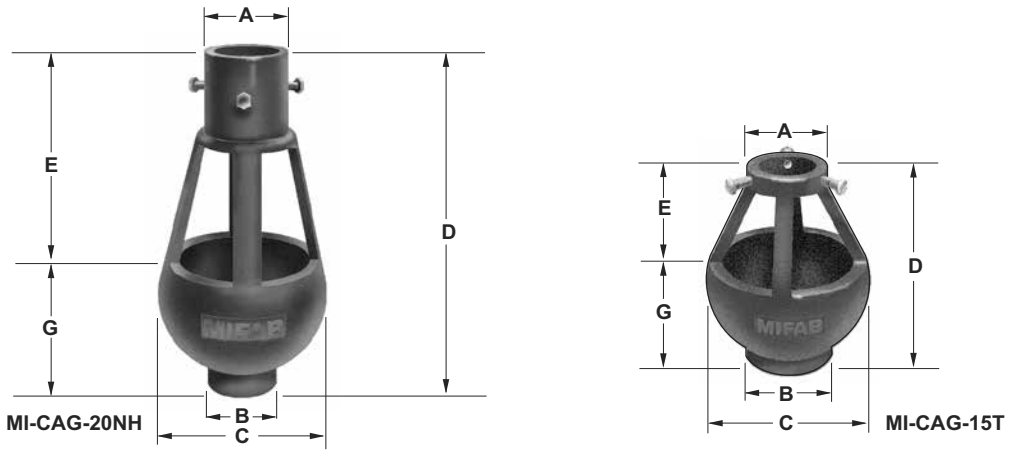

MODEL NUMBER	SIZE (SLIP JOINT x F.I.P.)	SIZE (SLIP JOINT x NO HUB)	"A"	"B"	"C"	"D"	"E"	"G"	WEIGHT (Lbs.)	LIST PRICE
MI-CAG-10T	1/2" x 1"	-	1/2"	1"	3 1/4"	4 3/4"	2"	2 3/4"	3.00	$ 455.00
MI-CAG-15T	3/4" x 1 1/2"	-	3/4"	1 1/2"	4 1/4"	6 1/3"	2 3/4"	3 1/4"	3.00	$ 630.00
MI-CAG-20T	1" x 2"	-	1"	2"	4 1/2"	8"	4"	4"	4.00	$ 630.00
MI-CAG-20NH	-	1 1/2" x 2"	1 1/2"	2"	5 ½"	11 1/2 "	4"	7 1/2"	4.00	$ 437.00
MI-CAG-30NH	-	2" x 3"	2"	3"	5 1/2"	13"	5 3/4"	7 1/2"	8.00	$ 526.00
Add for:	All galvanized (-13) Acid resistant epoxy coated body									$ 297.00

MI-GAP-NPB BRASS TRAP SEAL PRIMER AIR GAP FITTING

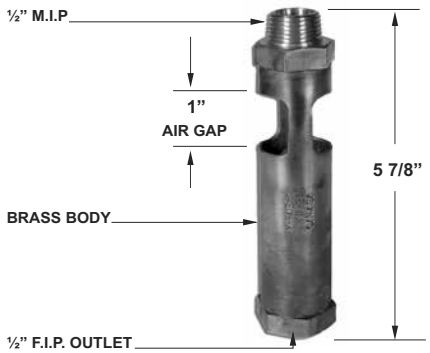

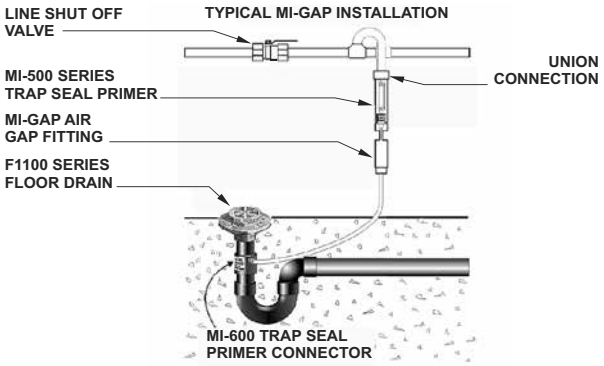

MIFAB's MI-GAP-NPB air gap fitting can be used with MIFAB's MR-500-NPB, M1-500-NPB, M2-500-NPB, MI-TSP-1-NPB, MI-TSP-2-NPB, MI-TSP-3-NPB trap seal primers and MIFAB's MI-DU Series distribution units. The MI-GAP-NPB performs the dual functions of backflow preventer and vacuum breaker.

Note: A vertical air gap of twice the connection size is required by code.

MODEL NO.	DESCRIPTION	LIST PRICE	SHIP WEIGHT (Lbs)	CARTON QTY.	CARTON WEIGHT (Lbs)
MI-GAP-NPB	Brass Air Gap Fitting for Trap Seal Primer Valves	See current TSP Price Book	1.5	10	15.0

MI-GRILL FRESH AIR INLET

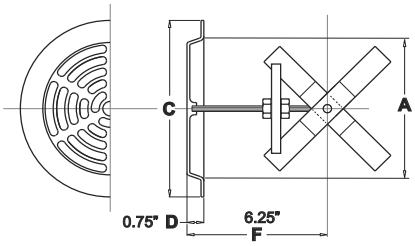

MODEL NUMBER	"A" PIPE SIZE	"C" COVER DIAMETER	WEIGHT (lbs)	LIST PRICE NICKEL BRONZE	LIST PRICE CHROME PLATED (-49)
MI-GRILL-4	3", 4"	8"	3.00	$ 796.00	$ 1222.00
MI-GRILL-6	5", 6"	12"	4.00	$ 1345.00	$ 1771.00
MI-GRILL-8	8"	15"	5.00	$ 2144.00	$ 2570.00
MI-GRILL-10	10"	15"	9.00	$ 2144.00	$ 2570.00

Design and dimensions are subject to modification. Prices do not include applicable taxes. Visit **www.mifab.com** for the most recent product information.
MIFAB®, Inc., 1321 West 119th Street, Chicago, Illinois 60643-5109, USA Toll Free: 1-800-465-2736 • Fax: 1-773-341-3049
All sales subject to MIFAB's® Terms & Warranties. Please refer to inside front cover. sales@mifab.com • Canada Toll Free: 1-800-387-3880

TRAP SEAL PRIMERS

SEDIMENT FILTER
A replacement stainless steel sediment filter prevents line debris from entering the primer. This can be replaced after wear and build up of debris to ensure maximum life and performance of the primer.

3 P.S.I. PRESSURE DROP
Only a three p.s.i. line pressure drop is required to activate the primer compared to five or ten p.s.i. by others. Lower water volume fixtures and faucets has resulted in lower line pressure drops. A three p.s.i. performance point ensures reliable water delivery to maintain the trap seal.

NO ADJUSTMENTS
The replaceable and repairable cartridge tubes inside of the body are factory engineered to deliver enough water to service three, six or ten floor drain traps without adjustment. This eliminates confusion during field installation.

NO PRECHARGE
MIFAB's trap seal primers can be disassembled in the field for easy cleaning and repair, without risk of losing a precharge.

VIEW HOLES
Four view holes permit easy inspection of water delivery. The holes are across from each other, enabling light at the opposite end to illuminate the performance of the primer.

(MR-500-NPB ILLUSTRATED)

MIFAB TRAP SEAL PRIMER SELECTION GUIDE

Trap seal primers are a necessity where floor drains are infrequently used and in areas such as mechanical and service rooms. In surprisingly little time, evaporation of water in floor drain traps will allow sewer gas to enter the interior of the building. Today's typical method of cleaning floors produces very little water that runs into floor drains. In mechanical rooms, warm dry conditions and air pressure changes caused by HVAC equipment may also serve to compromise the water seal. Trap seal primers provide a supply of water to replenish the deep seal or "P" trap of a drain to prevent sewer or potentially explosive methane gas from entering the area through the floor drains. They are installed on the potable cold water supply line, and react to water flowing in the line to trigger, either by turbulence or pressure drop. Once a triggering event occurs, the primer will release water that is piped to a trap primer connector on or near the "P" trap being maintained. The selection and specifcation of trap seal primers merits careful consideration. Outlined below are some of the factors to be aware of when planning to use trap seal primers effectively. Installation and local code requirements must be taken into account when specifying trap seal primers. The A.S.S.E. (American Society of Sanitary Engineers) trap seal primer standard #1018 is the key standard that relates to trap seal primers. MIFAB's M-500-NPB and MI-TSP-NPB trap seal primers are tested and certifed to the A.S.S.E. 1018 Standard.

MI-TSP-1-NPB ILLUSTRATED
(Continuous flow)

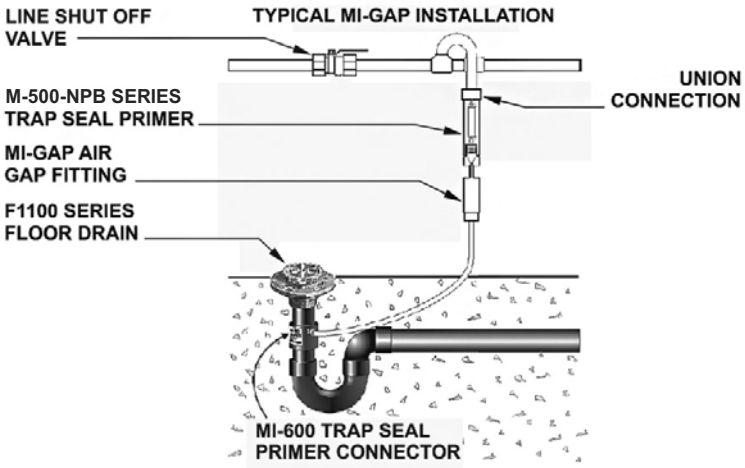

ELECTRONIC TRAP SEAL PRIMERS

MIFAB's MI-100 Series of electronic trap seal primers are a pre-assembled electronic trap seal primer system programmed to maintain the water seal of floor drain traps. The device is made with an A.S.S.E. approved vacuum breaker, solenoid valve operated by a timer, shut off valve for maintenance and a manifold system to distribute water evenly to the desired floor drain traps. The design is programmed at MIFAB's factory with standard flush times. These flush times can be adjusted by the operator in order to discharge more or less water to the floor drain traps, depending on the installation and climate conditions. Applications include commercial buildings such as schools, hospitals, manufacturing facilities, and any other buildings that require floor drain trap seal protection. The distribution of water from the MI-100 to the traps avoids possible odors coming from the drains.

TYPES OF TRAP SEAL PRIMERS

There are four main types of trap seal primers. They include: continuous flow, pressure drop activated, fush valve operated and electronic.

CONTINUOUS FLOW TRAP SEAL PRIMERS

Continuous flow trap seal primers are the original style of trap seal primers. They are typically constructed of cast brass or bronze with a neoprene rubber poppet float on the inside that rises upward as water flows through the primer. When the poppet rises off of its seat, water flows from the primer, through the plumbing line connection, and into the floor drain trap. They are manufactured in either sweat, threaded or union connections and should be installed in a vertical position within the horizontal water supply line, at least ten inches above the loor drain trap that it serves. Continuous flow trap seal primers do not have any method of screening out line debris. This often results in their clogging and either flowing water continuously, or not at all. The volume of water that they discharge is directly related to the amount of water that continuously flows through them. For these reasons, pressure drop activated trap seal primers have become the selection of choice for specifers.

Design and dimensions are subject to modification. Prices do not include applicable taxes. Visit **www.mifab.com** for the most recent product information.
MIFAB®, Inc., 1321 West 119th Street, Chicago, Illinois 60643-5109, USA
Toll Free: 1-800-465-2736 • Fax: 1-773-341-3049
sales@mifab.com • Canada Toll Free: 1-800-387-3880
All sales subject to MIFAB's® Terms & Warranties. Please refer to inside front cover.

MIFAB® TRAP SEAL PRIMER SELECTION GUIDE (Cont'd)

PRESSURE DROP ACTIVATED TRAP SEAL PRIMERS

Pressure drop activated trap seal primers are typically manufactured out of brass. They are made with a 1/2" M.I.P. inlet connection and a 1/2" F.I.P. outlet connection. They have an interior cartridge that seals when the line pressure is in a static state. When the line pressure drops as little as three p.s.i. (pounds per square inch) (caused by the flushing of a toilet, opening of a faucet, or any draw of water from the water supply line within a close distance to the primer) the interior cartridge will rise due to the pressure differential within the primer and a metered amount of water is discharged under pressure into the plumbing line connected to the floor drain trap. Pressure drop activated trap seal primers are supplied with a fine mesh stainless steel filter that will screen out debris to ensure that the cartridge is not clogged and that the water deliveries are uniform. The filter is easily accessible for quick cleaning or replacement. Three different cartridges offer three different water deliveries into the floor drain, depending on the number of floor drain traps served and the evaporation rate of the water in the floor drain traps. Assuming line pressure of 60 p.s.i, and a line pressure drop of 3 p.s.i., MIFAB's MR-500-NPB trap seal primer will discharge a one half ounce of water, the M1-500-NPB and M3-500-NPB will discharge a full ounce of water and the M2-500-NPB will discharge a one quarter ounce of water into the floor drain trap every time the line pressure changes by 3 p.s.i.

> *"I stock the MR-500-NPB because it's a great product and I don't get any call backs. It's a great seller."*
>
> – Dave Brown, Owner, Ken Brown and Sons, New Orleans, LA

MR-500-NPB ILLUSTRATED
(Pressure drop activated)

FLUSH VALVE TRAP SEAL PRIMERS

Flush valve trap seal primers are installed below the flush valve and direct an amount of waste water discharged from the flush valve into a tube that connects to the floor drain trap to maintain the water seal. Their advantages are that the water used is already consumed by the flush valve operation, and this type of primer has no moving parts. Their disadvantage is that their location is determined by the location of the fixtures which may be too far away from the floor drains to be practical; unlike supply line mounted trap seal primers which can be more easily installed close to the floor drain trap to be primed. Many installations cannot use flush valve trap seal primers because the floor drain traps are too far away to be reached by the flush valve trap seal primer.

The following link is a CEU accredited presentation on why trap seal primers are required by the Plumbing Code and the different types of trap seal primers.

https://bit.ly/TSP-CEU

MI-701 ILLUSTRATED
(Flush valve operated)

MIFAB® TRAP SEAL PRIMER SELECTION GUIDE (Cont'd)

INSTALLATION CONSIDERATIONS

Continuous flow and pressure drop activated trap seal primers should be installed at least 12" above the floor drain traps for every 20 feet of distance to the drain to ensure that there is enough of a slope for the discharged water to flow to the traps. MIFAB recommends pre-priming the traps, as trap seal primers are meant to replace trap water loss through evaporation, etc. Pressure drop activated primers should be connected to the water supply line with a vertical elbow to limit line debris from entering and contaminating the valve. The primer itself should be installed vertically. Access doors should always be specifed to provide easy access to all trap seal primers. Trap seal primers have moving parts that will eventually wear or be compromised by line debris even in the best of circumstances. The access doors specifed should be large enough to provide "hand access" to the trap seal primer, related accessories and line shut off valve. For quick and easy repair, a line shut off valve and union connections are recommended directly before the trap seal primer on the water supply line. The closing of this valve will facilitate the cleaning and maintenance of the primer without having to separately shut off the building's water supply. Water supply lines should be flushed at least five times before the trap seal primers are initially installed to ensure that debris will not enter the primers and negatively affect their performance. Pipe dope and paste should never be used when installing trap seal primers in water supply lines because the fne residue from these adhesives will enter the trap seal primers and clog the cartridges. Install the trap seal primer as close to the source of the pressure drop as possible. Fixtures with a water restriction device may not cause a large enough pressure drop to activate the trap seal primer.

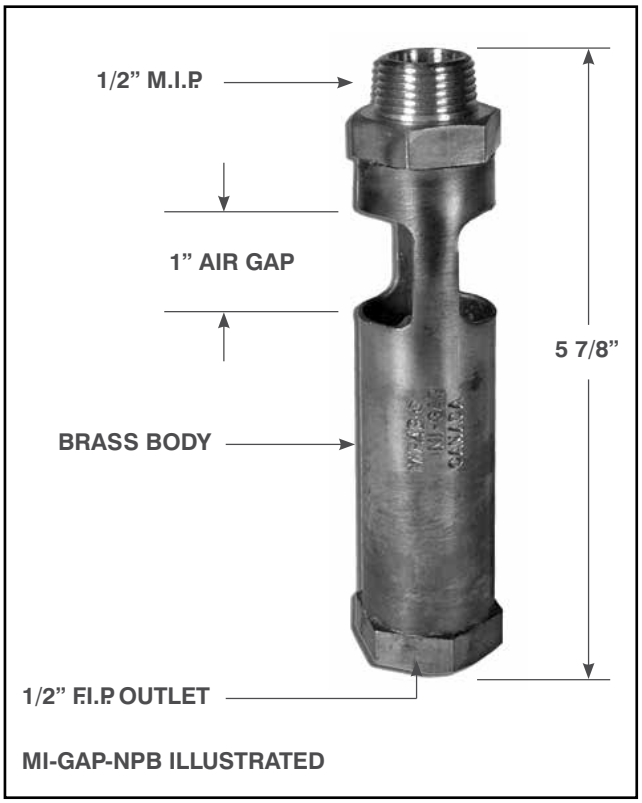

MI-GAP-NPB ILLUSTRATED

AIR GAP FITTING

Many local codes require the use of an air gap fitting underneath the trap seal primer (see MIFAB's MI-GAP-NPB product). The purpose of an air gap ftting is to provide a vertical space that is twice the diameter of the water supply connection in order to ensure positive protection against back flow. ANSI / ASME Standard A112.1.2 air gap in plumbing systems is written for the application of air gap fttings. It is recommended that air gaps be specifed for use in areas where splashing water from the air gap will not be objectionable or cause damage.

DISTRIBUTION UNITS

Distribution units can be installed underneath pressure drop activated trap seal primers to distribute water to up to ten floor drain traps that are in close proximity to each other. (See MIFAB's MI-DU product) Typically, distribution units are used when a men and women's restroom are located side by side with a common pipe chase between them. In this instance, one trap seal primer with a distribution unit dialed to the 2 setting can be used to service both floor drain traps. This eliminates a second costly installation procedure, shut off valve, access door and air gap ftting. MIFAB's distribution units are engineered so that they do not need to be installed level to distribute water evenly and can be adjusted to serve either two, three or four floor drain traps with a single unit. Up to ten floor drain traps can be served by having one main distribution unit feed others below it. Contact MIFAB for layout information on distribution units serving multiple drains.

LINE SHUT OFF VALVE

The closing of this valve will facilitate the cleaning and maintenance of the primer without having to separately shut off the building's water supply. Water supply lines should be flushed several times before the trap seal primers are initially installed to ensure that debris will not enter the primers and negatively affect their performance. Pipe dope and paste should never be used when installing trap seal primers in water supply lines because the fine residue from these adhesives will enter the trap seal primers and clog the cartridges. Once installed, pressure drop activated trap seal primers should be cycled at least five times to ensure reliable operation. Quickly opening and closing the line shut off valve can accomplish this. Four view holes located directly across from each other at the bottom of the pressure drop activated trap seal primers allow easy observation of water discharging into the make up line that leads to the floor drain trap.

Design and dimensions are subject to modification. Prices do not include applicable taxes. Visit **www.mifab.com** for the most recent product information.
MIFAB®, Inc., 1321 West 119th Street, Chicago, Illinois 60643-5109, USA Toll Free: 1-800-465-2736 • Fax: 1-773-341-3049
All sales subject to MIFAB's® Terms & Warranties. Please refer to inside front cover. sales@mifab.com • Canada Toll Free: 1-800-387-3880

M-500-NPB PRESSURE DROP ACTIVATED TRAP SEAL PRIMER

3 P.S.I PRESSURE DROP
Only a three p.s.i. line pressure drop is required to activate the primer, compared to five or ten p.s.i. by others. Lower water voume fixtures and faucets has resulted in lower line pressure drops. A three p.s.i. performance point ensures reliable water delivery to maintain the trap seal.

NO PRECHARGE
MIFAB's trap seal primers can be disassembled in the field for easy cleaning and repair, without risk of losing a precharge.

VIEW HOLES
Four view holes permit easy inspection of water delivery. The holes are across from each other, enabling light at the opposite end to illuminate the performance of the primer.

SEDIMENT FILTER
A replacement stainless steel sediment filter prevents line debris from entering the primer. This can be replaced after wear and build up of debris to ensure maximum life and performance of the primer.

NO ADJUSTMENTS (except for M3-500-NPB)

The replaceable and repairable cartridge tubes inside of the body are factory engineered to deliver enough water to service three, six or ten floor drain traps without adjustment. This eliminates confusion during field installation.

The M-500 Series of trap seal primers are tested and third party listed to the A.S.S.E. 1018 Standard.

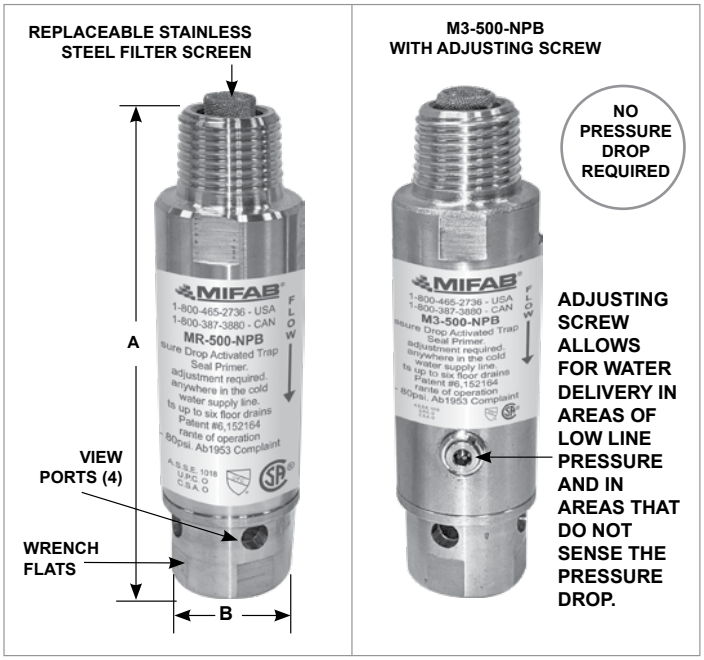

LEAD FREE UPC

All four models are listed with I.A.P.M.O. and C.S.A. (File #110892_0_000) and are tested and certified to the A.S.S.E. Standard 1018 and are so marked. U.S. Patent # 6,152,164

"The MR-500 is the most practical trap primer on the market. Never any failures and the quality is second to none. MIFAB® always sees to it that orders are shipped promptly and that you have no need to worry about failure."

– Tommy Honeycutt, Tolar Supply Inc., Fayetteville , NC

M-500 SERIES

MODEL NO.	LIST PRICE	A	B	PIPE FLATS	DRAINS SERVED	WATER OUTPUT
MR-500-NPB	See current TSP price book	4-1/8"	1-1/4"	1-1/8"	6	1/2 ounce
M1-500-NPB		4-1/8"	1-1/4"	1-1/8"	10	1 ounce
M2-500-NPB		4-1/8"	1-1/4"	1-1/8"	3	1/4 ounce
M3-500-NPB		4-1/8"	1-1/4"	1-1/8"	10	Adjustable
MR-500-SS (Stainless Steel)		4-1/8"	1-1/4"	1-1/8"	6	1/2 ounce

M-500 OPTIONAL VARIATIONS

MODEL NO.	DESCRIPTION	SHIP WEIGHT	CARTON QTY.	CARTON WEIGHT	REPLACEMENT FILTER SCREEN (-RF)	REPLACEMENT CARTRIDGE (-RC)
MR-500-NPB	Up to 6 drains	.75 lbs.	25	18.35 lbs.	See current TSP price book	See current TSP price book
M1-500-NPB	Up to 10 drains	.75 lbs.	25	18.35 lbs.		
M2-500-NPB	Up to 3 drains	.75 lbs.	25	18.35 lbs.		
M3-500-NPB	Up to 10 drains	.75 lbs.	25	18.35 lbs.		
M-500-UN	Union connection					
MR-500-SS	Type 316 Stainless Steel body, Up to 6 drains	.75 lbs.	25	18.35 lbs.		

M-500-UN FOR OPTIONAL UNION CONNECTION USE SUFFIX (-UN). READ DESCRIPTION BELOW.

The union connection (Model # M-500-UN) permits easy access to the top of the trap seal primer for cleaning and maintenance. Simply solder the pipe to the top of the union nut. Screw the union nut onto the top of the MR-500-NPB, M1-500-NPB, M2-500-NPB or M3-500-NPB trap seal primer during installation. When cleaning or maintenance of the trap seal primer is required. one can easily unscrew the union nut to access the trap seal primer and not have to cut the water supply pipe to access the trap seal primer.

MI-TSP-NPB — CONTINUOUS FLOW TRAP SEAL PRIMER

MI-TSP-NPB

MI-TSP-1-NPB
1/2" SWEAT CONNECTION

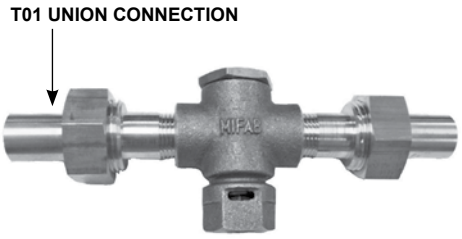

MI-TSP-3-NPB
THREADED WITH UNION CONNECTIONS

MI-TSP-2-NPB
(NPT) THREADED

MI-TSP-NPB							
MODEL NO.	DESCRIPTION	LIST PRICE	ADD FOR: CHROME PLATED (-CP)	SHIP WEIGHT (Lbs.)	CARTON QTY.	WEIGHT (Lbs.)	REPAIR KIT (-RK)
MI-TSP-1-NPB	1/2" Sweat	**$423.00**	**$143.00**	1.0	20	20	**$207.00**
MI-TSP-2-NPB	1/2" Threaded	**$423.00**	**$143.00**	1.0	20	20	**$207.00**
MI-TSP-3-NPB	1/2" Threaded with union connections	**$644.00**	**$143.00**	1.0	20	20	**$207.00**

Part number for **MI-TSP-1,2,3-NPB**, repair kit is **MI-TSP-RK**. (**SUFFIX - RK**)

The MI-TSP Series of trap seal primers are tested and third party listed to the A.S.S.E. 1018 Standard.

LEAD FREE UPC

MI-DU — TRAP SEAL PRIMER DISTRIBUTION UNIT

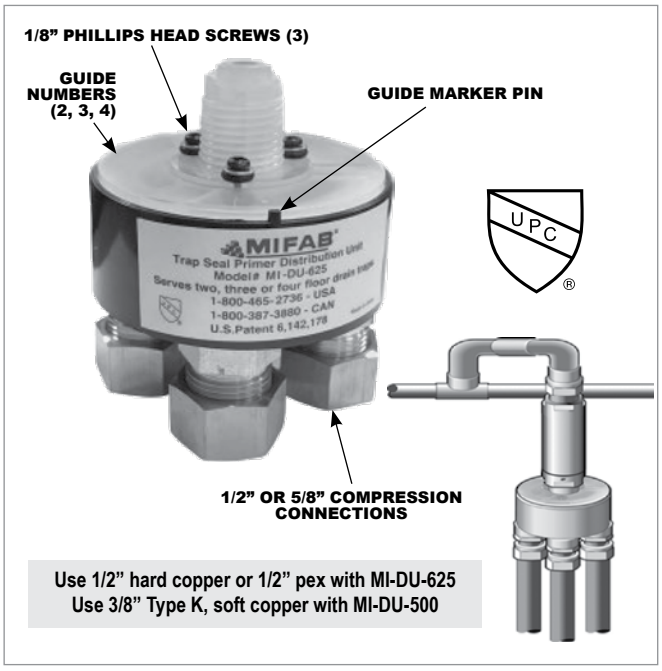

MIFAB's MI-DU trap seal primer distribution unit is engineered to receive a metered amount of water **from a trap seal primer** and distribute the water equally to either two, three or four floor drain traps. Choose from either 1/2" or 5/8" compression connections by indicating suffix (-500) for 1/2" or suffix (-625) for 5/8". The lid of the distribution unit has the numbers "2", "3" and "4" marked on it. The body of the distribution unit has a guide marker on the top of the body. The numbers and the guide marker are positioned by removing the three screws in the lid of the unit and rotating the lid to match the appropriate numbers with the guide marker to provide priming for the desired number of drains. The underside is marked with numbers 1-4 for ease in determining which ports will receive the water. Do not over torque the three lid screws when securing the lid back to the body. It is not necessary to install MIFAB's distribution perfectly level. The unique design will distribute water uniformly when out of level up to 5 degrees.

Models MI-DU-500 and MI-DU-625 are tested and certified to the I.A.P.M.O. I.G.C Standard 178-2002 (R2014) entitled "I.A.P.M.O. Guide Criteria for Gravity Fed Water Distribution Manifolds for Trap Primers". U.S. Patent # 6,142,178.

MI-DU						
MODEL NO.	DESCRIPTION	LIST PRICE -500 (1/2" compression)	LIST PRICE -625 (5/8" compression)	SHIPPING WEIGHT	CARTON QTY.	CARTON WT.
MI-DU	Trap Seal Primer Distribution unit that serves two, three or four floor drain traps.	**See current TSP price book (for 3/8" copper)**	**See current TSP price book (for 1/2" copper)**	.75 lbs.	6	4.5 lbs.

Design and dimensions are subject to modification. Prices do not include applicable taxes. Visit **www.mifab.com** for the most recent product information.
MIFAB®, Inc., 1321 West 119th Street, Chicago, Illinois 60643-5109, USA Toll Free: 1-800-465-2736 • Fax: 1-773-341-3049
All sales subject to MIFAB's® Terms & Warranties. Please refer to inside front cover. sales@mifab.com • Canada Toll Free: 1-800-387-3880

MR-ENC TRAP SEAL PRIMER IN A BOX WITH SHUT OFF VALVE

The MR-ENC Series are designed to enclose an MR Series pressure drop activated trap seal primer within a wall for convenient inspection and maintenance. Fabricated 16 gauge stainless steel enclosures are available. Specify Suffix -SS.

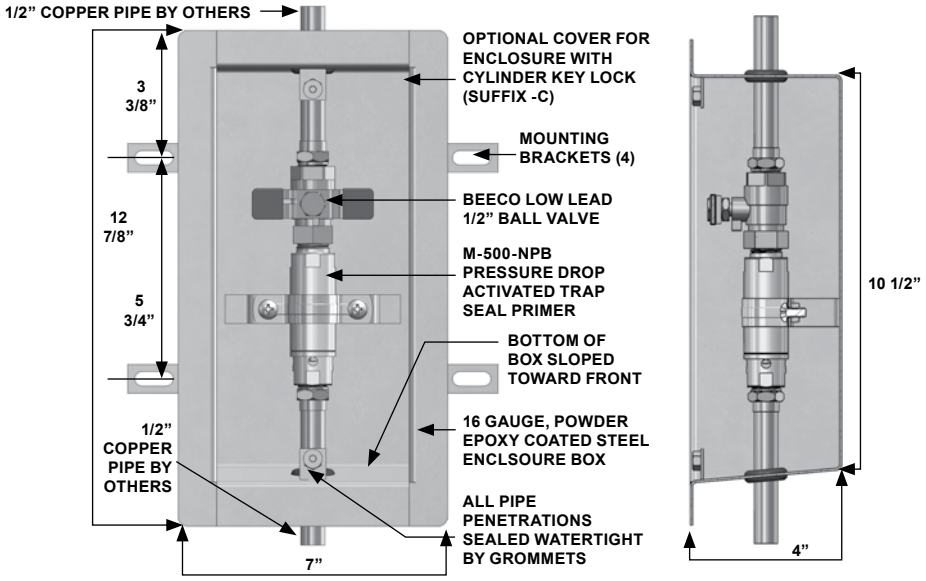

MR-ENC			
MODEL NO.	**DESCRIPTION**	**LIST PRICE**	**SHIPPING WT.**
MR-ENC	Trap Primer in Box	**See current TSP price book**	10 lbs.

MR-ENC-AG

TRAP SEAL PRIMER IN A BOX WITH SHUT OFF VALVE, AIR GAP AND DISTRIBUTION UNIT

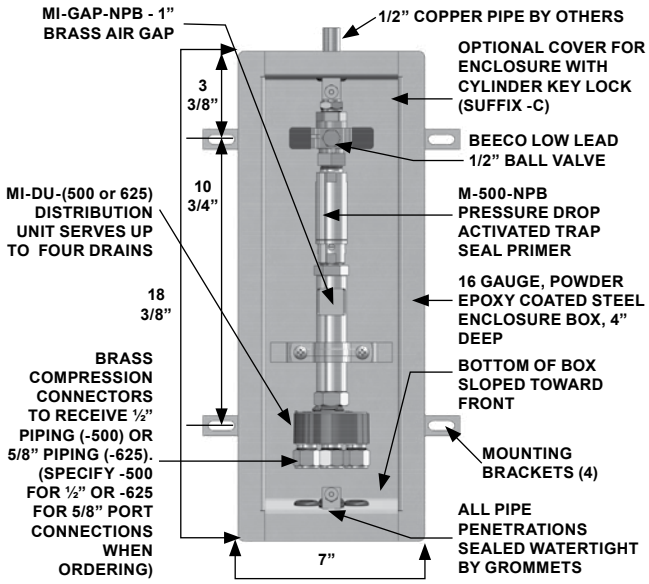

MR-ENC-AG			
MODEL NO.	**DESCRIPTION**	**LIST PRICE**	**SHIPPING WT.**
MR-ENC-AG-DU-500	Trap Primer in Box w/ AG and 1/2" connections on DU	**See current TSP price book**	12 lbs.
MR-ENC-AG-DU-625	Trap Primer in Box w/ AG and 5/8" connections on DU		12 lbs.

MR-ENC-DU

TRAP SEAL PRIMER IN A BOX WITH SHUT OFF VALVE, AND DISTRIBUTION UNIT

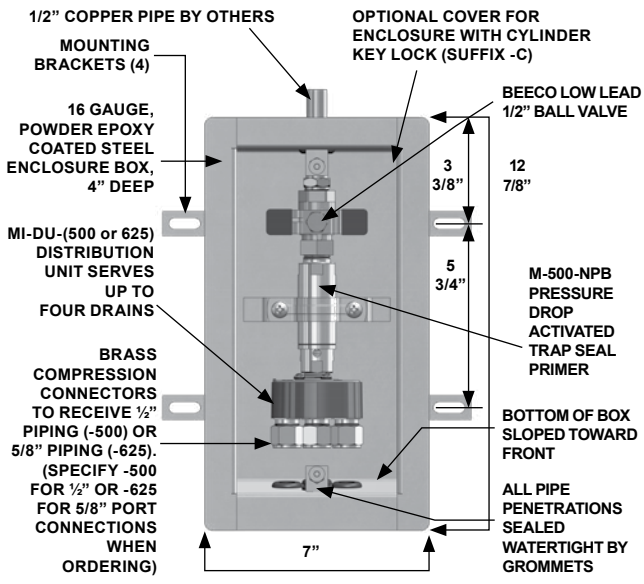

MR-ENC-DU			
MODEL NO.	**DESCRIPTION**	**LIST PRICE**	**SHIPPING WT.**
MR-ENC-DU-500	Trap Primer in Box w/ DU and 1/2" connections	**See current TSP price book**	12 lbs.
MR-ENC-DU-625	Trap Primer in Box w/ DU and 5/8" connections		12 lbs.

MI-100 ENCLOSED ELECTRONIC TRAP SEAL PRIMER

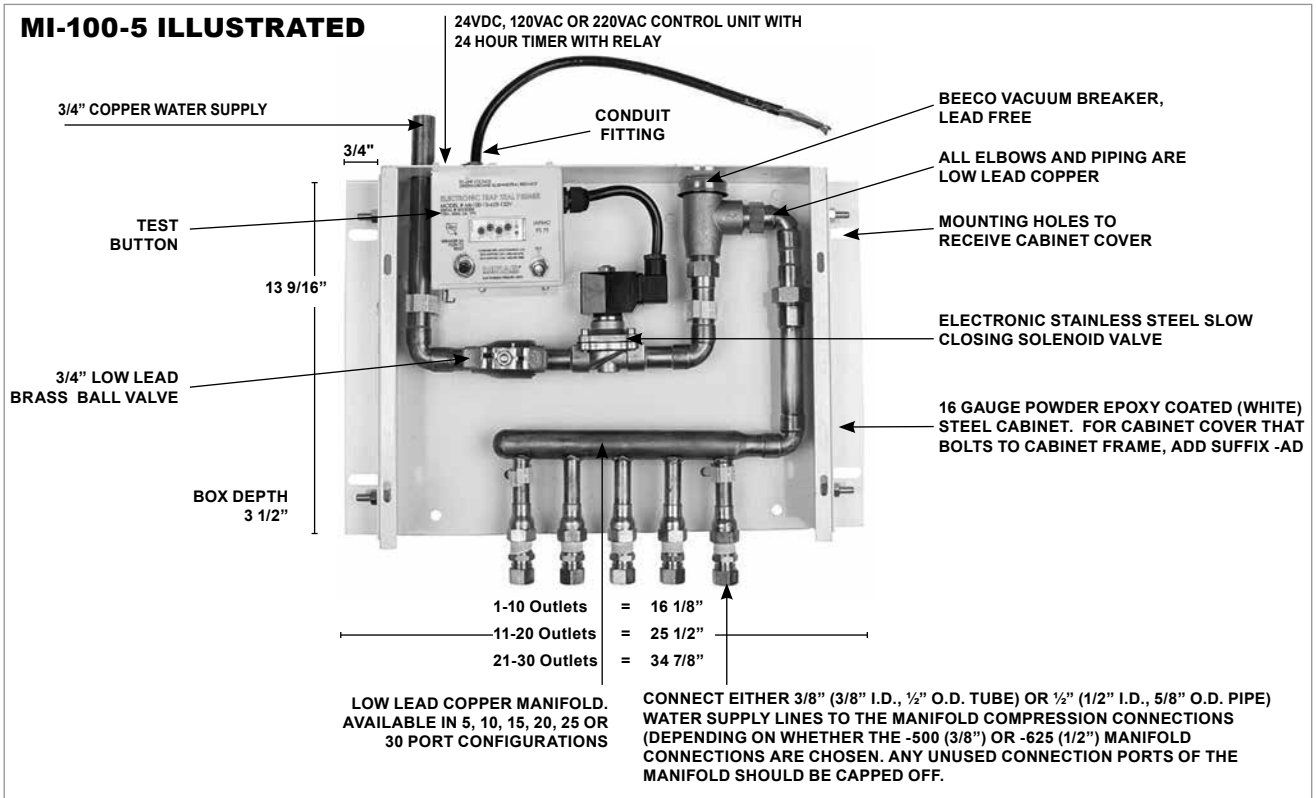

Note: All of MIFAB's electronic trap seal primers ordered with the 24VDC power option are equipped with a 120VAC plug adapter. The 120VAC plug adapter is designed to plug into a standard 120VAC three prong outlet. The plug adapter converts the voltage from 120VAC to 24VDC. The electronic trap seal primer internal components operate on the 24VDC supplied by the plug adapter. 24VAC direct connect electrical supply is also available, Specify Suffix -24VAC. No add.

The MI-100 is engineered for equal distribution of water to all ports. It's the perfect solution to keep sewer gas from entering the building from seldom used floor drains. The MI-100 can be located anywhere in the water supply and is engineered to permit the building owner to adjust the frequency and amount of water delivery through a timer and stainless steel solenoid valve. A manifold ensures that a minimum of 2 ounces of water are delivered to every port over a twenty-four hour period. The unit must be mounted 12" above the finished floor for every 20' of water supply line. The MI-100 can be installed with a cabinet cover. The system is capable of priming from 1 to 30 floor drain traps. The MI-100 is practical to serve many floor drain traps in infrequently used buildings such as convention centers and sports facilities. The MI-100 is made of lead free materials that touch water.

> *"The newly designed MI-100 with all brass and metal manifold construction has been a big improvement on the overall quality and performance of this electric trap primer.It has been a great improvement for the commercial environments we install and design in."*
>
> – Gary Risse, Project Engineer, Intech Mechanical, Roseville, CA

LEAD FREE
UPC ®

The MI-100 Series of electronic trap seal primers are tested and third party listed to the A.S.S.E. 1044 Standard.

M-100			
MODEL NO.	**DESCRIPTION**	**LIST PRICE**	**SHIPPING WT.**
MI-100-5	1-5 opening ports with cabinet	**See current TSP price book**	25 lbs.
MI-100-10	6-10 opening ports with cabinet		26 lbs.
MI-100-15	11-15 opening ports with cabinet		27 lbs.
MI-100-20	16-20 opening ports with cabinet		28 lbs.
MI-100-25	21-25 opening ports with cabinet		35 lbs.
MI-100-30	26-30 opening ports with cabinet		36 lbs.

Design and dimensions are subject to modification. Prices do not include applicable taxes. Visit **www.mifab.com** for the most recent product information.
MIFAB®, Inc., 1321 West 119th Street, Chicago, Illinois 60643-5109, USA
Toll Free: 1-800-465-2736 • Fax: 1-773-341-3049
sales@mifab.com • Canada Toll Free: 1-800-387-3880
All sales subject to MIFAB's® Terms & Warranties. Please refer to inside front cover.

ENCLOSED ELECTRONIC TRAP SEAL PRIMER SYSTEM WITH PRESSURE VACUUM BREAKER

MI-100-DR

MI-100-5-DR ILLUSTRATED

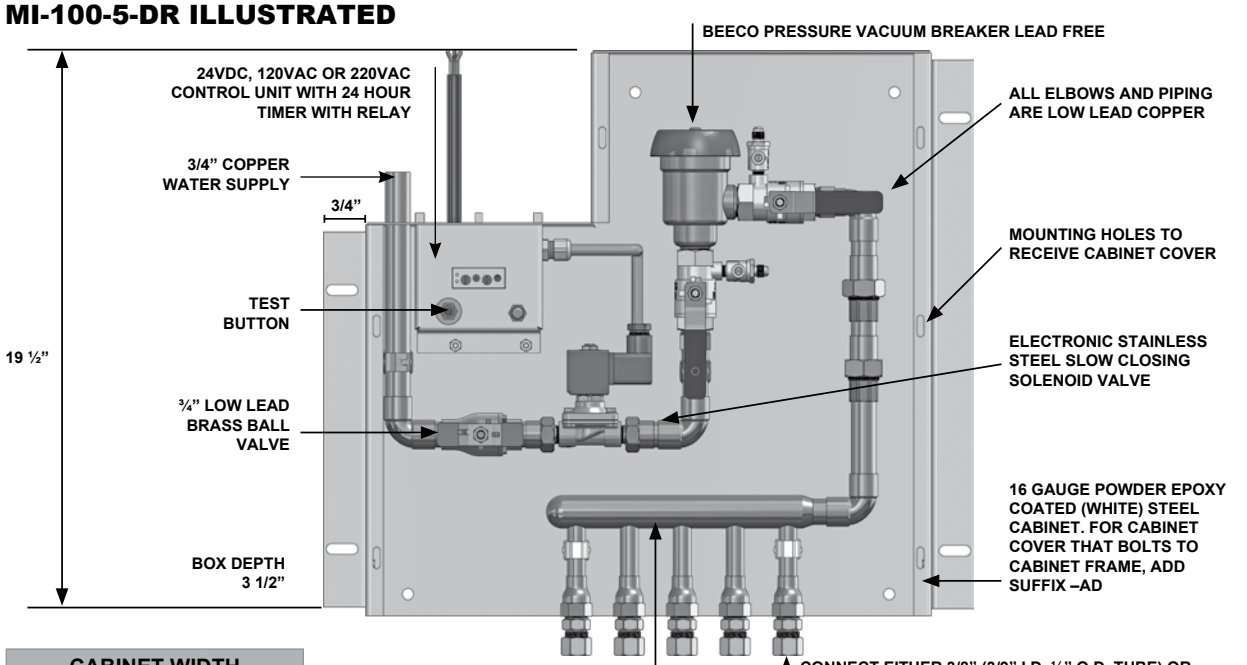

CABINET WIDTH	
1-10 OUTLETS	23"
11-20 OUTLETS	27 ½"
21-30 OUTLETS	36 5/8"

***Note: Plumbing system conditions vary and can sometimes cause water hammer with solenoid valves, consideration should be given to locating a water hammer arrestor close to the inlet of electronic trap primers. 24VAC direct connect electrical supply is also available, Specify Suffix -24VAC. No add.**

The MI-100-DR is used in areas that require frequent and automatic distribution of water into floor drain traps to maintain the water seal. This will prevent sewer gas from entering the area through the floor drains. A minimum of two ounces of water are supplied per opening at 20 PSIG once in every 24 hour period. Included within the design is a BEECO Pressure Vacuum breaker, accessible for repair and maintenance to meet the requirements of CSA Standard B64. The Canadian Plumbing Code states that floor drains are a "high hazard". Therefore, a testable "assembly" such as a Pressure Vacuum Breaker is required to comply with the CSA Standard B64. A typical backflow "device" such as an Atmospheric Vacuum Breaker does not meet the requirements of CSA Standard B64.

***Note:** Cabinet can be surface or flush mounted. The same cabinet can be installed either way.

MI-100-DR			
MODEL NO.	**DESCRIPTION**	**LIST PRICE**	**SHIPPING WT.**
MI-100-5-DR	1-5 opening ports with cabinet and PVB	**See current TSP price book**	30 lbs.
MI-100-10-DR	6-10 opening ports with cabinet and PVB		31 lbs.
MI-100-15-DR	11-15 opening ports with cabinet and PVB		32 lbs.
MI-100-20-DR	16-20 opening ports with cabinet and PVB		33 lbs.
MI-100-25-DR	21-25 opening ports with cabinet and PVB		40 lbs.
MI-100-30-DR	26-30 opening ports with cabinet and PVB		41 lbs.

MI-200 ELECTRONIC TRAP SEAL PRIMER WITH AIR GAP

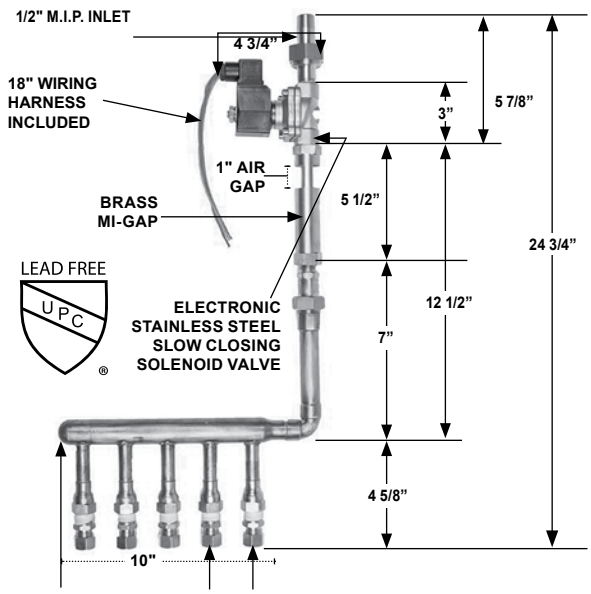

LOW LEAD COPPER MANIFOLD TO SERVE UP TO 5 DRAINS

CONNECT EITHER 3/8" (3/8" I.D., ½" O.D. TUBE) OR ½" (1/2" I.D., 5/8" O.D. PIPE) WATER SUPPLY LINES TO THE MANIFOLD COMPRESSION CONNECTIONS (DEPENDING ON WHETHER THE -500 (3/8") OR -625 (1/2") MANIFOLD CONNECTIONS ARE CHOSEN. ANY UNUSED CONNECTION PORTS OF THE MANIFOLD SHOULD BE CAPPED OFF.

The MI-200 is engineered to connect to the voltage building energy management system used to manage the services in commercial, educational and institutional buildings. It can be located anywhere in the water supply. A manifold is provided as part of the assembly so that up to 5 drains can be served. The MI-200 is practical for infrequently used buildings such as convention centers and sports facilities. The MI-200 is manufactured in accordance with ANSI/ASME A112.1.2 air gap in plumbing systems Standard. UA1818 access door is suggested for access to the MI-200 when installed into the wall. NOTE: Timer not included.

MI-200			
MODEL NO.	DESCRIPTION	LIST PRICE	SHIPPING WT.
MI-200-500-24VDC	connections for 1/2" piping, 24VDC	See current TSP price book	4 lbs.
MI-200-625-24VDC	connections for 5/8" piping, 24VDC		4 lbs.
MI-200-500-120VAC	connections for 1/2" piping, 120VAC		4 lbs.
MI-200-625-120VAC	connections for 5/8" piping, 120VAC		4 lbs.
MI-200-500-220VAC	connections for 1/2" piping, 220VAC		4 lbs.
MI-200-625-220VAC	connections for 1/2" piping, 220VAC		4 lbs.

The MI-200 Series of electronic trap seal primers are tested and third party listed to the A.S.S.E. 1044 Standard.

Specify Suffix - LM for MI-200 without the copper manifold for single drain line use. (1/2" F.I.P. connection) and **See current TSP price book.**

24VAC direct connect electrical supply is also available, Specify Suffix -24VAC. No Add.

MI-300 ELECTRONIC TRAP SEAL PRIMER WITH AIR GAP, COPPER MANIFOLD AND CONTROL PANEL

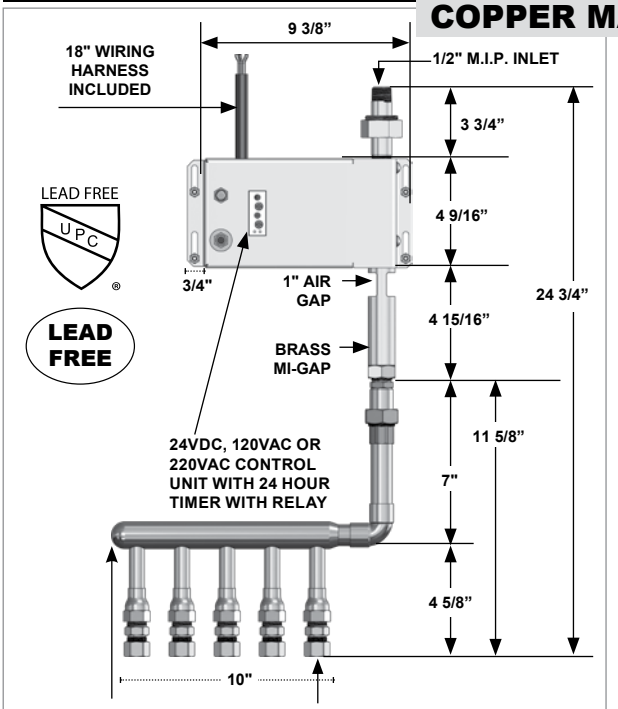

LOW LEAD COPPER MANIFOLD TO SERVE UP TO 5 DRAINS

CONNECT EITHER 3/8" (3/8" I.D., ½" O.D. TUBE) OR ½" (1/2" I.D., 5/8" O.D. PIPE) WATER SUPPLY LINES TO THE MANIFOLD COMPRESSION CONNECTIONS (DEPENDING ON WHETHER THE -500 (3/8") OR -625 (1/2") MANIFOLD CONNECTIONS ARE CHOSEN. ANY UNUSED CONNECTION PORTS OF THE MANIFOLD SHOULD BE CAPPED OFF.

The MI-300 is manufactured with a stainless steel solenoid valve, air gap, copper manifold and electronic controller. The water discharge frequency can be adjusted to meet the building's needs. The MI-300 can be located anywhere in the water supply. A manifold is connected to the bottom of the MI-300 to serve up to 5 drains. The MI-300 is practical for infrequently used buildings such as convention centers and sports facilities. The MI-300 is manufactured in accordance with ANSI/ASME A112.1.2 air gap in plumbing systems Standard. UA 18x18 access door is suggested for access to the MI-300 when installed in the wall.

MI-300			
MODEL NO.	DESCRIPTION	LIST PRICE	SHIPPING WT.
MI-300-500-24VDC	connections for 1/2" piping, 24VDC	See current TSP price book	8 lbs.
MI-300-625-24VDC	connections for 5/8" piping, 24VDC		8 lbs.
MI-300-500-120VAC	connections for 1/2" piping, 120VAC		8 lbs.
MI-300-625-120VAC	connections for 5/8" piping, 120VAC		8 lbs.
MI-300-500-220VAC	connections for 1/2" piping, 220VAC		8 lbs.
MI-300-625-220VAC	connections for 1/2" piping, 220VAC		8 lbs.

The MI-300 Series of electronic trap seal primers are tested and third party listed to the A.S.S.E. 1044 Standard.

Specify Suffix - LM for MI-300 without the copper manifold for single drain line use. (1/2" F.I.P. connection) and **See current TSP price book.**

24VAC direct connect electrical supply is also available, Specify Suffix -24VAC. No Add.

Design and dimensions are subject to modification. Prices do not include applicable taxes. Visit **www.mifab.com** for the most recent product information.
MIFAB®, Inc., 1321 West 119th Street, Chicago, Illinois 60643-5109, USA
Toll Free: 1-800-465-2736 • Fax: 1-773-341-3049
sales@mifab.com • Canada Toll Free: 1-800-387-3880
All sales subject to MIFAB's® Terms & Warranties. Please refer to inside front cover.

ELECTRONIC TRAP SEAL PRIMER WITH AIR GAP, COPPER MANIFOLD & CONTROL PANEL POWERED BY A BATTERY PACK

MI-300-BP

The MI-300-BP is manufactured with a stainless steel solenoid valve, air gap, copper manifold and battery pack controller that will last approximately one year. The water discharge frequency can be adjusted to meet the building's needs. The MI-300-BP can be located anywhere in the water supply. A manifold is connected to the bottom of the MI-300-BP to serve up to 5 drains. The MI-300-BP is practical for infrequently used buildings such as those that do not have access to power. The MI-300-BP is manufactured in accordance with ANSI/ASME A112.1.2 air gap in plumbing systems Standard. UA 18x18 access door is suggested for access to the MI-300-BP when installed in the wall.

MI-300-BP			
MODEL NO.	DESCRIPTION	LIST PRICE	SHIPPING WT.
MI-300-BP-500	connections for 1/2" piping	See current TSP price book	8 lbs.
MI-300-BP-625	connections for 5/8" piping		8 lbs.

Specify Suffix - LM for MI-300-BP without the copper manifold for single drain line use. (1/2" F.I.P. connection) and **See current TSP price book**

The MI-300 Series of electronic trap seal primers are tested and third party listed to the A.S.S.E. 1044 Standard.

LEAD FREE

LEAD FREE

Note: Estimated life of the supplied battery pack is six months.

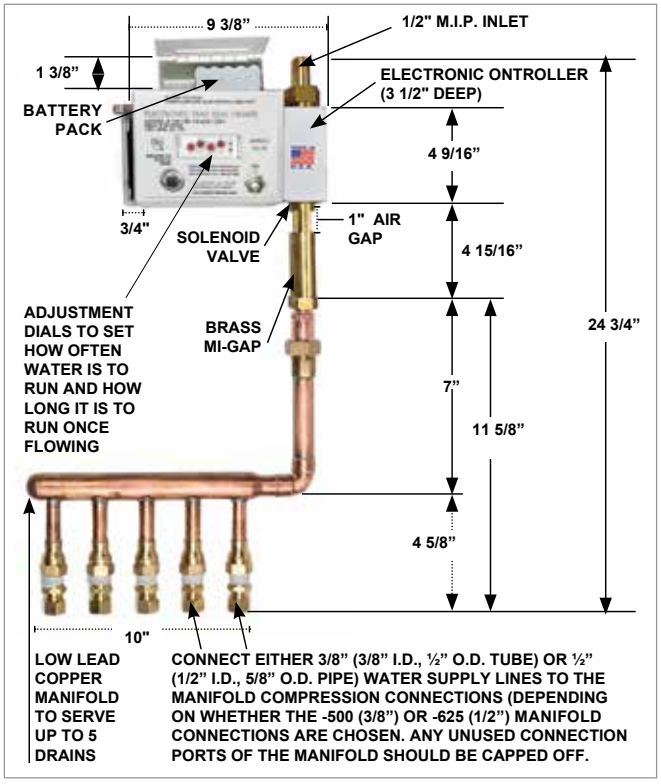

ELECTRONIC TRAP SEAL PRIMER WITH AIR GAP, COPPER MANIFOLD, CONTROL PANEL IN ENCLOSURE

MI-300-ENC

The MI-300-ENC is manufactured with a stainless steel solenoid valve, air gap, copper manifold and electronic controller. The water discharge frequency can be adjusted to meet the building's needs. The MI-300-ENC can be located anywhere in the water supply. A manifold is connected to the bottom of the MI-300-ENC to serve up to 5 drains. The MI-300-ENC is practical for infrequently used buildings such as convention centers and sports facilities. The MI-300-ENC is manufactured in accordance with ANSI/ASME A112.1.2 air gap in plumbing systems Standard. UA 18x18 access door is suggested for access to the MI-300-ENC when installed in the wall.

MI-300-ENC			
MODEL NO.	DESCRIPTION	LIST PRICE	SHIPPING WT.
MI-300-500-ENC-24VDC	connections for 1/2" piping, 24VDC	See current TSP price book.	8 lbs.
MI-300-625-ENC-24VDC	connections for 5/8" piping, 24VDC		8 lbs.
MI-300-500-ENC-120VAC	connections for 1/2" piping, 120VAC		8 lbs.
MI-300-625-ENC-120VAC	connections for 5/8" piping, 120VAC		8 lbs.
MI-300-500-ENC-220VAC	connections for 1/2" piping, 220VAC		8 lbs.
MI-300-625-ENC-220VAC	connections for 1/2" piping, 220VAC		8 lbs.

The MI-300 Series of electronic trap seal primers are tested and third party listed to the A.S.S.E. 1044 Standard.

Specify Suffix - LM for MI-300-ENC without the copper manifold for single drain line use. (1/2" F.I.P. connection) and **See current TSP price book.**

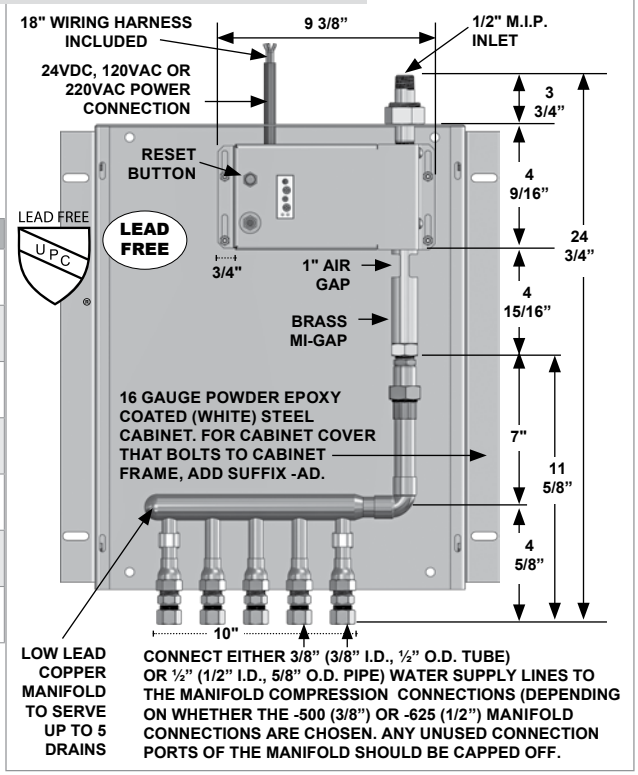

24VAC direct connect electrical supply is also available, Specify Suffix -24VAC. No Add.

"MIFAB trap electronic trap primers are simple to install, easy to get and my go to for every job" – Laine West, Owner, WWF Contractors, Sacramento, CA

MI-300-DU

ELECTRONIC TRAP SEAL PRIMER WITH AIR GAP, DISTRIBUTION UNIT AND CONTROL PANEL

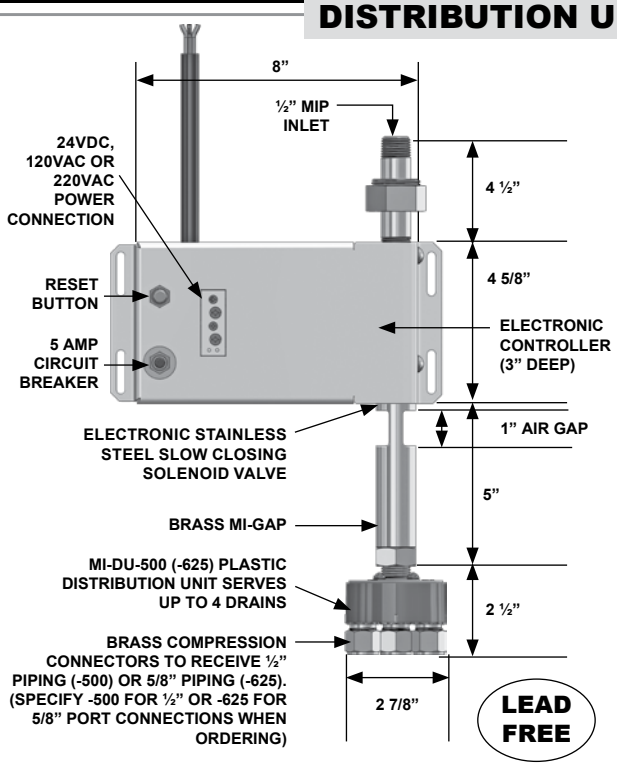

24VAC direct connect electrical supply is also available, Specify Suffix -24VAC.

The MI-300-DU is manufactured with a copper air gap, stainless steel body ½” solenoid valve, and 1-4 ports distribution unit (specify -500 for 1/2” or -625 for 5/8” port connections when ordering). Electronic components to include single point power connection at 120VAC, 220VAC or 24VDC, manual override switch, 5 amp breaker, 24 hour timer with relay and adjustable delay. 100 p.s.i. operating pressure.

The MI-300-DU is manufactured in accordance to the ANSI/ASME A112.1.2 air gap in plumbing systems Standard.

MI-300-DU			
MODEL NO.	DESCRIPTION	LIST PRICE	SHIPPING WT.
MI-300-500-DU-24VDC	connections for 1/2" piping, 24VDC	See current TSP price book.	7 lbs.
MI-300-625-DU-24VDC	connections for 5/8" piping, 24VDC		7 lbs.
MI-300-500-DU-120VAC	connections for 1/2" piping, 120VAC		7 lbs.
MI-300-625-DU-120VAC	connections for 5/8" piping, 120VAC		7 lbs.
MI-300-500-DU-220VAC	connections for 1/2" piping, 220VAC		7 lbs.
MI-300-625-DU-220VAC	connections for 5/8" piping, 220VAC		7 lbs.

MI-350-DU

ELECTRONIC TRAP SEAL PRIMER WITH AIR GAP, DISTRIBUTION UNIT AND CONTROL PANEL IN ENCLOSURE

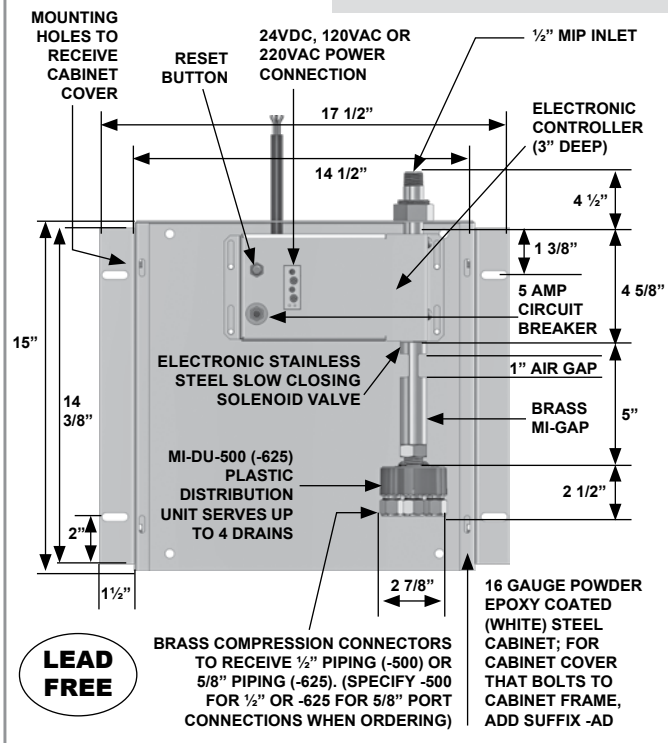

24VAC direct connect electrical supply is also available, Specify Suffix -24VAC.

The MI-350-DU is manufactured with a copper air gap, stainless steel body ½” solenoid valve, and 1-4 ports distribution unit (specify -500 for 1/2” or -625 for 5/8” port connections when ordering). In enclosure electronic components to include single point power connection at 120VAC, 220VAC or 24VDC, manual override switch, 5 amp breaker, 24 hour timer with relay and adjustable delay. 100 p.s.i. operating pressure. A powder epoxy coated steel enclosure box is included.
The MI-350-DU is manufactured in accordance to the ANSI/ASME A112.1.2 air gap in plumbing systems Standard.

MI-350-DU			
MODEL NO.	DESCRIPTION	LIST PRICE	SHIPPING WT.
MI-350-500-DU-24VDC	connections for 1/2" piping, 24VDC	See current TSP price book.	17 lbs.
MI-350-625-DU-24VDC	connections for 5/8" piping, 24VDC		17 lbs.
MI-350-500-DU-120VAC	connections for 1/2" piping, 120VAC		17 lbs.
MI-350-625-DU-120VAC	connections for 5/8" piping, 120VAC		17 lbs.
MI-350-500-DU-220VAC	connections for 1/2" piping, 220VAC		17 lbs.
MI-350-625-DU-220VAC	connections for 5/8" piping, 220VAC		17 lbs.

Design and dimensions are subject to modification. Prices do not include applicable taxes. Visit **www.mifab.com** for the most recent product information.
MIFAB®, Inc., 1321 West 119th Street, Chicago, Illinois 60643-5109, USA Toll Free: 1-800-465-2736 • Fax: 1-773-341-3049
All sales subject to MIFAB's® Terms & Warranties. Please refer to inside front cover. sales@mifab.com • Canada Toll Free: 1-800-387-3880

MI-100, MI-200, MI-300, MI-350 OPTIONAL VARIATIONS

SUFFIX	DESCRIPTION	MI-100, MI-100-DR LIST PRICE		MI-200 LIST PRICE	MI-300, MI-300-DU LIST PRICE	MI-300-BP LIST PRICE
-3P	120VAC 3 Prong plug	See current TSP price book.				
-A	Allen key lock for access door (door is separate)	See current TSP price book.				
-AD	Cabinet Cover (bolted to cabinet frame and non hinged) (16 gauge powder epoxy coated steel (white)	1-10 Outlets 11-20 Outlets 21-30 Outlets (See current TSP price book.)		See current TSP price book.	See current TSP price book.	See current TSP price book.
-ADSS	Stainless Steel (Type 304) Cabinet Cover (bolted to cabinet frame and non hinged) (16 gauge fabricated stainless steel (Type 304)	1-10 Outlets 11-20 Outlets 21-30 Outlets	See current TSP price book			
-BA	Buy American Act compliant product	P.O.A.		P.O.A.	P.O.A.	P.O.A.
-BP	Battery Pack	N/A		No Add	No Add	Included
-C	Cylinder key lock for access door (door is separate)	See current TSP price book.				
-DW	Drywall bead frame for access door (5" cabinet depth) (door is separate)	P.O.A.		See current TSP price book	See current TSP price book	See current TSP price book
-ENC	Steel Cabinet to enclose MI-200 / MI-300 (16 gauge powder epoxy coated steel (white) cabinet	N/A		See current TSP price book.		
-ENCSS	Stainless Steel (Type 304) Cabinet to enclose MI-200 / MI-300 (16 gauge fabricated stainless steel (Type 304)	N/A				
-MFRU	Uninsulated fire rated access door, flush mount (6" minimum overall depth) (door is separate)	(See Access Door Price Book for List Prices)				
-PL	Paddle latch for access door (door is separate)	See current TSP price book		See current TSP price book	See current TSP price book	See current TSP price book
-SS	Stainless Steel (Type 304) Cabinet (16 gauge fabricated stainless steel (Type 304) ***((MI-100, MI-100-DR)***	1-10 Outlets 11-20 Outlets 21-30 Outlets	See current TSP price book	N/A	N/A	N/A
-UA	Access door, prime coated (5" minimum overall depth)	(See Access Door Price Book for List Prices)				
-UASS	Access door, stainless steel (5" minimum overall depth)	(See Access Door Price Book for List Prices)				
-24VAC	24VAC	No Add		No Add	No Add	No Add
-24VDC	24VDC	No Add		No Add	No Add	No Add
-75WS	3/4" water supply connection	Standard		See current TSP price book.		
-120VAC	120VAC	No Add		No Add	No Add	No Add
-220VAC	220VAC	No Add		No Add	No Add	No Add
-500	1/2" compression connection ports	No Add		No Add	No Add	No Add
-625	5/8" compression connection ports	No Add		No Add	No Add	No Add

MI-100-10 illustrated

The MI-100 Series of electronic trap seal primers are tested and third party listed to the A.S.S.E. 1044 Standard.

LEAD FREE UPC ®

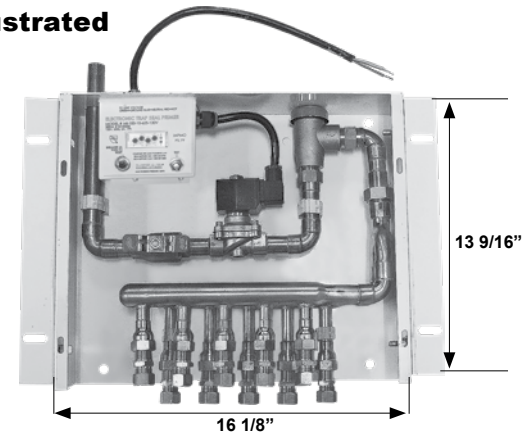

"The MIFAB MR-500-NPB is readily available and we stock this highly durable product for construction. I know most people just want pricing and availability but only needing a 3PSI pressure drop to activate is a win for everyone, including the owner of the project."

– John Rutledge, Manager, Commercial Plumbing Division, Cregger Supply, Columbia, SC

MI-100-20 illustrated

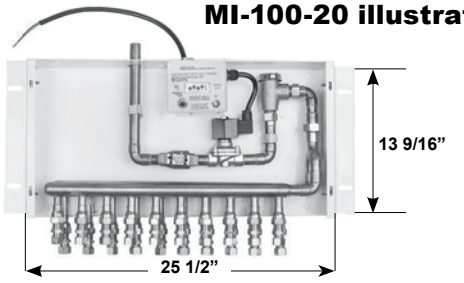

MI-100-30 illustrated

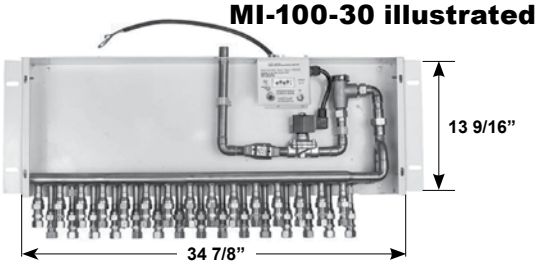

TRAP SEAL PRIMERS

MI-100 Electronic Trap Seal Primer Installation Instructions

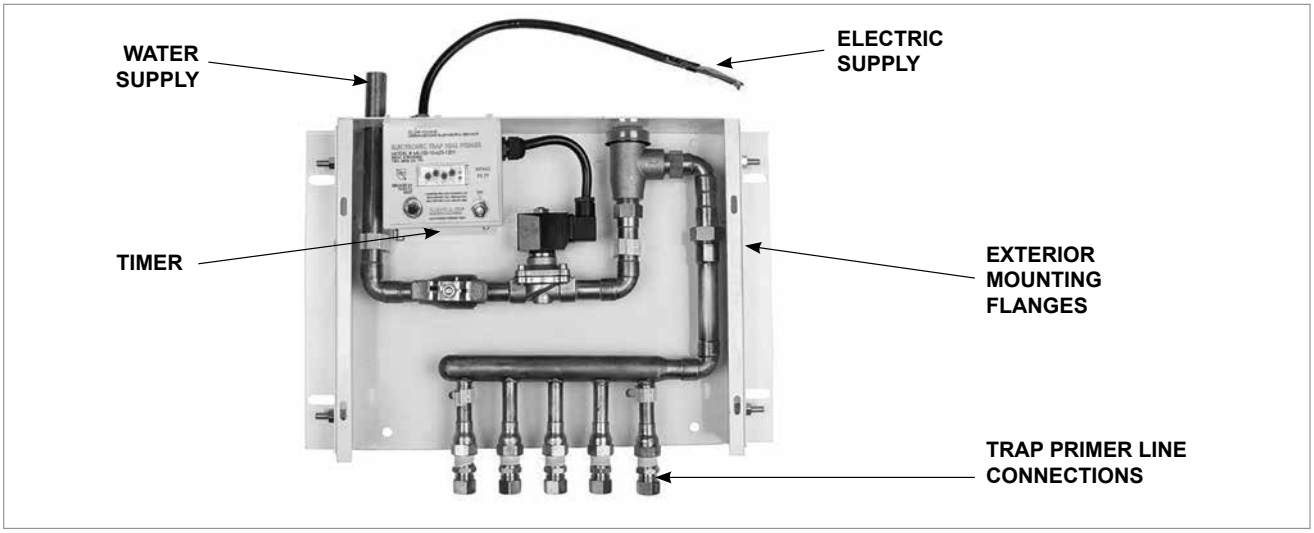

DESCRIPTION: The MI-100 is a pre-assembled electronic trap seal primer programmed to maintain the water seal of up to 30 floor drain traps. It is factory programmed to operate at pre-set flush time intervals and can be modified relative to the site condition or custom requirements. The MI-100 is manufactured with a BEECO vacuum breaker, is easy to install and is maintenance free. Typical installations are schools, hospitals, laboratories, stadiums, bathrooms, manufacturing facilities and food processing facilities. The MI-100 meets LEED credit 3.2 and 5.2 for water reduction and regional material usage.

APPROVALS: The MI-100 Series is tested and third party certified to the ASSE 1044 electronic trap seal primer Standard and listed with I.A.P.M.O. MIFAB® can manufacture it with either 24VDC, 120VAC or 220VAC electrical connections.

Note: All of MIFAB's electronic trap seal primers ordered with the 24VDC power option are equipped with a 120VAC plug adapter. The 120VAC plug adapter is designed to plug into a standard 120VAC three prong outlet. The plug adapter converts the voltage from 120VAC to 24VDC. The electronic trap seal primer internal components operate on the 24VDC supplied by the plug adapter.

INSTALLATION GUIDELINES:

1) Properly mount the MI-100 to the wall with # 14 wood or metal screws. It must be level and square. The MI-100 should be secured between wall studs or on the finished wall as close as possible to the drains being serviced.

2) The MI-100 is supplied with exterior mounting flanges for flush to the wall installations. For surface mount installations, remove the exterior mounting flanges and use the holes in the back of the cabinet to secure it to the wall.

3) The MI-100 must be installed a minimum of 12" above the highest drain being served. Note that the MI-100 should not be considered a pressure feed trap priming system. The manifold within the MI-100 must always be installed so that it is higher than the floor drain traps that it serves. The supply lines from the manifold to the floor drain traps should always be sloped to ensure proper water flow from the manifold to the floor drain traps. The MI-100 can be installed up to 100 feet away from the drains they serve as long as the MI-100 is installed high enough so that there is enough slope from the MI-100 to the drains to ensure water flow.

4) Properly connect the electric and water supply lines by following local codes and guidelines. The water supply should be connected to the 3/4" copper tube located on the top of the MI-100. Connect the trap primer supply lines to the manifold in the MI-100. The black wire is "hot", the white wire is "neutral" and the green wire is "ground". Note that the MI-100-24VDC model is always supplied with a 24 volt converter plug that plugs directly into a 120 volt wall outlet.

5) Connect either 3/8" copper (3/8" I.D., ½" O.D. tube) or ½" copper (1/2" I.D., 5/8" O.D. pipe) water supply lines to the manifold connections (depending on whether the -500 (1/2") or -625 (5/8") manifold connections are chosen. Any unused connection ports of the manifold should be capped off. To do this, remove the entire compression connection from the underside of the manifold and then thread a ½" M.I.P. plug into the female threaded opening in the manifold.

6) Ensure that the water supply (with a minimum of 20 psig) is connected and then turn on power to the device. Ensure that the ball valve is open. The MI-100 will then cycle for a half second. Press the Test Button to repeatedly prime the unit. The Test Button may need to be pressed multiple times in order to have water reach all of the drains. Observe for any leaks within the MI-100 piping system. Ensure that all lines are free of debris.

Design and dimensions are subject to modification. Prices do not include applicable taxes. Visit **www.mifab.com** for the most recent product information.
MIFAB®, Inc., 1321 West 119th Street, Chicago, Illinois 60643-5109, USA Toll Free: 1-800-465-2736 • Fax: 1-773-341-3049
All sales subject to MIFAB's® Terms & Warranties. Please refer to inside front cover. sales@mifab.com • Canada Toll Free: 1-800-387-3880

TIMER ADJUSTMENT:

The pre-set timer operates a normally closed stainless steel slow closing solenoid valve. The timer consists of four adjustments dials. The “T1” time – this is the amount of time in between flow cycles and is adjustable from 0.1 second - 100 days (10 selections). The “T2” time – this is the amount of time that the unit is flowing water to the traps and is adjustable from 0.1 second - 100 days (10 selections). The MI-100 models are factory set to turn the stainless steel solenoid valve “ON” every eight hours for 8 seconds. MIFAB® estimates that when the line pressure is 40 p.s.i., 12 ounces of water will flow from the MI-100 manifold system for every half second that the stainless steel solenoid valve is on. Note that cold climate installations (meat lockers and cold storage areas) have an increased rate of evaporation than temperate areas and will therefore need more water flow to the floor drain traps to ensure that there is a constant water seal in the floor drain traps.

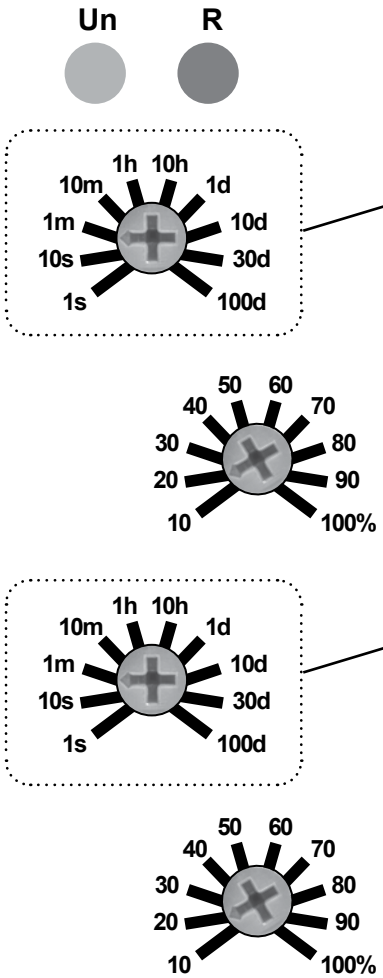

GRT8-S1

T1: HOW LONG THE UNIT STAYS ON

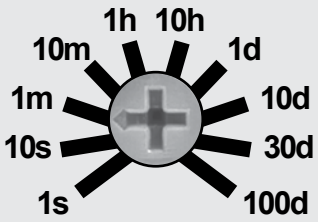

0.1 SECOND ~ 100 DAUS ADJUSTABLE

T2: HOW OFTEN THE UNIT TURNS ON

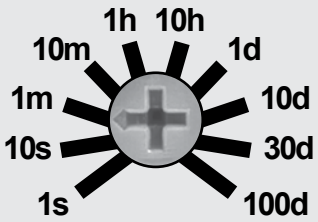

0.1 SECOND ~ 100 DAUS ADJUSTABLE

Percentage is under t1/t2 dial and works as a percentage of the set time. For example, If you want the unit to turn on every 8 hours for 8 seconds, the timer should be set to:

T1 SET TO 10H
T1 PERCENTAGE SET TO 80%
10HRS X 80%= 8HRS.

T2 SET TO 10S
T2 PERCENTAGE SET TO 80%
10S X 80%= 8SEC.

“Since switching to MIFAB® trap seal primers, we have found that our customers prefer them over others for simple adjustment, and ease of installation. It is an easy win for us and our customers!”

– Jon Perkins Sr, Manager, Sonoran Plumbing Supply, AZ

MI-100-MFRU

ELECTRONIC TRAP SEAL PRIMER - WITH FIRE RATED ACCESS DOOR

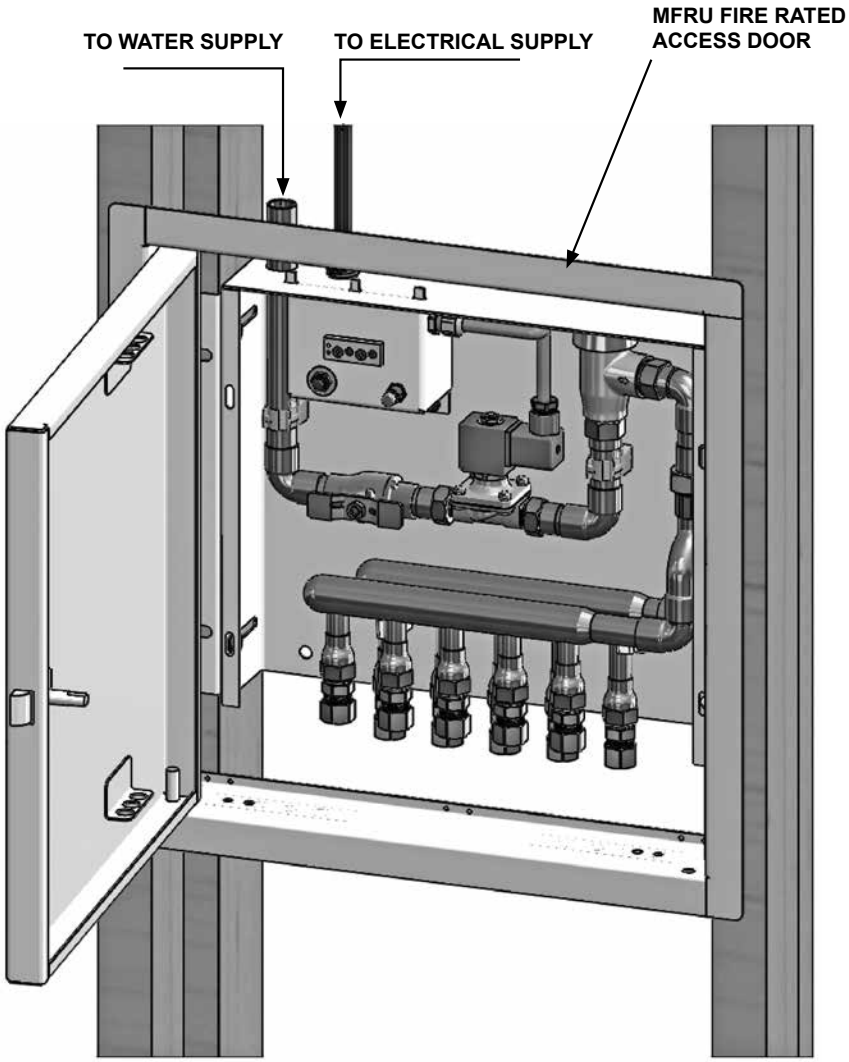

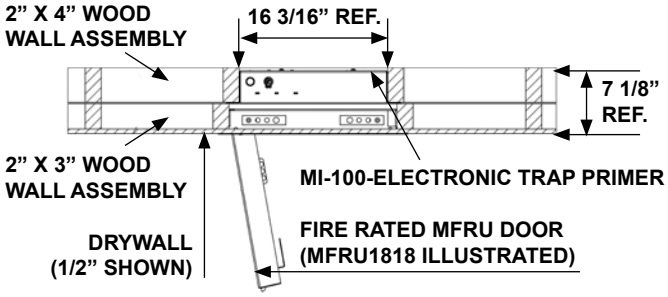

MI-100 ELEC. TRAP PRIMER	MFRU DOOR TO USE
MI-100-5 & MI-100-10	MFRU1818
MI-100-15 & MI-100-20	MFRU3030
MI-100-25 & MI-100-30	MFRU3636

Many construction projects require fire rated walls to maintain the fire rating of the wall system within the building. Penetrations within these walls must maintain the fire rating. MIFAB offers the -MFRU optional variation which is a fire rated access door installed with the MI-100 electronic trap seal primer assembly to maintain the wall fire rating.

Design and dimensions are subject to modification. Prices do not include applicable taxes. Visit **www.mifab.com** for the most recent product information.
MIFAB®, Inc., 1321 West 119th Street, Chicago, Illinois 60643-5109, USA
Toll Free: 1-800-465-2736 • Fax: 1-773-341-3049
sales@mifab.com • Canada Toll Free: 1-800-387-3880
All sales subject to MIFAB's® Terms & Warranties. Please refer to inside front cover.

MI-600 ABS OR PVC "P-TRAP" TRAP SEAL PRIMER CONNECTOR

MI-600

NOTE: 1/2" connections for 3/8" copper pipe.
5/8" connections for 1/2" copper pipe.

SEE CURRENT TSP PRICE BOOK FOR LIST PRICES AND DISCOUNT STRUCTURE OF MI-600 SERIES OF TRAP SEAL PRIMERS

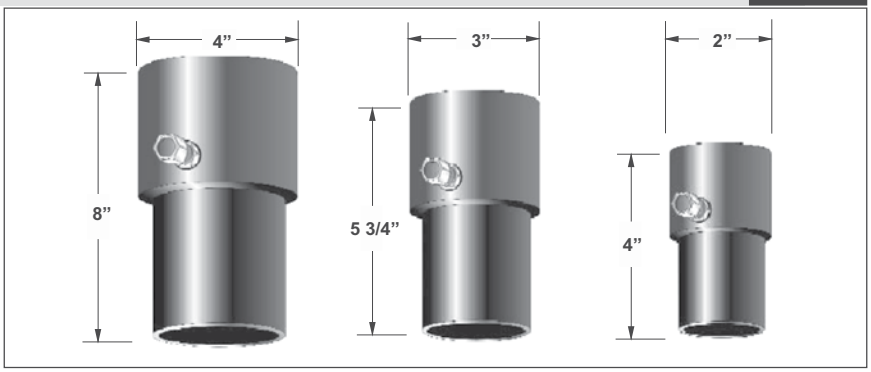

MODEL NO.	CONNECTION SIZE	COMPRESSION CONNECTION SIZE	MATERIAL	CARTON WEIGHT (Lbs.)	CARTON QTY.	WEIGHT (Lbs.)	LIST PRICE
MI-602	2"	1/2"	ABS	.30	24	7.20	See current TSP Price Book
MI-603	3"	1/2"	ABS	.50	18	9.00	
MI-604	4"	1/2"	ABS	.70	12	8.40	
MI-612	2"	5/8"	ABS	.30	24	7.2	
MI-613	3"	5/8"	ABS	.50	18	9.00	
MI-614	4"	5/8"	ABS	.70	12	8.40	
MI-622	2"	1/2"	PVC	.30	24	7.20	
MI-623	3"	1/2"	PVC	.50	18	9.00	
MI-624	4"	1/2"	PVC	.70	12	8.40	
MI-632	2"	5/8"	PVC	.30	24	7.20	
MI-633	3"	5/8"	PVC	.50	18	9.00	
MI-634	4"	5/8"	PVC	.70	12	8.40	

MI-600-50 CAST IRON P-TRAP SEAL PRIMER CONNECTOR

POLISHED CHROME PLATED BRASS P-TRAP

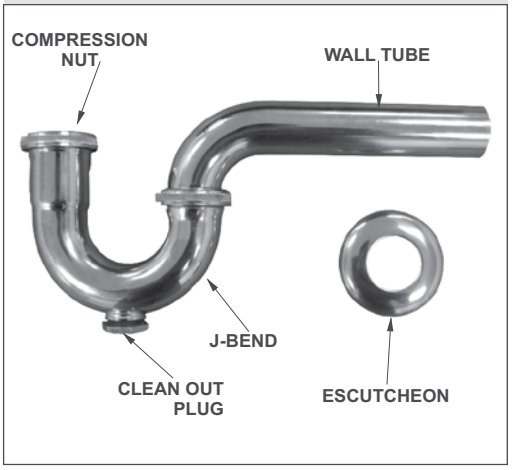

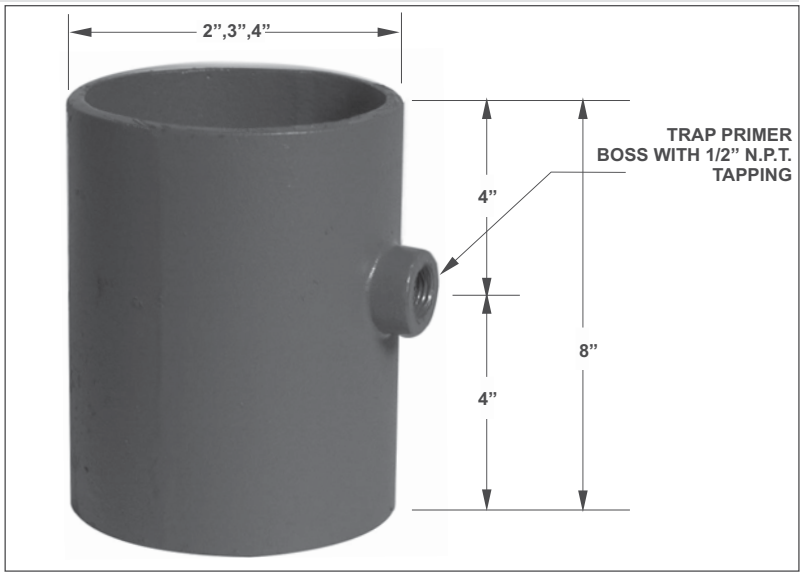

MODEL NUMBER	PIPE SIZE	DESCRIPTION	LIST PRICE
MI-602,3,4-50	2", 3", 4"	Cast iron Trap Primer Adapter	$ 282.00

MI-600-50 OPTIONAL VARIATIONS:

SUFFIX	DESCRIPTION	LIST PRICE
-13	All galvanized	$ 143.00

MI-730

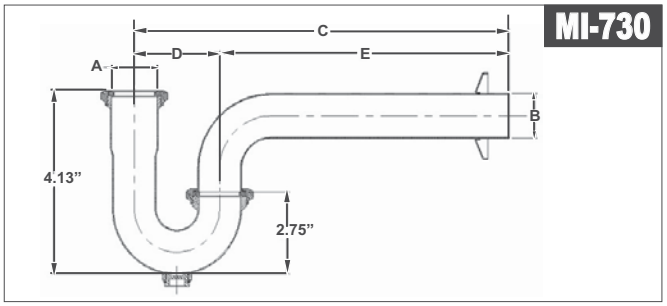

MI-730

MODEL NUMBER	A SLIP NUT INLET	B OUTLET	GAUGE	C	DIMENSIONS D	E	LIST PRICE
MI-730-125	1 1/4"	1 1/4"	17	11 1/4"	3 1/4"	8"	$ 467.00
MI-730-150	1 1/2"	1 1/2"	17	12 1/2"	3 1/2"	9"	$ 529.00

MI-700 GRAVITY FED TRAP SEAL PRIMERS MI-700

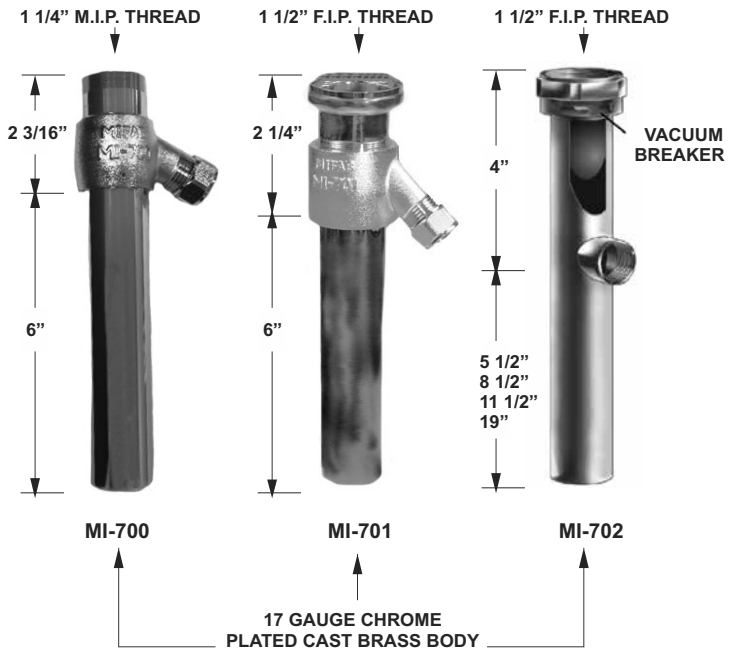

MIFAB's MI-700 Series trap seal primers are engineered to prime one floor drain trap that is no further than twenty feet from the fixture supplying the prime. A 1/2" (13) O.D. copper make-up water line connecting the trap seal primer to the floor drain trap is recommended for the M-700 & MI-701

Note: S.S. braided supply pipe w/escutcheon is available for the MI-702 (option -BH)

SEE CURRENT TSP PRICE BOOK FOR LIST PRICES AND DISCOUNT STRUCTURE OF MI-700 SERIES OF GRAVITY FED TRAP SEAL PRIMERS

MODEL NO.	DESCRIPTION	LIST PRICE	SHIP WEIGHT (Lbs.)	CARTON QTY.	CARTON WEIGHT (Lbs.)
MI-700	1 1/4" Lavatory Trap seal Primer	See current TSP Price Book	0.75	20	15.00
MI-701	1 1/2" Valve Trap seal Primer		1.25	20	25.00
MI-702-9.5	1 1/2" Valve Trap seal Primer w/ VB, 9 1/2"long		1.25	20	25.00
MI-702-12.5	1 1/2" Valve Trap seal Primer w/ VB, 12 1/2" long		1.50	20	30.00
MI-702-15.5	1 1/2" Valve Trap seal Primer w/ VB, 15 1/2" long		1.75	20	35.00
MI-702-23	1 1/2" Valve Trap seal Primer w/ VB, 23" long		2.25	20	45.00

MI-750 TAILPIECE TRAP SEAL PRIMER WITH BRAIDED CONNECTING HOSE MI-750

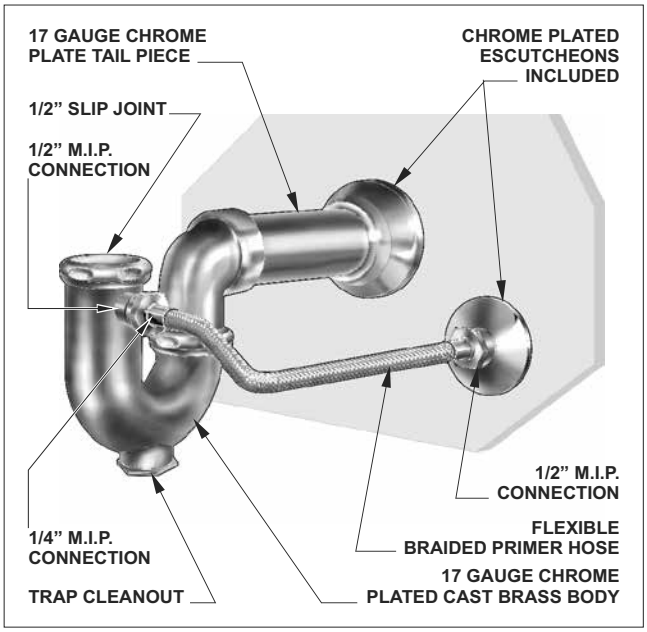

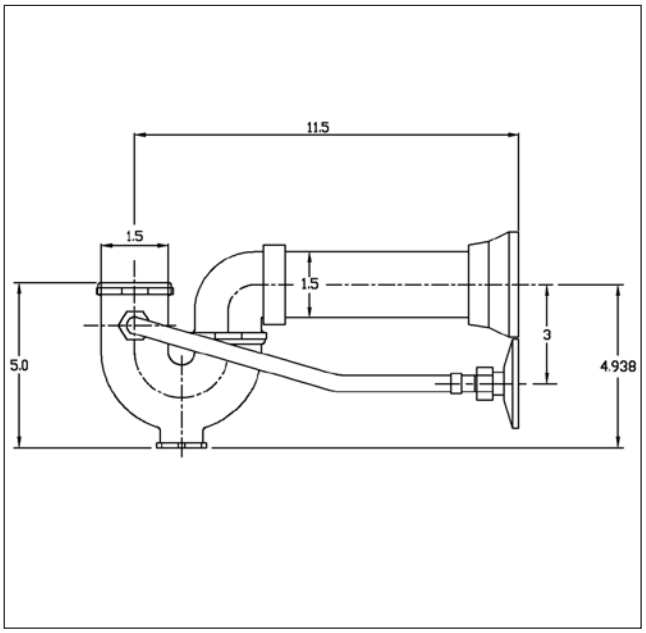

Note: Both 1 1/2" and 1 1/4" slip joint nuts are provided.

MODEL NUMBER	DESCRIPTION	LIST PRICE
MI-750	Tailpiece Trap Seal Primer	$ 840.00

TRAP SEAL PRIMERS

Design and dimensions are subject to modification. Prices do not include applicable taxes. Visit **www.mifab.com** for the most recent product information.
MIFAB®, Inc., 1321 West 119th Street, Chicago, Illinois 60643-5109, USA Toll Free: 1-800-465-2736 • Fax: 1-773-341-3049
All sales subject to MIFAB's® Terms & Warranties. Please refer to inside front cover. sales@mifab.com • Canada Toll Free: 1-800-387-3880

Specification: MIFAB MI-GARD® Series inline floor drain trap seal with UV resistant ABS plastic frame, silicone rubber sealing flapper and four flexible sealing ribs. Tested and certified to the ASSE 1072 Standard and listed with IAPMO. Specify connection size (1 1/2", 2”, 3”, 3 1/2”, 4" or 6”)

Function: Used in the outlet connections of floor drain bodies, or the inside of floor drain strainers to seal the opening to prevent odors, sewer gases and insects from entering up through the floor drain grate. The MI-GARD®'s four flexible silicone sealing ribs ensure easy installation into openings that have variations in size. The MI-GARD® will open to allow drainage and close when there is no water flow. The MI-GARD® can be used in either new construction or retro-fit applications where trap primers were never installed.

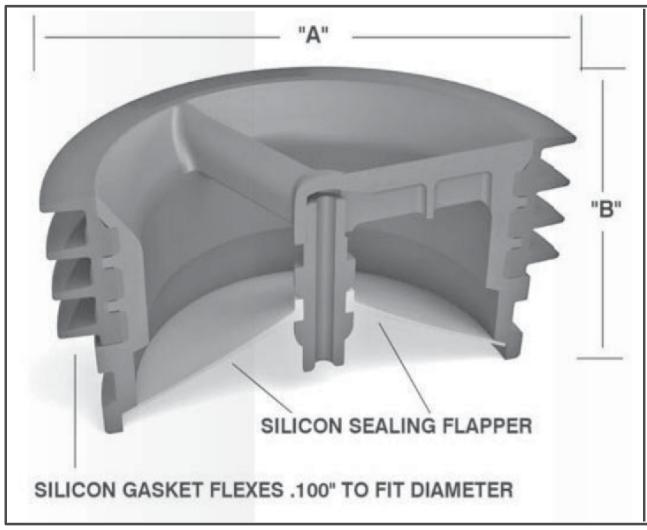

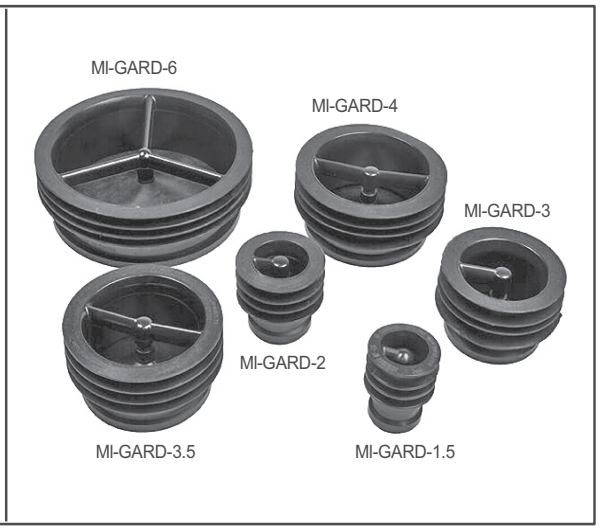

MODEL NUMBER	"A" (PIPE SIZE)	"B" (HEIGHT)
MI-GARD-1.5	1 1/2" (38)	2" (52)
MI-GARD-2	2" (51)	2" (52)
MI-GARD-3	3" (76)	2" (52)
MI-GARD-3.5	3 1/2" (89)	2" (52)
MI-GARD-4	4" (102)	2" (52)
MI-GARD-6	6" (152)	2" (52)

MI-GARD® prevents the following from entering through the top of loor drains:

- Odors and sewer gases
- Insects

Note: The MI-GARD-6 is designed in accordance with industry standards but is not tested and certified.

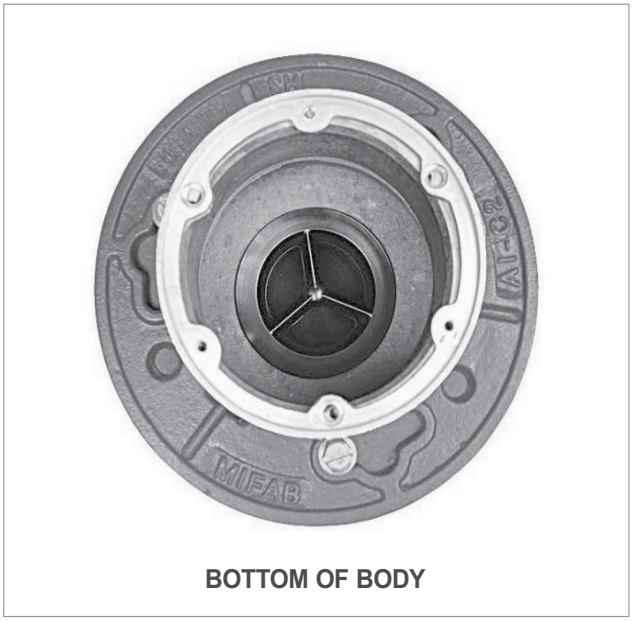

BOTTOM OF BODY

TOP OF STRAINER

Installation Instructions: The MI-GARD-1.5 (1 1/2"), MI-GARD-2 (2"), MI-GARD-3 (3"), MI-GARD-3.5 (3 1/2"), MI-GARD-4 (4") and MI-GARD-6 (6") Floor Drain Trap Seal Devices install into either the outlet connections of floor drain bodies or into the inside of floor drain strainers.
To install into the outlet connections of floor drain bodies, remove the grate or strainer and place the appropriate size MI-GARD product (match the opening size 1 1/2", 2", 3", 3 1/2", 4" or 6" with the product size) into the inside of the floor drain body outlet connection. The four flexible silicone exterior sealing ribs ensure easy installation into openings that have variations in size.

LIST PRICES

MODEL NUMBER	SIZE	LIST PRICE	CARTON QUANTITY
MI-GARD-1.5	1 1/2"	See current TSP Price Book	72
MI-GARD-2	2"		24
MI-GARD-3	3"		24
MI-GARD-3.5	3 ½"		24
MI-GARD-4	4"		24
MI-GARD-6	6"		1

LIST PRICES FOR REPAIR PARTS - REPLACEMENT SILICONE SEALING FLAPPERS

MODEL NUMBER	DESCRIPTION	LIST PRICE
MI-GARD-1.5-FLAP	Replacement silicone sealing flapper for MI-GARD-1.5	See current TSP Price Book
MI-GARD-2-FLAP	Replacement silicone sealing flapper for MI-GARD-2	
MI-GARD-3-FLAP	Replacement silicone sealing flapper for MI-GARD-3	
MI-GARD-3.5-FLAP	Replacement silicone sealing flapper for MI-GARD-3.5	
MI-GARD-4-FLAP	Replacement silicone sealing flapper for MI-GARD-4	
MI-GARD-6-FLAP	Replacement silicone sealing flapper for MI-GARD-6	

MI-GARD Flapper

MI-GARD Counter Display

The silicone sealing flapper can be easily removed from all MI-GARD models and replaced with a new flapper.

Design and dimensions are subject to modification. Prices do not include applicable taxes. Visit **www.mifab.com** for the most recent product information.
MIFAB®, Inc., 1321 West 119th Street, Chicago, Illinois 60643-5109, USA Toll Free: 1-800-465-2736 • Fax: 1-773-341-3049
All sales subject to MIFAB's® Terms & Warranties. Please refer to inside front cover. sales@mifab.com • Canada Toll Free: 1-800-387-3880

MIFAB®

WATER HAMMER ARRESTORS

WATER HAMMER ARRESTOR SIZING

SINGLE AND MULTIPLE FIXTURE BRANCH LINES

The water hammer arrestor sizing procedure for single and multiple fixtures described below conforms to that established by the American Society of Sanitary Engineers in their Standard ASSE-1010. Selection of the water hammer arrestor is based upon the total quantity of Fixture-Units on each cold and hot water branch line.

FIXTURE-UNIT LISTING

Determine the total number of Fixture-Units on each branch line by referring to the list of fixtures in Table One.

WATER HAMMER ARRESTOR SELECTION

Refer to Table Two and select the water hammer arrestor model with proper Fixture-Unit capacity. In long batteries of fixtures over 20 feet in length, more than one water hammer arrestor will be required. (See placement data shown below.)

WATER HAMMER ARRESTOR PLACEMENT DATA

On multiple fixture branch lines up to 20 feet in length, the water hammer arrestor should be installed on the branch line between the last two fixtures being served. The water hammer arrestor should have a Fixture-Unit rating equal to or greater than the total Fixture-Units connected to the branch line.

On multiple fixture branch lines over 20 feet in length, two water hammer arrestors should be used on each line with the second unit placed at the approximate midpoint of the line. The sum of the Fixture-Unit ratings of the water hammer arrestors on each branch should be equal to or greater than the total Fixture-Units connected to the branch line.

TABLE ONE

FIXTURE	TYPE OF SUPPLY CONTROL	WEIGHT IN FIXTURE UNITS			
		PUBLIC		PRIVATE	
		C.W.	H.W.	C.W.	H.W.
Water Closet	Flush Valve	10	-	6	-
Water Closet	Flush Tank	5	-	3	-
Pedestrial Urinal	Flush Valve	10	-	-	-
Stall or Wall Urinal	Flush Valve	5	-	-	-
Stall or Wall Urinal	Flush Tank	3	-	-	-
Lavatory	Faucet	1 1/2	1 1/2	1	1
Bathtub	Faucet	2	2	1 1/2	1 1/2
Shower Head	Mixing Valve	2	2	1	2
Bathroom Group	Flush Valve Closet	-	-	8	3
Bathroom Group	Flush Tank Closet	-	-	6	3
Separate Shower	Mixing Valve	-	-	1	2
Service Sink	Faucet	3	3	-	-
Laundry Tubs (1-3)	Faucet	-	-	3	3
Combination Fixture	Faucet	-	-	3	3

TABLE TWO

Water Hammer Arrestor Model No.	A	B	C	D	E	F
Fixture Unit Capacity	1-11	12-32	33-60	61-113	114-154	155-330

NOTES:

(1) All sizing data in this book are based on flow velocities of 10 feet per second or less.
(2) When the static water pressure in the line exceeds 65 psig, contact the MIFAB® Engineering Department.
(3) If the fixture-unit total has 1/2" fraction, it is to be "rounded-up" to the next larger whole number. If the total is 11 1/2 fixture units, use 12 fixture units.

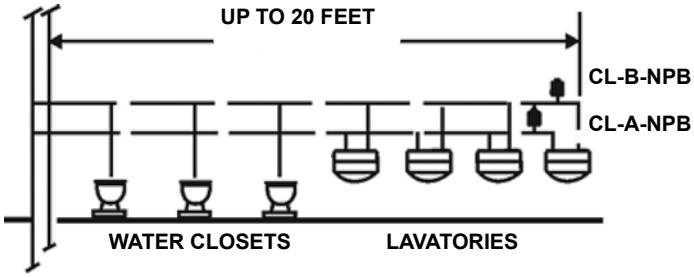

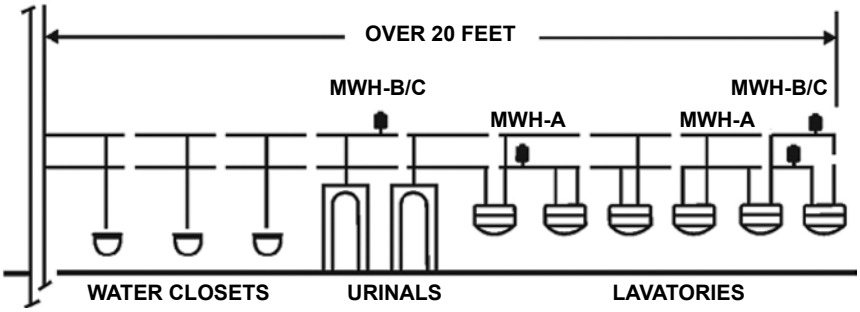

Design and dimensions are subject to modification. Prices do not include applicable taxes. Visit **www.mifab.com** for the most recent product information.
MIFAB®, Inc., 1321 West 119th Street, Chicago, Illinois 60643-5109, USA Toll Free: 1-800-465-2736 • Fax: 1-773-341-3049
All sales subject to MIFAB's® Terms & Warranties. Please refer to inside front cover. sales@mifab.com • Canada Toll Free: 1-800-387-3880

MWH-NPB PISTON TYPE WATER HAMMER ARRESTORS

- Thick walled seamless "K" copper body.
- RYTON™ PPS piston with two EPDM o-rings (Parco#5778-80) with FDA(Dow Corning™#111) approved silicone lubricant. Ribbed piston design reduces secondary shock and flared piston skirt prevents hard particles suspended in the water supply from contacting the o-rings to provide increased product life.
- Large volume air chamber provides better dampening for superior water hammer arrestor performance.
- Temperature range: maximum working temperature is 250 °F
- Operating pressure: Water hammer arrestors are engineered for a flowing pressure of up to 350 p.s.i. If the system pressure exceeds 350 p.s.i., a pressure reducing valve should be installed upstream of the arrestor to lower the line pressure.
- Engineered to limit the system surge pressure of 1,500 p.s.i. Tested and certified to the A.S.S.E. 1010 and ANSI A112.26.1M Standards and listed with I.A.P.M.O. Patent # 6,539,976.

CL-A-NPB illustrated

LEAD FREE

NOT RECOMMENDED FOR INSTALLATION IN HORIZONTAL OR INVERTED POSITION

MODEL NUMBER	ASSE RATING	FIXTURE UNITS	(A) HEIGHT	(B) PIPE SIZE	(C) WRENCH FLATS	LIST PRICE
MWH-A-NPB	A	1-11	4 1/2”	1/2”	1 1/8”	**$ 298.00**
MWH-B-NPB	B	12-30	6 3/4”	3/4”	1 1/8”	**$ 592.00**
MWH-C-NPB	C	31-60	6 3/4”	1”	1 1/8”	**$ 895.00**
MWH-D-NPB	D	61-113	10 1/2”	1 1/4”	1 3/4”	**$ 2241.00**
MWH-E-NPB	E	114-154	11 1/4”	1 1/2”	2”	**$ 2,727.00**
MWH-F-NPB	F	155-330	13”	2”	2 1/2”	**$ 3119.00**

WHB STAINLESS STEEL BELLOWS TYPE WATER HAMMER ARRESTORS

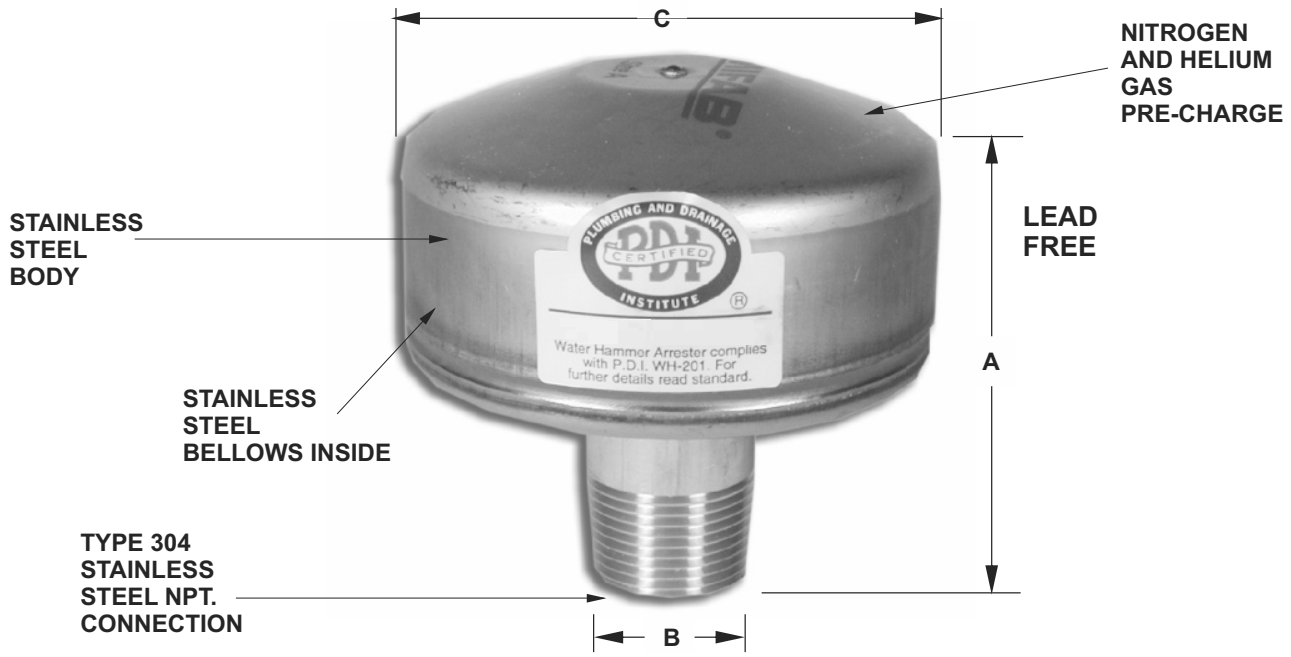

MODEL NUMBER	PDI RATING	FIXTURE UNITS	PIPE SIZE	"A" HEIGHT	"B" CONN. SIZE	"C" DIAMETER	LIST PRICE
WHB-A	A	1-11	3/4"	3 3/8"	3/4"	3 3/8"	**$ 708.00**
WHB-B	B	12-30	1"	4"	1"	3 3/8"	**$ 1424.00**
WHB-C	C	31-60	1"	4 3/8"	1"	3 3/8"	**$ 2142.00**
WHB-D	D	61-113	1"	5 3/8"	1"	3 3/8"	**$ 5355.00**
WHB-E	E	114-154	1"	7 1/4"	1"	3 3/8"	**$ 6044.00**
WHB-F	F	155-330	1"	7 1/4"	1"	3 3/8"	**$ 7427.00**

Design and dimensions are subject to modification. Prices do not include applicable taxes. Visit **www.mifab.com** for the most recent product information.
MIFAB®, Inc., 1321 West 119th Street, Chicago, Illinois 60643-5109, USA Toll Free: 1-800-465-2736 • Fax: 1-773-341-3049
All sales subject to MIFAB's® Terms & Warranties. Please refer to inside front cover. sales@mifab.com • Canada Toll Free: 1-800-387-3880

A1 BODY

FOR: F1000, F1100, F1300, F1320 and **F1420** Series floor drains, **R1100** Series roof drains, **C1000 and C1100** Series cleanouts

PART NO.	DESCRIPTION	PIPE SIZE	CARTON QTY.	CARTON WT. (LBS.)	LIST PRICE
A1-2,3,4NH-7	Cast Iron, no hub with ½" NPT trap seal primer tapping	2", 3", 4"	8/8/8	39/39/39	$ 152.00
A1-5,6NH-7	Cast Iron, no hub with ½" NPT trap seal primer tapping	5", 6"	8/8	37/87	$ 859.00
A1-2,3,4-30-7	PVC, Socket Weld with ½" NPT trap seal primer tapping	2", 3", 4"	12/10/8	8/7.5/6.5	$ 152.00
A1-2,3,4-31-7	ABS, Socket Weld with ½" NPT trap seal primer tapping	2", 3", 4"	12/10/8	8/7.5/6.5	$ 152.00
A1-2,3,4P-7	Cast Iron, push-on with ½" NPT trap seal primer tapping	2", 3", 4"	8/8/8	45/45/56	$ 152.00
A1-6P-7	Cast Iron, push-on with ½" NPT trap seal primer tapping	6"	4	50	$ 859.00
A1-2,3,4T-7	Cast Iron, threaded with ½" NPT trap seal primer tapping	2", 3", 4"	8/8/8	40/40/40	$ 259.00
A1-5T-7	Cast Iron, threaded with ½" NPT trap seal primer tapping	5"	4	40	$ 859.00
A1-2,3,4X-7	Cast Iron, inside caulk with ½" NPT trap seal primer tapping	2", 3", 4"	4/4/4	45/45/35	$ 152.00
A1-5X-7	Cast Iron, inside caulk with ½" NPT trap seal primer tapping	5"	4	50	$ 859.00
A1-2,3,4-28-7	Cast 304 SS, no hub with ½" NPT trap seal primer tapping	2", 3", 4"	NA	NA	$ 1,733.00
A1-2,3T-90-7	Cast Iron, threaded side outlet	2", 3"	NA	NA	$ 439.00
A1-2,3-90-NH-7	Cast Iron, no hub side outlet	2", 3"	NA	NA	$ 439.00
A1-4T-90-7	Cast Iron, threaded side outlet	4"	NA	NA	$ 687.00
A1-4-90-NH-7	Cast Iron, no hub side outlet	4"	NA	NA	$ 687.00

Find this part in MIFAB literature by this component icon:

A1 BODY

A1-2, 3, 4-90-NH

A1 No Hub side outlet body

A1-2, 3, 4T-90-90-7
A1 Threaded Side Outlet body

A5 BODY

PART NO.	DESCRIPTION	WEIGHT (LBS.)	LIST PRICE
A5-2,3,4,6-NH	Cast iron, no hub connection body	.10	$ 332.00
A5-2,3,4,6X	Cast iron, inside caulk connection body	.10	$ 332.00

PART NO.	DESCRIPTION	WEIGHT (LBS.)	LIST PRICE
C1442	"T-cone" style plastic closure plug w/ neoprene compression gasket, 2"	.50	$ 477.00
C1443	"T-cone" style plastic closure plug w/ neoprene compression gasket, 3"	.75	$ 477.00
C1444	"T-cone" style plastic closure plug w/ neoprene compression gasket, 4"	1.00	$ 477.00

Note: for use in No Hub and Plastic Socket outlet bodies only.

A2 BODY

FOR: F1330C, F1340, F1360, F1430C, F1440, Series Floor Drains, **R1200** Series Roof Drains

PART NO.	DESCRIPTION	PIPE SIZE	WEIGHT (LBS.)	LIST PRICE
A2-2,3,4NH-7	Cast Iron, no hub w/ ½ NPT trap primer tapping	2", 3", 4"	15.00	$ 422.00
A2-5,6NH-7	Cast Iron, no hub w/ ½ NPT trap primer tapping	5",6"	15.00	$ 819.00
A2-8NH-7	Cast Iron, no hub w/ ½ NPT trap primer tapping	8"	18.00	$1,213.00
A2-2,3,4-30-7	PVC, Socket Weld w/ ½ NPT trap primer tapping	2", 3", 4"	14.00	$ 422.00
A2-2,3,4-31-7	ABS, Socket Weld w/ ½ NPT trap primer tapping	2", 3", 4"	14.00	$ 422.00
A2-2,3,4P-7	Cast Iron, push-on w/ ½ NPT trap primer tapping	2", 3", 4"	15.00	$ 422.00
A2-6P-7	Cast Iron, push-on w/ ½ NPT trap primer tapping	6"	15.00	$ 819.00
A2-2,3,4T-7	Cast Iron, threaded w/ ½ NPT trap primer tapping	2", 3", 4"	15.00	$ 529.00
A2-5,6T-7	Cast Iron, threaded w/ ½ NPT trap primer tapping	5",6"	15.00	$ 926.00
A2-2,3,4X-7	Cast Iron, inside caulk w/ ½ NPT trap primer tapping	2", 3", 4"	15.00	$ 422.00
A2-5,6X-7	Cast Iron, inside caulk w/ ½ NPT trap primer tapping	5",6"	15.00	$ 819.00
A2-2,3,4T-90-7	Cast Iron, with threaded side outlet	2", 3", 4"	20.00	$ 903.00
A2-2,3,4-90-NH-7	Cast Iron, with no hub side outlet	2", 3", 4"	22.00	$ 903.00

A3-PG-Transition Body Gasket

List Price A3-PG - Transition Body Gasket **- $81.00**

Find this part in MIFAB literature by this component icon:

A2 BODY

A2-2, 3, 4-90-NH

A2 No Hub side outlet body

A2-2, 3, 4T-90-7
A2 Threaded side outlet body

A3 BODY

List price of **A3** body is **$ 647.00**

A8 BODY

PART NO.	DESCRIPTION	PIPE SIZE	WEIGHT (LBS.)	LIST PRICE
A8-2,3,4NH	Cast iron, no hub	2", 3", 4"	15.00	$ 422.00
A8-5,6NH	Cast iron, no hub	5", 6"	15.00	$ 819.00
A8-3,4X	Cast iron, inside caulk	3", 4"	15.00	$ 422.00
A8-5,6X	Cast iron, inside caulk	5", 6"	15.00	$ 819.00

For -11 and -13 coatings on A1 bodies, see page 37 for List Price adders.
See page 127 for A2 bodies

PART NO.	DESCRIPTION	WEIGHT (LBS.)	LIST PRICE
POG-2	2" Push-on neoprene gasket for all MIFAB A1, A2, A3, A4 bodies (PVC + CI. pipe)	.75	$ 42.00
POG-3	3" Push-on neoprene gasket for all MIFAB A1, A2, A3, A4 bodies (PVC + CI. pipe)	1.00	$ 42.00
POG-4	4" Push-on neoprene gasket for all MIFAB A1, A2, A3, A4 bodies (PVC + CI. pipe)	1.25	$ 42.00
POG-6	6" Push-on neoprene gasket for all MIFAB A1, A2, A3, A4 bodies (CI. pipe) (Black color)	1.75	$ 77.00
POG-6-PVC	6" Push-on neoprene gasket for all MIFAB A1, A2, A3, A4 bodies (PVC pipe only) (White color)	1.75	$ 77.00

POG "PUSH ON GASKET"

Note: Push on gasket fits all plastic schedule 40 & service weight cast iron pipe.
For 6" push on gasket, specify POG-6 or POG-6-PVC for either C.I. or PVC pipe.
Add Suffix - PVC to model number when PVC gasket is required.

PARTS

PARTS

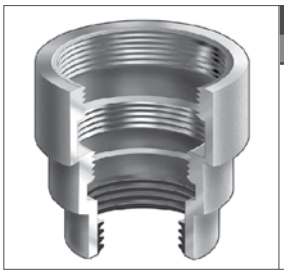

A4 BODY PART NO.	DESCRIPTION	PIPE SIZE	CARTON QTY.	CARTON WT. LBS.	LIST PRICE
A4-2,3,4NH-7	Cast Iron, no hub with trap seal primer tapping	2", 3", 4"	9	20.00	$ 152.00
A4-2,3,4-30-7	PVC Socket Weld with trap seal primer tapping	2", 3", 4"	27(2")/18(3",4")	22/16/17	$ 152.00
A4-2,3,4-31-7	ABS Socket Weld with trap seal primer tapping	2", 3", 4"	27(2")/18(3",4")	22/16/17	$ 152.00
A4-2,3,4P-7	Cast Iron, push-on with trap seal primer tapping	2", 3", 4"	9	43.00	$ 152.00
A4-34B	Threaded brass tapered closure plug fits all A4 bodies			N/A	$ 255.00
A4-34P	Threaded plastic tapered closure plug fits all A4 bodies			N/A	$ 155.00

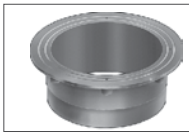

Find this part in MIFAB literature by this component icon:

A7 BODY for R1260 SERIES ROOF DRAINS

PART NO.	DESCRIPTION	PIPE SIZE	WEIGHT (Lbs.)	LIST PRICE
A7-8X	Cast iron, inside caulk with	8"	25.00	$ 1,914.00
A7-10NH	Cast iron, no hub with	10"	24.00	$ 1,914.00
A7-12NH	Cast iron, no hub with	12"	21.00	$ 2,418.00

Find this part in MIFAB literature by this component icon:

CLAMPS

PART NO.	DESCRIPTION	WEIGHT (Lbs.)	LIST PRICE
A1-C1	Low rough-in membrane clamp used where top assembly threads into body	1.50	$ 103.00
A1-C1-28	Low rough-in 304-SS membrane clamp	1.50	$ 1,581.00

Find this part in MIFAB literature by this component icon:

PART NO.	DESCRIPTION	WEIGHT (Lbs.)	LIST PRICE
A1-C2	High rough-in membrane clamp for all 8" diameter A1 bodies to receive threaded top assemblies	2.50	$ 103.00

Find this part in MIFAB literature by this component icon:

PART NO.	DESCRIPTION	WEIGHT (Lbs.)	LIST PRICE
A1-C3	Membrane clamp and dome receiver w/ integral gravel stop adjustable extension ring and/or underdeck clamp for all drains using A1 bodies.	2.00	$ 196.00
A1-C3-CO	A1-C3 with cutaway side	1.75	$ 196.00

Contact MIFAB for correct underdeck clamp to work with A1-4X and a all 5" and 6" outlet A1 bodies. Part number A1-C3-4PU

Find this part in MIFAB literature by this component icon:

PART NO.	DESCRIPTION	WEIGHT (Lbs.)	LIST PRICE
A1-WD	Membrane Clamp and dome receiver with integral 2" water dam for all 8" diameter A1 bodies	3.75	$ 451.00

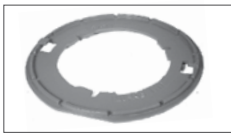

Find this part in MIFAB literature by this component icon:

PART NO.	DESCRIPTION	WEIGHT (Lbs.)	LIST PRICE
A2-C3	Membrane clamp and dome receiver w/ integral gravel stop. Adjustable extension ring and or underdeck clamp for all drains using A2 bodies	6.75	$ 319.00

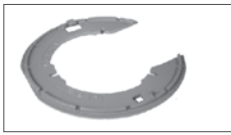

Find this part in MIFAB literature by this component icon:

PART NO.	DESCRIPTION	WEIGHT (Lbs.)	LIST PRICE
A2-C3-CO	Underdeck Clamp with cut-out to install around existing roof drain piping and A2-90 side outlet bodies	5.75	$ 637.00

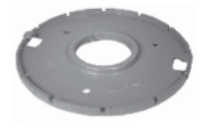

Find this part in MIFAB literature by this component icon:

PART NO.	DESCRIPTION	WEIGHT (Lbs.)	LIST PRICE
A2-C3-W	Membrane clamp and dome receiver threaded for 4" standpipe w/integral gravel stop	9.50	$ 620.00
A2-C3-W6	As above, threaded for 6" standpipe	8.00	$ 812.00
A2-C3-WD	Membrane clamp threaded with 4" NPSM for floor drains	8.50	$ 620.00

Find this part in MIFAB literature by this component icon:

PART NO.	DESCRIPTION	WEIGHT (Lbs.)	LIST PRICE
A2-WD	Membrane clamp and dome receiver w/integral 2" water dam for all drains using A2 bodies	10.00	$ 625.00

Design and dimensions are subject to modification. Prices do not include applicable taxes. Visit **www.mifab.com** for the most recent product information.
MIFAB®, Inc., 1321 West 119th Street, Chicago, Illinois 60643-5109, USA Toll Free: 1-800-465-2736 • Fax: 1-773-341-3049
All sales subject to MIFAB's® Terms & Warranties. Please refer to inside front cover. sales@mifab.com • Canada Toll Free: 1-800-387-3880

CLAMPS HARDWARE PARTS

Find this part in MIFAB literature by this component icon: A368-DC

PART NO.	DESCRIPTION	WEIGHT (LBS.)	LIST PRICE
A368-DC	Deck Clamp and extension ring for all drains using A2-8NH bodies	6.25	$ 319.00

Find this part in MIFAB literature by this component icon: A7-C3

PART NO.	DESCRIPTION	WEIGHT (LBS.)	LIST PRICE
A7-C3	Membrane Clamp and dome receiver w/ integral gravel stop for all drains using A7 bodies	7.50	$ 319.00

Find this part in MIFAB literature by this component icon: A6-UDC

PART NO.	DESCRIPTION	WEIGHT (LBS.)	LIST PRICE
A6-UDC	Under deck clamp for A6 bodies.	6.00	$ 319.00

Find this part in MIFAB literature by this component icon: A7-UDC-10

PART NO.	DESCRIPTION	WEIGHT (LBS.)	LIST PRICE
A7-UDC-10	Underdeck Clamp and/or adjustable extension ring for R1261 10" no hub outlet large capacity roof drain	8.50	$ 319.00

Find this part in MIFAB literature by this component icon: A7-UDC-12

PART NO.	DESCRIPTION	WEIGHT (LBS.)	LIST PRICE
A7-UDC-12	Underdeck Clamp and/or adjustable extension ring for R1262 12" no hub outlet large capacity roof drain	10.00	$ 319.00

Find this part in MIFAB literature by this component icon: A8-UDC

PART NO.	DESCRIPTION	WEIGHT (LBS.)	LIST PRICE
A8-UDC	Under deck clamp for A8 bodies	8.00	$ 319.00

PART NO.	DESCRIPTION	WEIGHT (LBS.)	LIST PRICE
R1810	Universal Membrane Clamp Bolts directly onto all MIFAB A2 bodies and roof drains from the following manufacturers: Josam, J. R. Smith, Wade, Watts & Zurn	8.75	$ 384.00

PART NO.	DESCRIPTION	WEIGHT (LBS.)	LIST PRICE
A5-C3	Membrane clamp and dome receiver w/ integral gravel stop. Adjustable extension ring and/or underdeck clamp for all drains using A5 bodies.	5.00	$ 196.00
A5-WD	Membrane clamp and dome receiver w/ integral 2" water dam for all drains using A5 bodies.	7.50	$ 451.00

A5-C3

A5-WD

PART NO.	DESCRIPTION	WEIGHT (LBS.)	LIST PRICE
HS-1	3 hex head cap screws for assembling membrane clamps to floor and roof drains (5/16" x 7/8")	.20	$ 15.00

Find this part in MIFAB literature by this component icon: HS-1

PART NO.	DESCRIPTION	WEIGHT (LBS.)	LIST PRICE
HS-2	Set of 3 studs, washers and nuts for use with A2-SR siphonic roof drains (5/16" x 2-3/4")	.75	$ 23.50

Find this part in MIFAB literature by this component icon: HS-2

PART NO.	DESCRIPTION	WEIGHT (LBS.)	LIST PRICE
HS-3	Set of 3 studs, 9 washers and nuts for assembling deck clamps (-U) and/or extensions (-E)(5/16" x 10")	1.50	$ 40.00

Find this part in MIFAB literature by this component icon: HS-3

PART NO.	DESCRIPTION	WEIGHT (LBS.)	LIST PRICE
HS-4	Set of 3 hex head bolts for assembling (A2-V2) fixed extension to A2 body (5/16" x 2")	.50	$ 25.50
HS-5	Set of 3 hex head bolts for assembling (A2-V3) fixed extension to A2 body (5/16" x 3")	.75	$ 33.00

HS-4

HS-5

PART NO.	DESCRIPTION	WEIGHT (Lbs.)	LIST PRICE
HS-6	Set of 3 hex head bolts for assembling A2-V4 fixed extension to A2 body (5/16" x 4")	1.25	$ 33.00

HS-6

PART NO.	DESCRIPTION	WEIGHT (Lbs.)	LIST PRICE
HS-7	Set of 4 studs, washers and nuts for assembling A7-C3 membrane clamp to top of A7 body (5/16" x 2-3/4")	.50	$ 26.50
HS-8	Set of 4 studs, 12 washers and nuts for assembling deck clamps (-U) and/or extensions (-E) to the underside of the A7 body (5/16" x 10")	1.00	$ 42.00

HS-7

HS-8

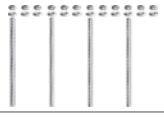

PARTS

PARTS

HS-9

PART NO.	DESCRIPTION	WEIGHT (Lbs.)	LIST PRICE
HS-9	Set of 4 studs, nuts & washers for the R1810 universal membrane clamp when retrofitting to Zurn, Smith, Wade, Josam roof drains* (3/8" x 2-3/4") * Use HS-2 for Watts or when installing on MIFAB R1200 Series Roof Drains (5/16" x 2-3/4")	.50	$ 28.50

HS-6

PART NO.	DESCRIPTION	WEIGHT (LBS.)	LIST PRICE
HS-10	Set of 3 hex head bolts for assembling A7-V2 fixed extension to A7 body.	.50	$ 25.50
HS-11	Set of 3 hex head bolts for assembling A7-V3 fixed extension to A7 body.	.75	$ 33.00
HS-12	Set of 3 hex head bolts for assembling A7-V4 fixed extension to A7 body.	1.25	$ 33.00

PART NO.	DESCRIPTION	WEIGHT (Lbs.)	LIST PRICE
HS-20	Set of 3 brackets and hardware for assembling the A2-BP bearing pan to the underside of the A2 body (5/16" x 3/4") (Shipped Standard with all A2-BP)	.50	$ 18.00

EXTENSIONS

Find this part in MIFAB literature by this component icon:

DD-50

PART NO.	DESCRIPTION	WEIGHT (Lbs.)	LIST PRICE
DD-50	Cast iron extension for all floor drains with adjustable top assemblies which thread into A1 bodies	2.25	$ 185.00

Find this part in MIFAB literature by this component icon:

A2-V(*)

PART NO.	DESCRIPTION	WEIGHT (Lbs.)	LIST PRICE
A2-V2	2" Cast iron fixed extension for A2 body with gasket and hardware	8.00	$ 860.00
A2-V3	3" Cast iron fixed extension for A2 body with gasket and hardware	10.00	$ 860.00
A2-V4	4" Cast iron fixed extension for A2 body with gasket and hardware	12.50	$ 860.00

(*) DENOTES EXTENSION HEIGHT (IN)

A2-H

Find this part in MIFAB literature by this component icon:

A2-XY

PART NO.	DESCRIPTION	WEIGHT (Lbs.)	LIST PRICE
A2-XY	Cast iron adjustable extension for all drains using A2 bodies. Extension range is from 3 3/4" to 5 5/8".	15.00	$ 428.00
A2-H	Cast iron adjustable extension for all drains using A2 bodies. Extension range is from 3 3/4" to 5 5/8".	15.00	$ 1027.00

SPACERS

The SPR spacer ring can be used to adjust the height of the strainer to match any discrepancies in finished floor grade. Any number of rings can be aded together. Each ring adds 3/8" of height.

PART NO.	DESCRIPTION	WEIGHT (Lbs.)	LIST PRICE
SPR-5-1	5" Dia. x 3/8" Nickel Bronze	.75	$ 313.00
SPR-5-3	5" Dia. x 3/8" Stainless Steel	.75	$ 313.00
SPR-6-1	6" Dia. x 3/8" Nickel Bronze	1.00	$ 313.00
SPR-6-3	6" Dia. x 3/8" Stainless Steel	1.00	$ 313.00

Note: See page 51 for hardware required

STANDARD REINFORCED ROUND STRAINER (NICKEL BRONZE OR STAINLESS STEEL)

See page 50 & 51 for the complete range of strainer variations and materials

Find this part in MIFAB literature by this component icon:

(*)-1 or 3

PART NO.	DESCRIPTION	WEIGHT (Lbs.)	LIST PRICE
5-(1,3)	5" Dia. NB or SS*	1.25	$ 377.00
6-(1,3)	6" Dia. NB or SS*	1.75	$ 516.00
7-(1,3)	7" Dia. NB or SS*	2.50	$ 632.00
8-(1,3)	8" Dia. NB or SS*	4.00	$ 855.00
10-(1,3)	10" Dia. NB or SS*	8.50	$ 1324.00

(*) DENOTES STRAINER DIAMETER

* Heavy Duty Load Rated Stainless Steel at the same price as light duty nickel bronze!

STANDARD REINFORCED SQUARE STRAINER (NICKEL BRONZE OR STAINLESS STEEL)

See page 50 & 51 for the complete range of strainer variations and materials

Find this part in MIFAB literature by this component icon:

S(*)-1 or 3

PART NO.	DESCRIPTION	WEIGHT (Lbs.)	LIST PRICE
S5-(1,3)	5" x 5" NB or SS*	2.00	$ 586.00
S6-(1,3)	6" x 6" NB or SS*	3.00	$ 682.00
S8-(1,3)	8" x 8" NB or SS*	7.00	$ 1103.00
S10-(1,3)	10" x 10" NB or SS*	12.00	$ 1917.00

(*) DENOTES STRAINER SIZE

* Heavy Duty Load Rated Stainless Steel at the same price as light duty nickel bronze!

DUCTILE IRON, ROUND, HEAVY DUTY STRAINER

See page 50 & 51 for the complete range of strainer variations and materials

Find this part in MIFAB literature by this component icon:

X5-4

PART NO.	DESCRIPTION	WEIGHT (Lbs.)	LIST PRICE
X5-4	5" Dia. Ductile Iron	2.00	$ 300.00

Design and dimensions are subject to modification. Prices do not include applicable taxes. Visit **www.mifab.com** for the most recent product information.
MIFAB®, Inc., 1321 West 119th Street, Chicago, Illinois 60643-5109, USA Toll Free: 1-800-465-2736 • Fax: 1-773-341-3049
All sales subject to MIFAB's® Terms & Warranties. Please refer to inside front cover. sales@mifab.com • Canada Toll Free: 1-800-387-3880

EF 4" ROUND FUNNEL STRAINER

PART NO.	DESCRIPTION	WEIGHT (Lbs.)	LIST PRICE
EF-(1,3)	4" Round funnel strainer in NB or SS	3.25	$ 960.00
EF-50	4" Round funnel strainer in Cast Iron	3.50	$ 546.00

Find this part in MIFAB literature by this component icon: EF FUNNEL

F FUNNELS ONLY

PART NO.	DESCRIPTION	WEIGHT (Lbs.)	LIST PRICE
F4-(1,3)	4" Round NB or SS funnel only	1.50	$ 583.00
F4-50	4" Round cast iron funnel only	1.75	$ 247.00

NOTE: Includes 1 of H-1083 1/4-20 x 3/4 Hex head cap screw to assemble funnel to strainer and H-1081 Washer

Find this part in MIFAB literature by this component icon: F FUNNEL

EG 4" x 9" ELONGATED FUNNEL STRAINER

PART NO.	DESCRIPTION	WEIGHT (Lbs.)	LIST PRICE
EG-(1,3)	9" Oval funnel strainer in NB or SS	4.25	$1581.00
EG-50	9" Oval funnel strainer in Cast Iron	5.25	$ 882.00

Find this part in MIFAB literature by this component icon: EG FUNNEL

G FUNNELS ONLY

PART NO.	DESCRIPTION	WEIGHT (Lbs.)	LIST PRICE
G-(1,3)	9" NB or SS oval funnel only	2.50	$1204.00
G-50	9" Cast Iron oval funnel only	3.50	$ 583.00

NOTE: Includes 1 of H-1083 1/4-20 x 3/4 Hex head cap screw to assemble funnel to strainer and H-1081 Washer

Find this part in MIFAB literature by this component icon: G FUNNEL

STAINLESS STEEL DOME FOR OVERFLOW AND PLANTING AREA DRAINS

PART NO.	DESCRIPTION	WEIGHT (Lbs.)	LIST PRICE
F1830-PD-3	Cast Type 304 Stainless steel dome	2.50	$ 495.00

(F1830-PD-3)

REPLACEMENT STRAINER GRATES, SECURING HARDWARE & SPECIAL TOOLS

PART NO.	DESCRIPTION	GRATE DIMENSION	WEIGHT (Lbs.)	LIST PRICE
4PG-1	4" Dia. NB Grate with securing screws	3.86" DIA	.35	$ 285.00
5PG-(1,3)	5" Dia. NB or SS Grate with securing screws	4.86" DIA	.50	$ 285.00
5PG-4	5" Dia. Ductile Iron Grate with securing screws	4.86" DIA	.75	$ 220.00
6PG-(1,3)	6" Dia. NB or SS Grate with securing screws	5.42" DIA	.75	$ 390.00
7PG-(1,3)	7" Dia. NB or SS Grate with securing screws	6.61" DIA	1.00	$ 481.00
8PG-(1,3)	8" Dia. NB or SS Grate with securing screws	7.13" DIA	1.50	$ 649.00
10PG-(1,3)	10" Dia. NB or SS Grate with securing screws	9.72" DIA	1.90	$1,067.00
S5PG-(1,3)	5" Sq. NB or SS Grate with securing screws	4.50" SQ	.75	$ 448.00
S6PG-(1,3)	6" Sq. NB or SS Grate with securing screws	5.47" SQ	1.00	$ 521.00
S8PG-(1,3)	8" Sq. NB or SS Grate with securing screws	7.44" SQ	1.75	$ 833.00
S10PG-(1,3)	10" Sq. NB or SS Grate with securing screws	9.15" SQ	2.25	$1,418.00
PART NO.	**DESCRIPTION**	**GRATE DIMENSION**	**WEIGHT (Lbs.)**	**LIST PRICE**
X5PG-1	5" Dia. 1/2" thick NB Grate with securing screws	4.86" DIA	.75	$ 490.00
X6PG-1	6" Dia. 1/2" thick NB Grate with securing screws	5.42" DIA	1.00	$ 595.00
X8PG-1	8" Dia. 1/2" thick NB Grate with securing screws	7.13" DIA	2.00	$ 856.00
XS5PG-1	5" Sq. 1/2" thick NB Grate with securing screws	4.50" SQ	1.00	$ 551.00
XS6PG-1	6" Sq. 1/2" thick NB Grate with securing screws	5.47" SQ	1.50	$ 679.00
XS8PG-1	8" Sq. 1/2" thick NB Grate with securing screws	7.44" SQ	2.50	$1027.00

STRAINER HARDWARE

PART NO.	DESCRIPTION	WEIGHT (Lbs.)	LIST PRICE
H-1010	Standard SS Allen Head screws (3) (Order 2 packs of 3 for Sq. strainers) (10-24 x 3/8" SS flat allen key)	.10	$ 29.50
H-1039A	SS Vandal Proof screws (TR25 Torx and Pin, 10-24 x 3/8")	.10	$ 74.00
H-1032A	SS Veneer securing screws (4) Torx/Pin Drive Key (for H-1039A)	.10	$ 76.00
H-1083	Adj. top assembly & extension set screws (3) for A2 body (1/4-20 x 3/4" Hex head cap screw)	.10	$ 29.50
H-1033	Snake eye screw tool	1.00	$154.00
H-1032A	(Tr25 Torx and Pin) Tamper proof Torx Screw	1.00	$154.00
H-1042	driver "T" Strainer cover removal tool	1.00	$183.00

NOTE ON REPLACEMENT GRATE FINISHES:

add to the LIST PRICE of replacement grate

SUFFIX	DESCRIPTION	
-2	Polished Brass	$ 59.00
-49	Polished Chrome Plated NB	$ 59.00

A8 BODY PARTS

SUFFIX	DESCRIPTION	LIST PRICE
A8-PDA	Cast iron dome, hardware and membrane clamp	$ 768.00
A8-UDC	Underdeck clamp (2 pieces) for A8 bodies	$ 319.00
A8-BP	Sump receiver for A8 bodies	$ 356.00
A8-MD	Cast iron dome only	$ 448.00

PARTS AREA DRAIN TOP ASSEMBLIES PARTS

Find this part in MIFAB literature by this component icon: F1300-TA-(*)

PART NO.	DESCRIPTION	WEIGHT (Lbs.)	LIST PRICE
F1300-TA-(1,3)	7" round NB or SS top assembly	8.50	$ 871.00
F1300-TA-4	7" round ductile iron top assembly	7.00	$ 453.00
F1300-PG-(1,3)	7" round NB or SS Grate Only	4.50	$ 630.00
F1300-PG-4	7" round ductile iron Grate Only (6.42" DIA)	3.00	$ 335.00

(*) DENOTES TOP ASSEMBLY FINISH

Find this part in MIFAB literature by this component icon: F1320-TA-(*)

PART NO.	DESCRIPTION	WEIGHT (Lbs.)	LIST PRICE
F1320-TA-(1,3)	9" round DI top assembly w/NB or SS Veneer	12.00	$ 1,353.00
F1320-TA-4	9" round ductile iron top assembly	10.50	$ 622.00
F1320-PG-(1,3)	9" round DI Grate Only w/NB or SS Veneer	6.50	$ 1,017.00
F1320-PG-4	9" round ductile iron Grate Only (8.07" DIA)	5.00	$ 466.00
F1320-TA-4-Z	9" round ductile iron top assembly with Z flange	15.00	$ 2,346.00

(*) DENOTES TOP ASSEMBLY FINISH

Find this part in MIFAB literature by this component icon: F1340-TA-(*)

PART NO.	DESCRIPTION	WEIGHT (Lbs.)	LIST PRICE
F1340-TA-(1,3)	12" round DI top assembly w/NB or SS Veneer	28.00	$ 2,220.00
F1340-TA-4	12" round ductile iron top assembly	26.00	$ 1,249.00
F1340-PG-(1,3)	12" round DI Grate Only w/NB or SS Veneer	16.00	$ 1,665.00
F1340-PG-4	12" round ductile iron Grate Only (11.94" DIA)	14.00	$ 940.00

(*) DENOTES TOP ASSEMBLY FINISH

Find this part in MIFAB literature by this component icon: F1360-TA-(*)

PART NO.	DESCRIPTION	WEIGHT (Lbs.)	LIST PRICE
F1360-TA-(1,3)	15" round DI top assembly w/NB or SS Veneer	41.00	$ 5,117.00
F1360-TA-4	15" round ductile iron top assembly	38.00	$ 3,315.00
F1360-PG-(1,3)	15" round DI Grate Only w/NB or SS Veneer	23.00	$ 3,650.00
F1360-PG-4	15" round ductile iron Grate Only (14.96" DIA)	20.00	$ 2,049.00

(*) DENOTES TOP ASSEMBLY FINISH

Find this part in MIFAB literature by this component icon: F1420-TA-(*)

PART NO.	DESCRIPTION	WEIGHT (Lbs.)	LIST PRICE
F1420-TA-(1,3)	8" Sq. DI top assembly w/NB or SS Veneer	10.00	$ 2,106.00
F1420-TA-4	8" Sq. ductile iron top assembly	8.50	$ 1,350.00
F1420-PG-(1,3)	8" Sq. DI Grate Only w/NB or SS Veneer	5.00	$ 1,396.00
F1420-PG-4	8" Sq. ductile iron Grate Only (7.09" SQ)	3.50	$ 842.00

(*) DENOTES TOP ASSEMBLY FINISH

Find this part in MIFAB literature by this component icon: F1440-TA-(*)

PART NO.	DESCRIPTION	WEIGHT (Lbs.)	LIST PRICE
F1440-TA-(1,3)	12" Sq. DI top assembly w/NB or SS Veneer	37.50	$ 2,652.00
F1440-TA-4	12" Sq. ductile iron top assembly	35.50	$ 1,520.00
F1440-PG-(1,3)	12" Sq. DI Grate Only w/NB or SS Veneer	21.00	$ 1,992.00
F1440-PG-4	12" Sq. ductile iron Grate Only (12.00" SQ)	19.00	$ 1,144.00

(*) DENOTES TOP ASSEMBLY FINISH

Find this part in MIFAB literature by this component icon: F1460-TA-(*)

PART NO.	DESCRIPTION	WEIGHT (Lbs.)	LIST PRICE
F1460-TA-(1,3)	15 3/4" Sq. DI top assembly w/NB or SS Veneer	54.00	$ 5,053.00
F1460-TA-4	15 3/4" Sq. ductile iron top assembly	51.00	$ 2,694.00
F1460-PG-(1,3)	15 3/4" Sq. DI Grate Only w/NB or SS Veneer	30.50	$ 3,845.00
F1460-PG-4	15 3/4" Sq. ductile iron Grate Only (15.00" SQ)	27.50	$ 2,073.00

(*) DENOTES TOP ASSEMBLY FINISH

SEDIMENT BUCKETS

A1-MB

A1-PB

A1-SSB

Find this part in MIFAB literature by this component icon: A1-(*)B

(*) DENOTES BUCKET MATERIAL

PART NO.	DESCRIPTION	WEIGHT (Lbs.)	LIST PRICE
A1-PB	Plastic Sediment Bucket for all F1100 Series Floor Drains	.10	$ 144.00
A1-MB	Cast iron Sediment Bucket for F1300, F1320,F1330C, F1420 and F1430C top assemblies ($100.00 for -11 & -13)	1.50	$ 185.00
A1-MB-83	Cast iron Sediment Bucket for F1300, F1320, F1330C, F1420 and F1430C top assemblies with stainless steel mesh screen	1.75	$ 727.00
A1-SSB	Stainless Steel Sediment Bucket for all F1100 Series Floor Drains	.75	$ 423.00

Find this part in MIFAB literature by this component icon: A2-MB

PART NO.	DESCRIPTION	WEIGHT (Lbs.)	LIST PRICE
A2-MB	Cast Iron Sediment Bucket for all area drain top assemblies that fit the A2 Body* ($100 for -11 and -13) *Except "TFB" area drains, see below	4.00	$ 357.00
A2-MB-83	Cast Iron Sediment Bucket w/SS mesh screen	4.50	$ 901.00

F1320-TFB-MB

PART NO.	DESCRIPTION	LIST PRICE
F1320-TFB-MB	Cast Iron Sediment Bucket for F1320-TFB	$ 301.00
F1340-TFB-MB	Cast Iron Sediment Bucket for F1340-TFB	$ 385.00

PART NO.	DESCRIPTION	LIST PRICE
F1320-TA-4-TFB	Top assembly for F1320-TFB	$ 671.00
F1340-TA-4-TFB	9" Dia. true fit area drain. (-1, -3) (8.07" DIA)	$ 1,360.00
	Top assembly for F1340-TFB	$ 1,534.00
	12" Dia. true fit area drain. (-1, -3) (11.94" DIA)	$ 2,471.00

Design and dimensions are subject to modification. Prices do not include applicable taxes. Visit **www.mifab.com** for the most recent product information.
MIFAB®, Inc., 1321 West 119th Street, Chicago, Illinois 60643-5109, USA Toll Free: 1-800-465-2736 • Fax: 1-773-341-3049
All sales subject to MIFAB's® Terms & Warranties. Please refer to inside front cover. sales@mifab.com • Canada Toll Free: 1-800-387-3880

FLOOR SINK GRATES

PART NO.	DESCRIPTION	WEIGHT (LBS.)	LIST PRICE
FS1500-PG	8" x 8" A.R.E. coated cast iron floor sink full grate (7.68" SQ)	3.75	$ 257.00
FS1500-PG-150	8" x 8" A.R.E. coated cast iron floor sink half grate (7.68" SQ)	2.75	$ 257.00
FS1500-PG-175	8" x 8" A.R.E. coated cast iron floor sink three quarter grate *Grate size is nominal to fit body (7.68" SQ)	3.50	$ 257.00

PART NO.	DESCRIPTION	WEIGHT (LBS.)	LIST PRICE	(-PG) grate only	(-PF) frame only
FS1500-TA-(1,3)	8" x 8" NB or SS floor sink full frame & grate* (8.09" SQ)	4.75	$ 948.00	$ 400.00	$ 548.00
FS1500-TA-150-(1,3)	8" x 8" NB or SS floor sink full frame & half grate* (8.09" SQ)	4.00	$ 948.00	$ 400.00	$ 548.00
FS1500-TA-175-(1,3)	8" x 8" NB or SS full frame & three quarter grate* (8.09" SQ) *Add **$463.00** for -9 Hinged grate to above prices in SS *Grate size is nominal to fit body	3.75	$ 948.00	$ 400.00	$ 548.00

PART NO.	DESCRIPTION	WEIGHT (LBS.)	LIST PRICE
FS1530-PG	4" x 8" A.R.E. coated cast iron floor sink full grate (6.9" x 2.86")	1.25	$ 198.00
FS1530-PG-150	4" x 8" A.R.E. coated cast iron floor sink half grate (6.9" x 2.86")	1.00	$ 198.00
FS1530-PG-175	4" x 8" A.R.E. coated cast iron floor sink three quarter grate *Grate size is nominal to fit body (6.9" x 2.86")	1.10	$ 198.00

PART NO.	DESCRIPTION	WEIGHT (LBS.)	LIST PRICE	(-PG) grate only	(-PF) frame only
FS1530-TA-(1,3)	4" x 8" NB or SS floor sink full frame & grate* (3.56" x 7.44")	3.50	$ 644.00	$ 400.00	$ 244.00
FS1530-TA-150-(1,3)	4" x 8" NB or SS floor sink full frame & half grate* (3.56" x 7.44")	3.00	$ 644.00	$ 400.00	$ 244.00
FS1530-TA-175-(1,3)	4" x 8" NB or SS full frame & three quarter grate* (3.56" x 7.44") *Grate size is nominal to fit body	2.75	$ 644.00	$ 400.00	$ 244.00

PART NO.	DESCRIPTION	WEIGHT (LBS.)	LIST PRICE
FS1700-PG	12" x 12" A.R.E. coated cast iron floor sink full grate (9.31" SQ)	6.75	$ 301.00
FS1700-PG-150	12" x 12" A.R.E. coated cast iron floor sink half grate (9.31" SQ)	5.50	$ 301.00
FS1700-PG-175	12" x 12" A.R.E. coated cast iron floor sink three quarter grate (9.31" SQ) *Grate size is nominal to fit body	6.25	$ 301.00

PART NO.	DESCRIPTION	WEIGHT (LBS.)	LIST PRICE	(-PG) grate only	(-PF) frame only
FS1700-TA-(1,3)	12" x 12" NB or SS floor sink full frame & grate* (11.86" SQ)	8.50	$ 1281.00	$ 645.00	$ 636.00
FS1700-TA-150-(1,3)	12" x 12" NB or SS floor sink full frame & half grate* (11.86" SQ)	6.75	$ 1281.00	$ 645.00	$ 636.00
FS1700-TA-175-(1,3)	12" x 12" NB or SS full frame & three quarter grate* (11.86" SQ) *Add **$463.00** for -9 Hinged grate to above prices in SS *Grate size is nominal to fit body	7.50	$ 1281.00	$ 645.00	$ 636.00

PART NO.	DESCRIPTION	WEIGHT (LBS.)	LIST PRICE
FS1750-PG	8" Round A.R.E. coated cast iron floor sink full grate (6.98" DIA)	2.75	$ 257.00
FS1750-PG-150	8" Round A.R.E. coated cast iron floor sink half grate (6.98" DIA)	2.25	$ 257.00
FS1750-PG-175	8" Round A.R.E. coated cast iron floor sink three quarter grate (6.98" DIA) *Grate size is nominal to fit body	2.50	$ 257.00

PART NO.	DESCRIPTION	WEIGHT (LBS.)	LIST PRICE	(-PG) grate only	(-PF) frame only
FS1750-TA-(1,3)	8" Round NB or SS floor sink full frame & grate* (7.70" DIA)	4.50	$ 850.00	$ 279.00	$ 571.00
FS1750-TA-150-(1,3)	8" Round NB or SS floor sink full frame & half grate* (7.70" DIA)	3.75	$ 850.00	$ 279.00	$ 571.00
FS1750-TA-175-(1,3)	8" Round NB or SS full frame & three quarter grate* (7.70" DIA) *Grate size is nominal to fit body	4.25	$ 850.00	$ 279.00	$ 571.00

PART NO.	DESCRIPTION	WEIGHT (LBS.)	LIST PRICE
FS1760-PG	12" Round A.R.E. coated cast iron floor sink full grate (10.37" DIA)	6.50	$ 353.00
FS1760-PG-150	12" Round A.R.E. coated cast iron floor sink half grate (10.37" DIA)	5.25	$ 353.00
FS1760-PG-175	12" Round A.R.E. coated cast iron floor sink three quarter grate (10.37" DIA) *Grate size is nominal to fit body	5.75	$ 353.00

PART NO.	DESCRIPTION	WEIGHT (LBS.)	LIST PRICE	(-PG) grate only	(-PF) frame only
FS1760-TA-(1,3)	12" Round NB or SS floor sink full frame & grate* (12.10" DIA)	8.00	$ 1659.00	$ 672.00	$ 987.00
FS1760-TA-150-(1,3)	12" Round NB or SS floor sink full frame & half grate* (12.10" DIA)	6.50	$ 1659.00	$ 672.00	$ 987.00
FS1760-TA-175-(1,3)	12" Round NB or SS full frame & three quarter grate*(12.10" DIA) *Grate size is nominal to fit body	7.75	$ 1659.00	$ 672.00	$ 987.00

PART NO.	DESCRIPTION	WEIGHT (LBS.)	LIST PRICE
FS1500-PD	Aluminum Dome Strainer (for all cast iron floor sinks)	.50	$ 78.00
FS1500-PD-3	Stainless Steel Dome Strainer (for all SS floor sinks)	1.25	$ 539.00
FD-9602	2" Stainless Steel Snap in Secondary Strainer	.10	$ 78.00
FD-9603	3" Stainless Steel Snap in Secondary Strainer	.15	$ 78.00
FD-9604	4" Stainless Steel Snap in Secondary Strainer	.25	$ 78.00

FS1500-PD FD-9600

PARTS

FLOOR SINK PARTS

A.R.E. COATED CAST IRON FLOOR SINK BODIES

Floor sink body list prices are with the standard No Hub outlet connection. See outlet optional variations below floor sink body listing for prices and suffixes.

PART NO.	DESCRIPTION	WEIGHT (LBS.)	LIST PRICE
FS1522,3,4-PB	8" x 8" x 6" deep floor sink body, 2", 3", 4" no hub connection	12.50	$ 1,813.00
FS1522,3,4-FL-PB	8" x 8" x 6" deep floor sink body, w/anchor flange, 2", 3", 4" no hub conn.	21.00	$ 2,058.00
FS1532,3,4-PB	8" x 4" x 4" deep floor sink body, 2", 3", 4" no hub connection	11.00	$ 1,938.00
FS1532,3,4-FL-PB	8" x 4" x 4" deep floor sink body, w/anchor flange, 2", 3", 4" no hub conn.	21.00	$ 2,195.00
FS1722,3,4-PB	12" x 12" x 6" deep floor sink body, 2", 3", 4" no hub connection	21.00	$ 2,471.00
FS1722,3,4-FL-PB	12" x 12" x 6" deep floor sink body, w/anchor flange, 2", 3",4" no hub conn.	35.00	$ 2,980.00
FS1732,3,4-PB	12" x 12" x 8" deep floor sink body, 2", 3", 4" no hub connection	24.00	$ 2,617.00
FS1732,3,4-FL-PB	12" x 12" x 8" deep floor sink body, w/anchor flange, 2", 3",4" no hub conn.	36.00	$ 3,126.00
FS1742,3,4-PB	12" x 12" x 10" deep floor sink body, 2", 3", 4" no hub connection	26.00	$ 2,783.00
FS1742,3,4-FL-PB	12" x 12" x 10" deep floor sink body, w/anchor flange,2",3",4" no hub conn.	38.00	$ 3,292.00
FS1752,3,4-PB	8" round x 6" deep floor sink body, 2", 3", 4" no hub connection	13.00	$ 1,432.00
FS1752,3,4-FL-PB	8" round x 6" deep floor sink body, w/anchor flange, 2", 3",4" no hub conn.	23.00	$ 1,811.00
FS1762,3,4-PB	12" round x 8" deep floor sink body, 2", 3", 4" no hub connection	22.00	$ 1,898.00
FS1762,3,4-FL-PB	12" round x 8" deep floor sink body, w/anchor flange, 2",3",4" no hub conn.	31.00	$ 2,398.00
FS1772,3,4-PB	16" x 16" x 9" deep floor sink body, 2", 3", 4" no hub connection	55.00	$ 5,165.00
FS1772,3,4-FL-PB	16" x 16" x 9" deep floor sink body, w/anchor flange,2",3",4" no hub conn.	60.00	$ 5,650.00
FS1792,3,4-PB	24" x 16" x 17" deep floor sink body, 2", 3", 4" no hub connection	200.00	$11,208.00

NOTE: Transition floor sink bodies are available at the same price as the standard floor sink body pricing above. Transition floor sink bodies use the A3-PG gasket and the appropriate A1 body to attain the outlet connection size and type required. See the floor sink section of the www.mifab.com website for specification sheets on MIFAB's transition floor sink bodies. **See page 96** for transition floor sink body heights.

STAINLESS STEEL (TYPE 304) FLOOR SINK BODIES

PART NO.	DESCRIPTION	WEIGHT (LBS.)	LIST PRICE
FS1912,3,4-FL-PB	12" x 12" x 4" deep floor sink body w/anchor flange, 2", 3", 4" no hub conn.	15.00	$ 4,325.00
FS1922,3,4-FL-PB	12" x 12" x 6" deep floor sink body, w/anchor flange, 2", 3",4" no hub conn.	17.00	$ 4,410.00
FS1932,3,4-FL-PB	12" x 12" x 8" deep floor sink body, w/anchor flange, 2", 3",4" no hub conn.	19.00	$ 4,475.00
FS1942,3,4-FL-PB	12" x 12" x 10" deep floor sink body, w/anchor flange,2",3",4" no hub conn.	21.00	$ 4,935.00

OUTLET OPTIONAL VARIATIONS (for cast iron and stainless steel floor sink bodies)

add to No Hub LIST PRICE	OUTLET CONNECTION	(SUFFIX) add after outlet size	WEIGHT (LBS.)	
	Push on outlet (2", 3", 4")	P	1.00	No Add
	Threaded outlet (2", 3", 4")	T	1.00	$ 107.00
	Inside caulk outlet (2", 3", 4")	X	1.50	No Add
	PVC socket outlet w/A.R.E. body	-30	-	No Add
	ABS socket outlet w/A.R.E. body	-31	-	No Add

FS1700-PB-3

To specify a stainless steel sediment bucket, add **suffix-69** to the floor sink model number.

PART NO.	DESCRIPTION	WEIGHT (LBS.)	LIST PRICE
FS1500-PB-3	S.S Sediment Bucket for 8" x 8" floor sinks	2.00	$ 570.00
FS1700-PB-3	S.S Sediment Bucket for 12" x 12" floor sinks	4.00	$ 785.00
FS1750-PB-3	S.S Sediment Bucket for 8" round floor sinks	2.00	$ 709.00
FS1760-PB-3	S.S Sediment Bucket for 12" round floor sinks	4.00	$ 622.00

* Add for S.S. mesh screen over bucket (Suffix -83) and **$622.00** to all the above S.S. sediment buckets. Combined suffix is -69-83.

FS1750-PB

FS1500-PB

PART NO.	DESCRIPTION	WEIGHT (LBS.)	LIST PRICE
FS1500-PB	Plastic Sediment Bucket for 8" x 8" floor sinks	1.00	$ 264.00
FS1700-PB	Plastic Sediment Bucket for 12" x 12" floor sinks	1.50	$ 419.00
FS1750-PB	Plastic Sediment Bucket for 8" round floor sinks	1.00	$ 301.00
FS1760-PB	Plastic Sediment Bucket for 12" round floor sinks The -5 suffix is for the standard plastic sediment bucket.	1.50	$ 419.00

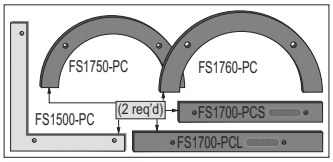

FS1530-PC

PART NO.	DESCRIPTION	WEIGHT (LBS.)	LIST PRICE
FS1500-PC	Membrane clamps (2) for 8" x 8" floor sinks w/ 6 H-1083 screws	4.00	$ 202.00
FS1530-PC	Membrane Clamps (2) for 8" x 4" floor sinks w / 4 H-1083 screws	3.00	$ 243.00
FS1700-PCS & FS1700-PCL	Short and long membrane clamps (2 each) for 12" x 12" floor sinks w 8 H-1083 screws	6.00	$ 254.00
FS1750-PC	Membrane clamps (2) for 8" round floor sinks w/ 4 H-1083 screws	5.00	$ 243.00
FS1760-PC	Membrane clamps (2) for 12" round floor sinks w/ 4 H-1083 screws	8.00	$ 239.00
FS1900-PCS & FS1900-PCL	Short and long membrane clamps (2 each) for 12" x 12" stainless steel floor sinks w 8 H-1083 screws H-1083 = 1/4-20 x 3/4" hex head plated cap screws	6.00	$ 254.00

Design and dimensions are subject to modification. Prices do not include applicable taxes. Visit **www.mifab.com** for the most recent product information.
MIFAB®, Inc., 1321 West 119th Street, Chicago, Illinois 60643-5109, USA Toll Free: 1-800-465-2736 • Fax: 1-773-341-3049
All sales subject to MIFAB's® Terms & Warranties. Please refer to inside front cover. sales@mifab.com • Canada Toll Free: 1-800-387-3880

ROOF DRAIN PARTS

PART NO.	DESCRIPTION	WEIGHT (LBS.)	LIST PRICE
W-31	4" Dia. x 5" high ABS solid standpipe for R1200-W	1.00	$ 255.00
W-31-PERF	4" Dia. x 5" perforated standpipe for F1830-P, PL	.80	$ 317.00
W6-31	6" Dia. x 5" high ABS solid standpipe for R1200-W6	1.50	$ 317.00

Find this part in MIFAB literature by this component icon: W-31

PART NO.	DESCRIPTION	WEIGHT (LBS.)	LIST PRICE
A2-BG	R1200-G, 6" high S.S. ballast gaurd	3.00	$1,022.00
A2-BG8	R1200-G, 8" high S.S. ballast gaurd	4.00	$ 1181.00
A5-BG	R1220-G, 5" high S.S. ballast guard	3.50	$ 816.00

Find this part in MIFAB literature by this component icon: A2-BG

PART NO.	DESCRIPTION	WEIGHT (LBS.)	LIST PRICE
A1-PD	Poly dome (R1100)	.75	$ 345.00
A1-MD	Metal dome (R1100)	1.00	$ 468.00
A1-MD-81	Bronze dome (R1100)	1.50	$ 927.00
A1-SSD	SS Mesh over metal dome (R1100)	1.25	$ 927.00

Find this part in MIFAB literature by this component icon:

A1-PD

A1-MD

PART NO.	DESCRIPTION	WEIGHT (LBS.)	LIST PRICE
A1-BP	Sump Receiver (12" x 12")	2.25	$ 337.00
R1150-BP	Loose Set Sump Receiver for R1150 (12" x 24") combination Roof Drain.	5.20	$ 605.00
A1-BP-90	Sump receiver for R1100 side outlet roof drains		$ 596.00

Find this part in MIFAB literature by this component icon: A1-BP

PART NO.	DESCRIPTION	WEIGHT (LBS.)	LIST PRICE
A1-BG	6" high SS ballast guard	2.00	$ 604.00

Find this part in MIFAB literature by this component icon: A1-BG

PART NO.	DESCRIPTION	WEIGHT (LBS.)	LIST PRICE
A1-F1	One slot weir for R1100 (5 GPM Max)	3.25	$ 565.00
A1-F2	Two slot weir for R1100 (10 GPM Max)	3.15	$ 565.00
A1-F3	Three slot weir for R1100 (15 GPM Max)	3.00	$ 565.00

Find this part in MIFAB literature by this component icon: A1-F(*)

(*) DENOTES NUMBER OF WEIR SLOTS

PART NO.	DESCRIPTION	WEIGHT (LBS.)	LIST PRICE
A1-C3	Membrane Clamp and dome receiver w/ integral gravel stop, adjustable extension ring and/or underdeck clamp for all drains using A1 bodies	2.00	$ 196.00
A1-C3-CO	Underdeck clamp with cut out to install around A1-2T-90-7 and A1-3T-90-7 side outlet bodies	1.75	$ 196.00

Find this part in MIFAB literature by this component icon: A1-C3

* Use **HS-20** hardware pack for A1-4T-90-7 side outlet bodies for underdeck clamp.

PART NO.	DESCRIPTION	WEIGHT (LBS.)	LIST PRICE
A1-WD	Membrane Clamp and and dome receiver w/ integral water dam for all 8" diameter A1 bodies	3.50	$ 451.00

Find this part in MIFAB literature by this component icon: A1-WD

PART NO.	DESCRIPTION	WEIGHT (LBS.)	LIST PRICE
A2-PD	Poly dome (R1200)	1.75	$ 177.00
A2-MD	Cast Iron Dome (R1200)	9.00	$ 448.00
A2-MDL-80	Low Profile Aluminum dome (R1200)	5.75	$ 499.00
A2-MDL-81	Low Profile Bronze dome (R1200)	8.00	$ 1,515.00
A2-SSD	SS Mesh over A2-MDL-80 (R1200)	6.50	$ 1,103.00
A5-MD	Cast Iron Dome (R1220)	7.00	$ 290.00

Find this part in MIFAB literature by this component icon: A2-MD

A5-MD

A2-PD

PART NO.	DESCRIPTION	WEIGHT (LBS.)	LIST PRICE
A2-BP	Sump receiver (R1200)(24" x 24")	6.50	$ 356.00
A2-BP-90	Bearing pan for R1200-90 (24" x 24")	6.00	$ 708.00
A7-BP	Bearing pan for R1260 Roof Drains	7.00	$ 356.00
R1270-BP	Bearing pan for large combination Roof Drain	14.00	$ 980.00
A5-BP	Bearing pan for R1220 (24" x 24")	5.00	$ 337.00

ALL BEARING PANS MADE FROM GALVANIZED 18 GAUGE STEEL **(INCLUDES HS-20 HARDWARE PACK TO BOLT A2 BODY TO SUMP RECEIVER)**

(R1270-BP)

(A2-BP)

PART NO.	DESCRIPTION	WEIGHT (LBS.)	LIST PRICE
A2-F	Adjustable to one, two or three slots. (10, 20 or 30 GPM)	7.50	$ 1,738.00

Find this part in MIFAB literature by this component icon: A2-F

PARTS

CLEANOUT PARTS

Find this part in MIFAB literature by this component icon: **R-(*)**

PART NO.	DESCRIPTION	WEIGHT (Lbs.)	LIST PRICE
R-1	5” Round N.B. combined cover/plug	3.50	$ 999.00
R-3	5” Round heavy duty S.S. combined cover/plug (See bottom for replacement cover)	3.50	$ 999.00

(*) DENOTES COVER FINISH

Find this part in MIFAB literature by this component icon: **RC-1**

PART NO.	DESCRIPTION	WEIGHT (Lbs.)	LIST PRICE
RC-1	5” Round N.B. combined cover/plug with carpet marker	3.60	$1106.00
H-1019	Stainless Steel marker disc with screw (2” Dia.) (RCCO-1, replacement cover - **$863.00**)	.10	$ 106.00

Find this part in MIFAB literature by this component icon: **RFC(*)-(*)**

PART NO.	DESCRIPTION	WEIGHT (Lbs.)	LIST PRICE
RFC7-1,3	7” Round N.B. or S.S. combined cover/plug with finished floor level clamping flange (for Pirelli® type floor coverings)	6.00	$ 1038.00
RFC9-3	9” Round S.S. combined cover/plug with finished floor level clamping flange (for Pirelli® type floor coverings)	8.00	$ 1379.00

(*) DENOTES SIZE & FINISH

Find this part in MIFAB literature by this component icon: **S-(*)**

PART NO.	DESCRIPTION	WEIGHT (Lbs.)	LIST PRICE
S-1	5” Square N.B. combined cover/plug (SCO-1, 3 - replacement cover - **$761.00**)	5.50	$ 999.00
S-3	5” Square S.S. combined cover/plug	5.50	$ 999.00
6S-1	6” Square N.B. combined cover/plug (6SCO-1, 3 - replacement cover - **$1007.00**)	7.50	$ 1245.00
6S-3	6” Square S.S. combined cover/plug	7.50	$ 1245.00

(*) DENOTES COVER FINISH

Find this part in MIFAB literature by this component icon: **T-(*)**

PART NO.	DESCRIPTION	WEIGHT (Lbs.)	LIST PRICE
T-1	5” Round nickel bronze combined cover/plug with tile recess	3.75	$ 999.00
T-3	5” Round stainless steel combined cover/plug with tile recess (TCO-1, 3 - replacement cover - **$761.00**)	3.75	$ 999.00

(*) DENOTES COVER FINISH

Find this part in MIFAB literature by this component icon: **TS-(*)**

PART NO.	DESCRIPTION	WEIGHT (Lbs.)	LIST PRICE
TS-1	5” Square nickel bronze combined cover/plug with tile recess	5.00	$ 999.00
TS-3	5” Square stainless steel combined cover/plug with tile recess (TSCO-1, 3 - replacement cover - **$761.00**)	5.00	$ 999.00

(*) DENOTES COVER FINISH

Find this part in MIFAB literature by this component icon: **UR-(*)**

PART NO.	DESCRIPTION	WEIGHT (Lbs.)	LIST PRICE
UR-1	5” Round nickel bronze combined cover/plug with terrazzo recess	6.00	$ 1458.00
UR-3	5” Round stainless steel combined cover/plug with terrazzo recess (URCO-1, 3 - replacement cover - **$1218.00**)	6.00	$ 1458.00

(*) DENOTES COVER FINISH

Find this part in MIFAB literature by this component icon: **US-(*)**

PART NO.	DESCRIPTION	WEIGHT (Lbs.)	LIST PRICE
US-1	5” Square nickel bronze combined cover/plug with terrazzo recess	8.00	$ 1458.00
US-3	5” Square stainless steel combined cover/plug with terrazzo recess (USCO-1, 3 - replacement cover - **$1218.00**)	9.00	$ 1458.00

(*) DENOTES COVER FINISH

Find this part in MIFAB literature by this component icon: **XR-(*)**

PART NO.	DESCRIPTION	WEIGHT (Lbs.)	LIST PRICE
XR-1	5” Round heavy duty nickel bronze combined cover/plug	4.00	$ 1207.00
XR-4	5” Round heavy duty ductile iron combined cover/plug (see bottom for replacement cover)	5.00	$ 754.00

(*) DENOTES COVER FINISH

Find this part in MIFAB literature by this component icon: **XS-(*)**

PART NO.	DESCRIPTION	WEIGHT (Lbs.)	LIST PRICE
XS-1	5” Square heavy duty N.B. combined cover/plug	6.00	$ 1207.00
XS-3	5” Square heavy duty S.S. combined cover/plug (XSCO-1, 3 - replacement cover - **$949.00**)	6.00	$ 1207.00

(*) DENOTES COVER FINISH

REPLACEMENT CLEANOUT COVERS ONLY

PART NO.	DESCRIPTION	WEIGHT (Lbs.)	LIST PRICE
5CO-(1,3)	5” Replacement NB or SS cover only for R-1,3 w/ 3 securing screws (4.86” DIA)	1.50	$ 761.00
5CO-4	5” Replacement ductile iron cover for XR-4 w/ 3 securing screws (4.86” DIA)	2.50	$ 574.00
X5CO-1	5” Replacement 1/2” thick heavy duty NB cover only for XR-1 w/ 3 securing screws (4.86” DIA)	2.00	$ 791.00
H-1019	Replacement 2” Dia. SS carpet marker plate and screw (H-1019) for RC-(1,3)	.10	$ 106.00

Design and dimensions are subject to modification. Prices do not include applicable taxes. Visit **www.mifab.com** for the most recent product information.
MIFAB®, Inc., 1321 West 119th Street, Chicago, Illinois 60643-5109, USA Toll Free: 1-800-465-2736 • Fax: 1-773-341-3049
All sales subject to MIFAB's® Terms & Warranties. Please refer to inside front cover. sales@mifab.com • Canada Toll Free: 1-800-387-3880

CLEANOUT PARTS

PART NO.	DESCRIPTION	WEIGHT (LBS.)	LIST PRICE
C1226-TA-(1,3)	Heavy duty round SS or NB veneer cleanout top assembly for C1226 (cover and shank) (C1226-PS-50 = shank only), 8 1/4" Dia.	8.00	$ 1,354.00
C1226-TA-4	Heavy duty round ductile iron cleanout top assembly for C1226 (cover and shank) (C1226-PS-50 = shank only), 8 1/4" Dia.	9.00	$ 1,057.00

PART NO.	DESCRIPTION	WEIGHT (LBS.)	LIST PRICE
C1228-TA-(1,3)	Heavy duty round SS or NB veneer cleanout top assembly for C1228 (cover and shank) (C1228-PS-50 = shank only), 9 1/4" Dia.	11.00	$ 1,475.00
C1228-TA-4	Heavy duty round ductile iron cleanout top assembly for C1228 (cover and shank) (C1228-PS-50 = shank only), 9 1/4" Dia.	12.00	$ 1,218.00

PART NO.	DESCRIPTION	WEIGHT (LBS.)	LIST PRICE
C1226-PB-50*	6" no hub cast iron cleanout body w/ABS closure plug for C1226	12.00	$ 518.00
C1226X-PB-50*	6" inside calk cast iron cleanout body w/ABS closure plug for C1226	13.00	$ 518.00
C1228-PB-50*	8" no hub cast iron cleanout body w/ABS closure plug for C1228	14.00	$ 649.00
	* For brass plug, add suffix "-34B" and add $ 801.00		
C1226P-PB-50*	6" push on cast iron cleanout body w/ABS closure plug for C1226		$ 518.00

PART NO.	DESCRIPTION	WEIGHT (LBS.)	LIST PRICE
C1226-PP-31	ABS closure plug for C1226	1.00	$ 384.00
C1226-PP-81	Brass closure plug for C1226	3.00	$ 801.00
C1228-PP-31	ABS closure plug for C1228	1.00	$ 384.00
C1228-PP-81	Brass closure plug for C1228	4.00	$ 801.00

C1226-PP-31

PART NO.	DESCRIPTION	WEIGHT (LBS.)	LIST PRICE
CO-1	Cover Gasket for C1000, C1100, C1230 Series	.10	$ 54.00
CO-2	Test Seal "O" ring Gasket for C1000 & C1100 Series	.15	$ 54.00

CO-1 CO-2

PART NO.	DESCRIPTION	WEIGHT (LBS.)	LIST PRICE
C1441.5	1 1/2" "T-cone" style plastic closure plug w/ neoprene compression gasket	.40	$ 477.00
C1442	2" "T-cone" style plastic closure plug w/ neoprene compression gasket	.50	$ 477.00
C1443	3" "T-cone" style plastic closure plug w/ neoprene compression gasket	.75	$ 477.00
C1444	4" "T-cone" style plastic closure plug w/ neoprene compression gasket	1.00	$ 477.00

PART NO.	DESCRIPTION	WEIGHT (LBS.)	LIST PRICE
A4-34B	Threaded brass tapered closure plug that fits 2", 3", 4" A4 bodies	2.00	$ 255.00
A4-34P	Threaded plastic tapered closure plug that fits 2", 3", 4" A4 bodies	.50	$ 153.00

A4-34B

INTERCEPTOR PARTS

PART NO.	DESCRIPTION	NUMBER OF BOLTS REQU.	WEIGHT (LBS.)	LIST PRICE
MI-G-0-LID	Epoxy Lid for MI-G-0	1	20.00	$ 1,354.00
MI-G-1-LID	Epoxy Lid for MI-G-1	1	22.00	$ 1,354.00
MI-G-2-LID	Epoxy Lid for MI-G-2	1	25.00	$ 1,486.00
MI-G-3-LID	Epoxy Lid for MI-G-3	1	27.00	$ 1,757.00
MI-G-4-LID	Epoxy Lid for MI-G-4	1	29.00	$ 1,757.00
MI-G-5-LID	Epoxy Lid for MI-G-5	1	33.00	$ 1,757.00
MI-G-6-LID	Epoxy Lid for MI-G-6	4	36.00	$ 2,704.00
MI-G-7-LID	Epoxy Lid for MI-G-7	4	36.00	$ 2,704.00
MI-G-L-20-LID	Epoxy Lid for MI-G-L-20	4	45.00	$ 1,757.00
MI-G-L-35-LID(2)	Epoxy Lid for MI-G-L-35	8	55.00	$ 2,704.00
MI-G-L-50-LID(2)	Epoxy Lid for MI-G-L-50	8	70.00	$ 2,704.00
XL-MI-G-0-LID(2)	Epoxy Lid for XL-MI-G-0	8	125.00	$ 4,053.00
XL-MI-G-1-LID(2)	Epoxy Lid for XL-MI-G-1	8	150.00	$ 4,595.00
MI-CAP	Plastic Bolt Cap for MI-G Series, each		.50	$ 133.00
MI-BOLT	5/8"-11, 2" bolt, washer & neoprene gasket, (more than one bolt maybe required per lid)		1.00	$ 133.00
MI-G-GASKET	Two 25' Rolls of interceptor gasket (1/2" x 3/4") (50' total)		1.00	$ 895.00
MI-G-GASKET-25FT	One 25' Roll of interceptor gasket (1/2" x 3/4")		.10	$ 446.00
MI-G-SGS	Sewer gas stopper, each		.10	$ 101.00
MI-HAIR-O-RING	O-ring gasket for MI-HAIR lid		.10	$ 54.00

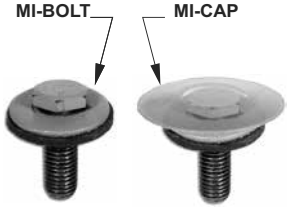

PARTS

INTERCEPTOR PARTS

(CROSS BAR)

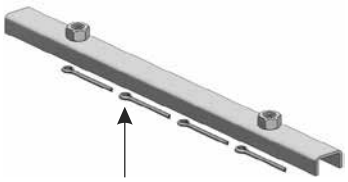

(COTTER PINS)

PART NO.	DESCRIPTION	LIST PRICE
MI-G-0-XBAR	Cross Bar & Cotter pins for MI-G-0	$ 406.00
MI-G-1-XBAR	Cross Bar & Cotter pins for MI-G-1	$ 406.00
MI-G-2-XBAR	Cross Bar & Cotter pins for MI-G-2	$ 458.00
MI-G-3-XBAR	Cross Bar & Cotter pins for MI-G-3	$ 458.00
MI-G-4-XBAR	Cross Bar & Cotter pins for MI-G-4	$ 544.00
MI-G-5-XBAR	Cross Bar & Cotter pins for MI-G-5	$ 544.00
MI-G-6-XBAR	Cross Bar & Cotter pins for MI-G-6 (1 set of 2 cross bars)	$ 812.00
MI-G-7-XBAR	Cross Bar & Cotter pins for MI-G-7 (1 set of 2 cross bars)	$ 812.00
MI-G-L-20-XBAR	Cross Bar & Cotter pins for MI-G-L-20 (1 set of 2 cross bars)	$ 544.00
MI-G-L-35-XBAR	Cross Bar & Cotter pins for MI-G-L-35 (1 set of 2 cross bars)	$ 805.00
MI-G-L-50-XBAR	Cross Bar & Cotter pins for MI-G-L-50 (1 set of 4 cross bars)	$ 1,405.00
XL-MI-G-0-XBAR	Cross Bar & Cotter pins for XL-MI-G-0 (1 set of 4 cross bars)	$ 1,405.00
XL-MI-G-1-XBAR	Cross Bar & Cotter pins for XL-MI-G-1 (1 set of 4 cross bars)	$ 1,891.00

(STAINLESS STEEL ORFICE PLATE)

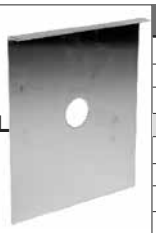

(SAMPLE BOX)

PART NO.	DESCRIPTION	LIST PRICE
MI-G-L-50-OP	Orifice Plate for MI-G-L-50	$ 634.00
XL- MI-G-0-OP	Orifice Plate for XL-MI-G-0	$ 843.00
XL-MI-G-1-OP	Orifice Plate for XL-MI-G-1	$ 950.00

PART NO.	SAMPLE BOXES	LIST PRICE	PART NO.	SAMPLE BOXES	LIST PRICE
G-XL-0-SMPB	Sample box - for XL-MI-G-0	$ 4,106.00	G-0-SMPB	Sample box - for MI-G-0	$ 4,096.00
G-XL-1-SMPB	Sample box - for XL-MI-G-1	$ 4,311.00	G-1-SMPB	Sample box - for MI-G-1	$ 4,096.00
G-XL-2-SMPB	Sample box - for XL-MI-G-2	$ 4,311.00	G-2-SMPB	Sample box - for MI-G-2	$ 4,096.00
G-XL-3-SMPB	Sample box - for XL-MI-G-3	$ 4,311.00	G-3-SMPB	Sample box - for MI-G-3	$ 4,096.00
G-XL-4-SMPB	Sample box - for XL-MI-G-4	$ 4,518.00	G-4-SMPB	Sample box - for MI-G-4	$ 4,096.00
G-XL-5-SMPB	Sample box - for XL-MI-G-5	$ 4,518.00	G-5-SMPB	Sample box - for MI-G-5	$ 4,096.00
G-XL-6-SMPB	Sample box - for XL-MI-G-6	$ 4,726.00	G-6-SMPB	Sample box - for MI-G-6	$ 4,096.00
G-XL-7-SMPB	Sample box - for XL-MI-G-7	$ 4,726.00	G-7-SMPB	Sample box - for MI-G-7	$ 4,096.00
G-XL-8-SMPB	Sample box - XL-MI-G-8	$ 5,568.00	G-L-20-SMPB	Sample box - MI-G-L-20	$ 4,096.00
G-XL-9-SMPB	Sample box - XL-MI-G-9	$ 5,568.00	G-L-35-SMPB	Sample box - MI-G-L-35	$ 4,096.00
G-XL-10-SMPB	Sample box - XL-MI-G-10	$ 5,568.00	G-L-50-SMPB	Sample box - MI-G-L-50	$ 4,096.00
G-XL-11-SMPB	Sample box - XL-MI-G-11	$ 5,568.00			

1 ½" VENT CONNECTION (FOR ALL)

(FLCT Series illustrated)

PART NO.	DESCRIPTION	LIST PRICE
FLCT-0	2" F.I.P. 4 G.P.M. Flow Control Fitting (.250" orifice size)	$ 544.00
FLCT-1	2" F.I.P. 7 G.P.M. Flow Control Fitting (.375" orifice size)	$ 544.00
FLCT-2	2" F.I.P. 10 G.P.M. Flow Control Fitting (.500" orifice size)	$ 544.00
FLCT-3	2" F.I.P. 15 G.P.M. Flow Control Fitting (.750" orifice size)	$ 544.00
FLCT-4	3" F.I.P. 20 G.P.M. Flow Control Fitting (1.000" orifice size)	$ 813.00
FLCT-5	3" F.I.P. 25 G.P.M. Flow Control Fitting (1.250" orifice size)	$ 813.00
FLCT-6	3" F.I.P. 35 G.P.M. Flow Control Fitting (1.500" orifice size)	$ 813.00
FLCT-7	3" F.I.P. 50 G.P.M. Flow Control Fitting (2.000" orifice size)	$ 813.00
FLCT-XL-0	4" F.I.P. 75 G.P.M. Flow Control Fitting (2.000" orifice size)	$ 1,077.00
FLCT-XL-1	4" F.I.P. 100 G.P.M. Flow Control Fitting (2.25" orifice size)	$ 1,077.00
FLC-0	2" No Hub 4 G.P.M. Flow Control Fitting (.250" orifice size)	$ 544.00
FLC-1	2" No Hub 7 G.P.M. Flow Control Fitting (.375" orifice size)	$ 544.00
FLC-2	2" No Hub 10 G.P.M. Flow Control Fitting (.500" orifice size)	$ 544.00
FLC-3	2" No Hub 15 G.P.M. Flow Control Fitting (.750" orifice size)	$ 544.00
FLC-4	3" No Hub 20 G.P.M. Flow Control Fitting (1.000" orifice size)	$ 813.00
FLC-5	3" No Hub 25 G.P.M. Flow Control Fitting (1.250" orifice size)	$ 813.00
FLC-6	3" No Hub 35 G.P.M. Flow Control Fitting (1.500" orifice size)	$ 813.00
FLC-7	3" No Hub 50 G.P.M. Flow Control Fitting (2.000" orifice size)	$ 813.00
FLC-XL-0	4" No Hub 75 G.P.M. Flow Control Fitting (2.000" orifice size)	$ 1,077.00
FLC-XL-1	4" No Hub 100 G.P.M. Flow Control Fitting (2.25" orifice size)	$ 1,077.00

Note: F.I.P. - Female iron pipe (threaded connection)

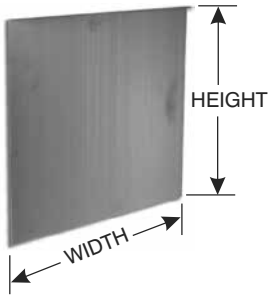

PART NO.	DESCRIPTION	LIST PRICE
MI-G-0-BAF	Baffle for MI-G-0 - 7" High x 8.80" Wide	$ 544.00
MI-G-1-BAF	Baffle for MI-G-1 - 7" High x 11.30" Wide	$ 544.00
MI-G-2-BAF	Baffle for MI-G-2 - 7" High x 13.30" Wide	$ 674.00
MI-G-3-BAF	Baffle for MI-G-3 - 10" High x 13.30" Wide	$ 813.00
MI-G-4-BAF	Baffle for MI-G-4 - 12.30" High x 13.30" Wide	$ 813.00
MI-G-5-BAF	Baffle for MI-G-5 - 12.60" High x 16.40" Wide	$ 813.00
MI-G-6-BAF	Baffle for MI-G-6 - 17.20" High x 21.30" Wide	$ 1,082.00
MI-G-7-BAF	Baffle for MI-G-7 - 19" High x 21.30" Wide	$ 1,082.00
MI-G-L-20-BAF	Baffle MI-G-L-20 - 6.70" High x 21.80" Wide	$ 813.00
MI-G-L-35-BAF	Baffle MI-G-L-35 - 6.70" High x 25.80" Wide	$ 2,526.00
MI-G-L-50-BAF	Baffle MI-G-L-50 - 6.70" High x 27.80" Wide	$ 2,526.00

Note: Only one baffle required per interceptor.

Design and dimensions are subject to modification. Prices do not include applicable taxes. Visit **www.mifab.com** for the most recent product information.
MIFAB®, Inc., 1321 West 119th Street, Chicago, Illinois 60643-5109, USA Toll Free: 1-800-465-2736 • Fax: 1-773-341-3049
All sales subject to MIFAB's® Terms & Warranties. Please refer to inside front cover. sales@mifab.com • Canada Toll Free: 1-800-387-3880

CARRIER PARTS

PART NO.	DESCRIPTION	WEIGHT (LBS.)	LIST PRICE
MC-100	**Standard nipple trim kit only** for adjustable chair carriers: MC-10, MC-12, MC-13*	40.00	$ 942.00
MC-100-AH8	**Adjustable horn nipple trim kit only** for adjustable chair carriers: MC-10, MC-12, MC-13*	40.00	$ 942.00
MC-100-OR	**Rolling thread nipple trim kit only** for adjustable chair carriers: MC-10, MC-12, MC-13*	40.00	$ 942.00
MC-100-NN	Trim kit only for adjustable chair carriers: MC-10, MC-12, MC-13* (no nipple included)	39.00	$ 834.00
MC-100-NN-14	Trim kit only for adjustable chair carriers: MC-10, MC-12, MC-13* (no nipple included and with threaded rods for 12" long nipples)	40.00	$ 834.00
MC-200	Trim Kit only for fixed vertical carriers: MC-14, MC-15* *Note: 2 required for double (back to back) carrier installations	33.00	$ 939.00

CARRIER FITTING+TRIM KIT= **COMPLETE CARRIER**

TRIM KITS ARE NOT COMPLETE CARRIERS! ADD APPROPRIATE CARRIER FITTING FROM BELOW!

NO HUB CARRIER FITTINGS

PART NO.	DESCRIPTION	WEIGHT (LBS.)	LIST PRICE
MC-10L-PF	Left Hand carrier fitting only for MC-10L horizontal adj. chair carrier	29.00	$ 943.00
MC-10R-PF	Right Hand carrier fitting only for MC-10R horizontal adj. chair carrier	29.00	$ 943.00
MC-10D-PF	Double carrier fitting only for MC-10D horizontal adj. chair carrier	43.00	$ 1,591.00
MC-10L-27-PF	Left Hand carrier fitting only for MC-10L-27 horizontal adj. chair carrier w/ aux. 2” inlet	31.00	$ 1,418.00
MC-10R-27-PF	Right Hand carrier fitting only for MC-10R-27 horizontal adj. chair carrier w/ aux. 2” inlet	31.00	$ 1,418.00
MC-10D-27-PF	Double carrier fitting only for MC-10D-27 horizontal adj. chair carrier w/ aux. 2” inlet	45.00	$ 2,066.00
MC-10L-27-37-PF	Left Hand carrier fitting only for MC-10D-27-36 horizontal adj. chair carrier w/ aux. 2” inlet and 37” barrel	55.00	$ 1,615.00
MC-10R-27-37-PF	Right Hand fitting only for MC-10D-27-36 horizontal adj. chair carrier w/ aux. 2” inlet and 37” barrel	55.00	$ 1,615.00
MC-10D-27-37-PF	Double carrier fitting only for MC-10D-27-36 horizontal adj. chair carrier w/ aux. 2” inlet and 37” barrel	71.00	$ 2,334.00
MC-10L-EXT-PF	High Rough in (ADA) Left Hand carrier fitting only for MC-10L-EXT horizontal adj. chair carrier	32.00	$ 1,120.00
MC-10R-EXT-PF	High Rough in (ADA) Right Hand carrier fitting only for MC-10R-EXT horizontal adj. chair carrier	32.00	$ 1,120.00
MC-10D-EXT-PF	High Rough in (ADA) Double carrier fitting only for MC-10D-EXT horizontal adj. chair carrier	46.00	$ 1,974.00

PART NO.	DESCRIPTION	WEIGHT (LBS.)	LIST PRICE
MC-12-PF	Carrier fitting only for MC-12 vertical adjustable chair carrier	39.00	$ 1,393.00
MC-12D-PF	Carrier fitting only for MC-12D vertical adjustable chair carrier	50.00	$ 2,247.00

PART NO.	DESCRIPTION	WEIGHT (LBS.)	LIST PRICE
MC-13-2-PF	Carrier fitting only for MC-13-2 vertical adjustable chair carrier w/ 2 side inlets and one TC-4 test cap	45.00	$ 2,211.00
MC-13L-PF	Carrier fitting only for MC-13L vertical adjustable chair carrier w/ left hand side inlet and one TC-4 test cap	45.00	$ 1,797.00
MC-13R-PF	Carrier fitting only for MC-13R vertical adjustable chair carrier w/ right hand side inlet and one TC-4 test cap	45.00	$ 1,797.00
MC-13D-PF	Carrier fitting only for MC-13D vertical adjustable back to back chair carrier w/ one side inlet and one TC-4 test cap	56.00	$ 2,632.00
MC-13D-2-PF	Carrier fitting only for MC-13D-2 vertical adjustable back to back chair carrier w/ two side inlets and one TC-4 test cap	56.00	$ 3,033.00

PART NO.	DESCRIPTION	WEIGHT (LBS.)	LIST PRICE
MC-14-3-V2-PF	Carrier fitting only for MC-14-3-V2 fixed vertical chair carrier w/ 3” barrel and 2” vent	26.00	$ 920.00
MC-14-4-V2-PF	Carrier fitting only for MC-14-4-V2 fixed vertical chair carrier w/ 4” barrel and 2” vent	31.00	$ 920.00
MC-14-4-V4-PF	Carrier fitting only for MC-14-4-V4 fixed vertical chair carrier w/ 4” barrel and 4” vent	31.00	$ 920.00
MC-15L-PF	Carrier fitting only for MC-15L fixed vertical chair carrier offset to left of stack	36.00	$ 903.00
MC-15R-PF	Carrier fitting only for MC-15R fixed vertical chair carrier offset to right of stack	36.00	$ 903.00
MC-15D-PF	Carrier fitting only for MC-15D fixed vertical back to back offset chair carrier	46.00	$ 1,284.00

HUB AND SPIGOT CARRIER FITTINGS

PART NO.	DESCRIPTION	WEIGHT (LBS.)	LIST PRICE
MC-10L-HS-PF	Left Hand carrier fitting only for MC-10L-HS hub & spigot horizontal adj. chair carrier	35.00	$ 1,180.00
MC-10R-HS-PF	Right Hand carrier fitting only for MC-10R-HS hub & spigot horizontal adj. chair carrier	35.00	$ 1,180.00
MC-10D-HS-PF	Double carrier fitting only for MC-10D-HS hub & spigot horizontal adj. chair carrier	45.00	$ 2,076.00
MC-10L-HS-27-PF	Left Hand carrier fitting only for MC-10L-HS-27 hub & spigot horizontal adj. chair carrier w/ aux. 2” inlet	37.00	$ 1,659.00
MC-10R-HS-27-PF	Right Hand carrier fitting only for MC-10R-HS-27 hub & spigot horizontal adj. chair carrier w/ aux. 2” inlet	37.00	$ 1,659.00
MC-10D-HS-27-PF	Double carrier fitting only for MC-10D-HS-27 hub & spigot horizontal adj. chair carrier w/ aux. 2” inlet	47.00	$ 2,554.00
MC-10L-HS-27-37-PF	Left Hand carrier fitting only for MC-10L-HS-27-37 hub & spigot horizontal adj. chair carrier w/ aux. 2” inlet and 37” barrel	66.00	$ 1,914.00
MC-10R-HS-27-37-PF	Right Hand carrier fitting only for MC-10R-HS-27-37 hub & spigot horizontal adj. chair carrier w/ aux. 2” inlet and 37” barrel	66.00	$ 1,914.00
MC-10D-HS-27-37-PF	Double carrier fitting only for MC-10D-HS-27-37 hub & spigot horizontal adj. chair carrier w/ aux. 2” inlet and 37” barrel	90.00	$ 3,084.00

PART NO.	DESCRIPTION	WEIGHT (LBS.)	LIST PRICE
MC-12-HS-PF	Carrier fitting only for MC-12-HS hub & spigot vertical adjustable chair carrier	45.00	$ 1,570.00
MC-12D-HS-PF	Carrier fitting only for MC-12D-HS hub & spigot vertical adjustable chair carrier	57.00	$ 2,457.00
MC-13-2-HS-PF	Carrier fitting only for MC-13-2-HS hub & spigot vertical adjustable chair carrier w/ 2 side inlets	58.00	$ 2,382.00
MC-13L-HS-PF	Carrier fitting only for MC-13L-HS hub & spigot vertical adjustable chair carrier w/ left hand side inlet	58.00	$ 1,974.00
MC-13R-HS-PF	Carrier fitting only for MC-13R-HS hub & spigot vertical adjustable chair carrier w/ right hand side inlet	58.00	$ 1,974.00
MC-13D-HS-PF	Carrier fitting only for MC-13D-HS hub & spigot vertical adjustable back to back chair carrier w/ one side inlet	69.00	$ 2,861.00
MC-13D-2-HS-PF	Carrier fitting only for MC-13D-2-HS hub & spigot vertical adjustable back to back chair carrier w/ two side inlets	69.00	$ 3,262.00

PART NO.	DESCRIPTION	WEIGHT (LBS.)	LIST PRICE
MC-14-4-V2-HS-PF	Carrier fitting only for MC-14-4-V2-HS hub & spigot fixed vertical chair carrier w/ 4” barrel and 2” vent	36.00	$ 969.00
MC-15L-HS-PF	Carrier fitting only for MC-15L-HS hub & spigot fixed vertical chair carrier offset to left of stack	41.00	$ 969.00
MC-15R-HS-PF	Carrier fitting only for MC-15R-HS hub & spigot fixed vertical chair carrier offset to right of stack	41.00	$ 969.00
MC-15D-HS-PF	Carrier fitting only for MC-15D-HS hub & spigot fixed vertical back to back offset chair carrier	50.00	$ 1,411.00

REAR ANCHOR FOOT SUPPORT SHIPPED AT NO CHARGE WITH CARRIER FITTING

MC-12-HS (HUB AND SPIGOT, VERTICAL ADJUSTABLE CARRIER FITTINGS)

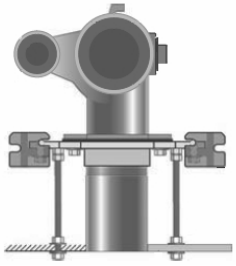

MC-12-HS

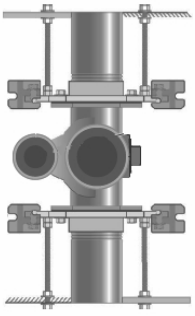

MC-12D-HS

PART NO.	DESCRIPTION	LIST PRICE
MC-12-HS-PF	Vertical, adjustable water closet carrier fitting, regular length	$ 1,570.00
MC-12-HS-25-PF	Vertical, adjustable water closet carrier fitting, one 2” aux. inlet tapping, right side, regular length	$ 2,046.00
MC-12-HS-26-PF	Vertical, adjustable water closet carrier fitting, one 2” aux. inlet tapping, left side, regular length	$ 2,046.00
MC-12-HS-31-PF	Vertical, adjustable water closet carrier fitting, two 2” aux. inlet tappings, regular length	$ 2,513.00
MC-12-HS-39-PF	Vertical, adjustable water closet carrier fitting, 41 1/4” long	$ 2,757.00
MC-12-HS-25-39-PF	Vertical, adjustable water closet carrier fitting, one 2” aux. inlet tapping, right side, 41 1/4” long	$ 3,233.00
MC-12-HS-26-39-PF	Vertical, adjustable water closet carrier fitting, one 2” aux. inlet tapping, left side, 41 1/4” long	$ 3,233.00
MC-12-HS-31-39-PF	Vertical, adjustable water closet carrier fitting, two 2” aux. inlet tappings, 41 1/4” long	$ 3,700.00
MC-12D-HS-PF	Vertical, adjustable water closet carrier back to back fitting, regular length	$ 2,457.00
MC-12D-HS-25-PF	Vertical, adjustable water closet carrier back to back fitting, one 2” aux. inlet tapping, right side, regular length	$ 2,933.00
MC-12D-HS-26-PF	Vertical, adjustable water closet carrier back to back fitting, one 2” aux. inlet tapping, left side, regular length	$ 2,933.00
MC-12D-HS-31-PF	Vertical, adjustable water closet carrier back to back fitting, two 2” aux. inlet tappings, regular length	$ 3,400.00
MC-12D-HS-39-PF	Vertical, adjustable water closet carrier back to back fitting, 41 1/4” long	$ 5,150.00
MC-12D-HS-25-39-PF	Vertical adjustable water closet carrier back to back fitting, one 2” aux. inlet tapping, right side, 41 1/4” long	$ 5,626.00
MC-12D-HS-26-39-PF	Vertical, adjustable water closet carrier back to back fitting, one 2” aux. inlet tapping, left side, 41 1/4” long	$ 5,626.00
MC-12D-HS-31-39-PF	Vertical, adjustable water closet carrier back to back fitting, two 2” aux. inlet tappings, 41 1/4” long	$ 6,093.00

MC-13-HS (HUB AND SPIGOT, VERTICAL ADJUSTABLE CARRIER FITTINGS WITH ONE OR TWO SIDE INLETS)

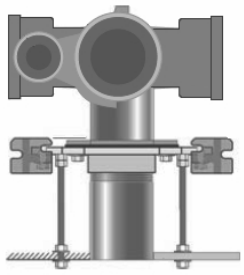

MC-13-HS

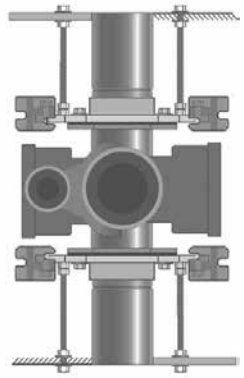

MC-13D-HS

PART NO.	DESCRIPTION	LIST PRICE
MC-13R-HS-PF	Vertical, adjustable water closet carrier fitting, one right hand side inlet, regular length	$ 1,974.00
MC-13R-HS-25-PF	Vertical, adjustable water closet carrier fitting, one right hand side inlet and one 2” aux. inlet, left side, regular length	$ 2,450.00
MC-13R-HS-39-PF	Vertical, adjustable water closet carrier fitting, one right hand side inlet, 41 1/4” long	$ 3,168.00
MC-13R-HS-25-39-PF	Vertical, adjustable water closet carrier fitting, one right hand side inlet and one 2” aux. inlet, left side, 41 1/4” long	$ 3,644.00
MC-13L-HS-PF	Vertical, adjustable water closet carrier fitting, one left hand side inlet, regular length	$ 1,974.00
MC-13L-HS-25-PF	Vertical, adjustable water closet carrier fitting, one left hand side inlet and one 2” aux. inlet, right side, regular length	$ 2,450.00
MC-13L-HS-39-PF	Vertical, adjustable water closet carrier fitting, one left hand side inlet, 41 1/4” long	$ 3,168.00
MC-13L-HS-25-39-PF	Vertical, adjustable water closet carrier fitting, one left hand side inlet and one 2” aux. inlet, right side, 41 1/4” long	$ 3,644.00
MC-13-2-HS-PF	Vertical, adjustable water closet carrier fitting, two side inlets, regular length	$ 2,382.00
MC-13-2-HS-39-PF	Vertical, adjustable water closet carrier fitting, two side inlets, 41 1/4” long	$ 3,569.00
MC-13D-HS-PF	Vertical, adjustable water closet carrier back to back fitting, one side inlet, regular length	$ 2,861.00
MC-13D-HS-25-PF	Vertical, adjustable water closet carrier back to back fitting, one side inlet and one 2” aux. inlet, 41 1/4” long	$ 3,337.00
MC-13D-HS-39-PF	Vertical, adjustable water closet carrier back to back fitting, one side inlet, 41 1/4” long	$ 4,017.00
MC-13D-HS-25-39-PF	Vertical, adjustable water closet carrier back to back fitting, one side inlet and one 2” aux. inlet, 41 1/4” long	$ 4,493.00
MC-13D-2-HS-PF	Vertical, adjustable water closet back to back carrier fitting, two side inlets, regular length	$ 3,282.00
MC-13D-2-HS-39-PF	Vertical, adjustable water closet back to back carrier fitting, two side inlets, 41 1/4” long	$ 4,422.00

Design and dimensions are subject to modification. Prices do not include applicable taxes. Visit **www.mifab.com** for the most recent product information.
MIFAB®, Inc., 1321 West 119th Street, Chicago, Illinois 60643-5109, USA Toll Free: 1-800-465-2736 • Fax: 1-773-341-3049
All sales subject to MIFAB's® Terms & Warranties. Please refer to inside front cover. sales@mifab.com • Canada Toll Free: 1-800-387-3880

MC-100 TRIM KIT CONTENTS*

CARRIER PARTS

PART NO.	DESCRIPTION	REQU'D QUANTITY	LIST PRICE
MC-10-PFPOZ	Faceplate w/ "O" ring	1	$ 443.00
MC-FP O-ring	Faceplate "O" ring gasket (included inside faceplate groove)	1	$ 26.50
MC-10-PFTZ	Foot (two assembled to MC-10-PFPOZ face plate)	2	$ 118.00 (for 2 pcs.)
H-1167-KA-10	5/8" X 10" Threaded rods with 5/8" hex nuts (to support toilet)	4	$ 64.00 (for 4 pcs.)
MC-10-PRP	8" plastic rod protector (assembled onto H-1167-KA-10 studs)	4	$ 8.00 (for 4 pcs.)
MC-10-PHP1 PARTS	**"FINISH" HARDWARE PACK $290.00 Price List for MC-10-PHP1**		**EACH**
H-1194	Chrome plated finishing cap nuts	4	$ 144.00 (for 4 pcs.)
MC-10-PBG	Neoprene Bowl gasket	1	$ 81.00
H-1176	Bowl saver washer	4	$ 8.50 each ($34.00 for 4 pcs.)
H-1166A	8 high density polyethylene washers (use with H-1176)	8	$ 4.50 each ($36.00 for 8 pcs.)
MC-10-PHP2 PARTS	**"ROUGH-IN" HARDWARE PACK $145.00 Price List for MC-10-PHP2**		**EACH**
MC-10-PFPG	Faceplate gasket (install between faceplate and fitting)	1	$ 51.00
H-1209	1/2" x 1-3/4" flanged bolts (to secure faceplate to fitting)	4	$ 5.50 each ($22.00 for 4 pcs.)
MC-10-PNS	Silicone Sealant for tapered thread & adj. Horn nipple	1	$ 42.00
MC-10-LUB	Lubricant for faceplate "O" ring nipple	1	$ 17.00
H-1164	5/8" Hex nuts (for use as "back-up" nuts on H-1167 studs behind faceplate)	4	$ 7.00 each ($28.00 for 4 pcs.)

NIPPLE PART NO.	DESCRIPTION		LIST PRICE
MC-10-PN8-31	8" Standard tapered thread ABS nipple	1	$ 119.50

KNOW YOUR GASKETS!

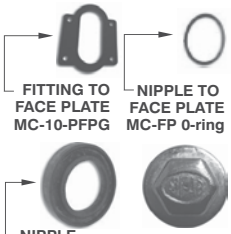

MC-10-PBG-CA

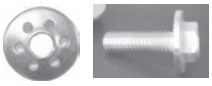
H-1176 H-1209

MC-200 TRIM KIT CONTENTS*

PART NO.	DESCRIPTION	REQU'D QUANTITY	LIST PRICE
MC-14-PFP	Faceplate	1	$ 405.00
MC-FP O-ring	Fitting "O" ring	1	$ 26.50
MC-10-PNS	Silicone Sealant for tapered thread & adj. horn nipple	1	$ 42.00
MC-10-LUB	Lubricant for faceplate "O" ring nipple	1	$ 17.00
MC-10-PFT	Foot	2	$ 118.00 (for 2 pcs.)
MC-10-PHP1	Hardware pack (contents listed above in MC-100 parts)	1	$ 290.00
H-1146	1/2" Flat washers	4	$ 7.00 each ($28.00 for 4 pcs.)
H-1141	1/2" X 1" Hex head machine screws	4	$ 23.00 each ($92.00 for 4 pcs.)
H-1167-KA-10	5/8" X 10" Threaded rods, (for rod protectors see MC-100 parts)	4	$ 64.00 (for 4 pcs.)
MC-14-PHP1 PARTS	**DESCRIPTION**	**REQU'D QUANTITY**	**LIST PRICE**
H-1164	5/8" Hex nuts	8	$ 7.00 each ($28.00 for 4 pcs.)
H-1209	1/2" x 1-3/4" flanged bolts	4	$ 5.50 each ($22.00 for 4 pcs.)
H-1146	1/2" Flat washers	4	$ 7.00 each ($28.00 for 4 pcs.)
NIPPLE PART NO.	**DESCRIPTION**	**REQU'D QUANTITY**	**LIST PRICE**
MC-10-PN8-31	8" Standard tapered thread ABS nipple	1	$ 119.50

MC-14-PFP

MC-10-LUB

MC-10-PNS

CLOSET CARRIER NIPPLE VARIATIONS

H-1167-KA-10

PART NO.	DESCRIPTION	CARRIER MODEL NUMBER SUFFIX	LIST PRICE
MC-10-PN8-31	8" Standard tapered thread ABS nipple	Standard	$ 119.50
MC-10-PN12-31*	12" tapered thread ABS nipple	-12	$ 127.00
MC-10-PN8R-31	8" rolling thread ABS nipple	-OR	$ 119.50
MC-10-PN12R-31*	12" rolling thread ABS nipple	-OR12	$ 127.00
MC-10-PN8AH-31	8" tapered thread ABS nipple with adjustable horn	-AH	$ 119.50
MC-10-PN12AH-31*	12" tapered thread ABS nipple with adjustable horn	-A12	$ 127.00
MC-10-PN4R-50	4" rolling thread cast iron nipple	-CI-4	$ 78.00
MC-10-PN6R-50	6" rolling thread cast iron nipple	-CI-6	$ 100.00
MC-10-PN8R-50	8" rolling thread cast iron nipple	-CI-8	$ 119.00
MC-10-PN12R-50*	12" rolling thread cast iron nipple	-CI-12	$ 256.00
MC-10-PN24R-50	24" rolling thread cast iron nipple	-CI-24	$ 395.00

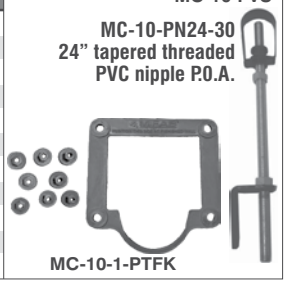

PARTS FOR CLOSET CARRIER NIPPLE VARIATIONS

PART NO.	DESCRIPTION	CARRIER MODEL NUMBER SUFFIX	LIST PRICE
MC-10-1-PTFK	Finishing tiling Frame w/ hardware kit	-1	$ 112.00
MC-10-3-PRSFK	Rear anchor support kit	-3 (normally furnished at no charge)	$ 77.00
MC-10-AFS	Auxillary fixture support for wide pipe chase	-10	$ 1121.00
H-1194-14	Set of 4 vandal proof fixture securing cap nuts	-14	$ 182.00
H-1194	Set of 4 fixture securing shoulder cap nuts	-S	$ 144.00
MC-10-PCW	Nipple wrench	-19	$ 142.00
MC-10-FVS	Flush Valve support	-20	$ 119.00
MC-10-PBG-FELT	Felt bowl gaskets for use with toilets		$ 81.00
MC-31-PBG-FELT	Felt gaskets for use with lavatories		$ 81.00
H-1167-KA-14	5/8" X 14" Threaded rod (For 4 pieces) (for 12" nipple)	(varies by longer nipple suffix)	$ 64.00
TC-2-50, TC-4-50	2" or 4" Caps for aux. /side inlets	(varies by closet carrier model)	$ 80.00
MC-10-FM-KIT	MC-10 floor mount kit - FM	(varies by closet carrier model)	$ 184.00

PARTS

PARTS — URINAL AND LAVATORY CARRIER PARTS

MC-40-50-PLN

H-1208

H-1104

MC-40-50-PN6

MC-41-PE2

MC-40-PHB

PART NO.	MC-31 PARTS DESCRIPTION	REQU'D QUANTITY	LIST PRICE
MC-31-PLA	Upright, 42"	2	$ **308.00** (for 2 pcs.)
MC-31-PUP	Universal plate	1	$ **273.00**
MC-31-PHP	Hardware pack (contents listed below)	1	$ **154.00**
PART NO.	**MC-31-PHP PARTS DESCRIPTION**	**REQU'D QUANTITY**	**LIST PRICE**
H-1104	5/16" U-Bolts	4	$ **12.00** each ($**48.00** for 4 pcs.)
H-1102	5/16" Hex nuts	8	$ **4.50** each ($**36.00** for 8 pcs.)
H-1087	1/4-20 x 8" Threaded rods	6	$ **12.00** each ($**72.00** for 6 pcs.)
H-1080	1/4-20 Hex nuts	24	$ **4.50** each ($**108.00** for 24 pcs.)
H-1081	1/4 Flat washers	32	$ **4.50** each ($**144.00** for 32 pcs.)
PART NO.	**MC-41 PARTS DESCRIPTION**	**REQU'D QUANTITY**	**LIST PRICE**
MC-40-PHB	Header bracket	2	$ **78.00** each ($**156.00** for 2 pcs.)
MC-40-PLA	Upright, 36"	2	$ **192.00** each ($**384.00** for 2 pcs.)
MC-41-PA	Concealed arm with locking & leveling hardware	2	$ **301.00** each ($**602.00** for 2 pcs.)
MC-40/50-PN6	6" Nipple & lock nut w/ screws for concealed arm	2	$ **78.00** each ($**156.00** for 2 pcs.)
MC-40/50-PLN	Locknut for nipple	2	$ **18.00** each ($**36.00** for 2 pcs.)
H-1137	Tie rod	1	$ **55.00**
H-1208	Eye bolt hardware kit for cast iron lavatories (**Suffix -**88 for MC-40, MC-41, lavatory carriers)	1	$ **199.00**
H-1083	1/4"-20 x1" Cup point set hex head screw	2	$ **9.00** each ($**18.00** for 2 pcs.)
H-1132	3/8" x ½" Cup point hex head screws	4	$ **9.00** each ($**36.00** for 4 pcs.)
H-1084	1/4" Rubber bumpers	4	$ **4.50** each ($**18.00** for 4 pcs.)
H-1126	3/8" Hex nuts	2	$ **4.50** each ($**9.00** for 2 pcs.)
PART NO.	**MC-30/40/50 SERIES PARTS VARIATIONS**	**REQU'D QUANTITY**	**LIST PRICE**
MC-31-PBP	Lower bearing plate for **MC-32**	1	$ **117.00**
H-1101	5/16" X 10" Threaded rods for MC-32 lower bearing plate	2	$ **27.50** each ($**55.00** for 2 pcs.)
H-1102	5/16" Nuts MC-32 bearing plate studs	4	$ **4.50** each ($**18.00** for 4 pcs.)
H-1103	5/16" Washers MC-32 bearing plate studs	4	$ **4.50** each ($**18.00** for 4 pcs.)
MC-40-PUA	Left or right exposed arm for **MC-40**	2	$ **418.00** each ($**836.00** for 2 pcs.)
MC-40-PUA-IK	Installation kit for MC-40-PUA exposed arm	2	$ **105.00** each ($**210.00** for 2 pcs.)
MC-40-R-PLA	Round upright, 36", for **MC-41-R** Series	2	$ **235.00** each ($**470.00** for 2 pcs.)
MC-41-PDB	Double header bracket for **MC-41-D**	2	$ **154.00** each ($**308.00** for 2 pcs.)
MC-40-R-PHB	Header bracket for round uprights	2	$ **90.00** each ($**180.00** for 2 pcs.)
MC-41-AHK	Replacement leveling & locking hardware for one arm only	1	$ **100.00**
MC-41-PE2	2" deep by 3-3/8" Dia. chrome plated escutcheon	2	$ **110.00** each ($**220.00** for 2 pcs.)
MC-41-R-PA	Concealed threaded arm with locking & leveling hardware for round header bracket	2	$ **301.00** each ($**602.00** for 2 pcs.)
MC-42-PA	ADA Lav. concealed arm with locking & leveling hardware	2	$ **350.00** each ($**700.00** for 2 pcs.)
MC-42-R-PA	ADA Lav. concealed threaded arm with locking & leveling hardware for round header bracket	2	$ **350.00** each ($**700.00** for 2 pcs.)
MC-53-PB	Adjustable wall bracket for **MC-50** Series	2	$ **189.00** each ($**378.00** for 2 pcs.)
H-1138	3/8" x 1/2" Flat phillips head machine screw for MC-53-PB	2	$ **4.50** each ($**9.00** for 2 pcs.)
H-1126	3/8" Hex nuts	2	$ **4.50** each ($**9.00** for 2 pcs.)
MC-51-PBP	Back plate for **MC-53** Series	2	$ **189.00** each ($**378.00** for 2 pcs.)
H-1101	5/16" x 10" Threaded rod	8	$ **28.00** each ($**56.00** for 2 pcs.)

HYDRANT PARTS

PART NO.	MHY INTERNAL PARTS DESCRIPTION	REQU'D QUANTITY	LIST PRICE
MHY-CIA-18-A	Universal hydrant repair kit for MHY-10 /20 (up to 18" wall thickness)	1	$ **436.00**
MHY-CIA-30/50	Universal hydrant repair kit for MHY-30 /50	1	$ **436.00**
MHY-1	Hydrant operating key	1	$ **115.00**
MHY-2	Chrome plated head nut	1	$ **115.00**
MHY-CIA-4000	Hydrant repair kit for MHY-40 Series up to MHY-40-14 only	1	$ **741.00**

MHY-CIA-18-A

PART NO.	PARTS FOR HYDRANT VARIATIONS	HYDRANT SUFFIX	LIST PRICE
HY-HC1	1" hose connection	-0	$ **292.00**
HY-H01	Wall clamp	-WC	$ **78.00**
HY-PC	3 Mounting brackets with hardware	-S	$ **192.00**

MHY-1 MHY-9004 HY-H01 HY-HC-1

PART NO.	MHY-90 SERIES REPLACEMENTS PARTS	REQU'D QUANTITY	LIST PRICE
MHY-9001	Brown plastic wheel handle	1	$ **161.00**
MHY-9002	Clear plastic wheel handle	1	$ **161.00**
MHY-9003	Cast iron wheel handle	1	$ **161.00**
MHY-9004	Operating key	1	$ **127.00**
HY-9000-VB	A.S.S.E. 1011 approved vacuum breaker - rough brass	1	$ **161.00**
HY-9000-VB-49	A.S.S.E. 1011 approved vacuum breaker - polished chrome	1	$ **204.00**
HY-1000-CP-NPB	A.S.S.E. 1019 approved vacuum breaker for MHY-10 Series	1	$ **204.00**

HY-1000-CP-NPB

CAST HYDRANT BOXES

PART NO.	PRODUCT FINISH	DESCRIPTION	LIST PRICE (-1,-3)	LIST PRICE (-49)
MHY-15-(1,3,49)*	Cast NB or SS or Ch. Plated	Standard Box for MHY-10 through MHY-55 Series (except MHY-40,45)	$ **923.00**	$ **1333.00**
MHY-15-(1,3,49)-S*	Cast NB or SS or Ch. Plated	Slotted Box with installation brackets and hardware for MHY-10 through MHY-55 Series (except MHY-40, 45)	$ **1187.00**	$ **1596.00**
MHY-15-(1,3,49)-NL*	Cast NB or SS or Ch. Plated	No lip box for MHY-60 Series	$ **923.00**	$ **1333.00**
MHY-95(1,3,49)*	Cast NB or SS or Ch. Plated	Cast Brass Box for MHY-90 Series	$ **1159.00**	$ **1619.00**
MHY-3-RB	Fabricated Type 304 Stainless Steel	Fabricated stainless steel Box with 6" round back opening for tilt up construction	$ **923.00**	$ **923.00**

*ADD A KEY LOCK TO ANY OF THE ABOVE HYDRANT BOXES BY SPECIFYING SUFFIX "-K" IN THE PART NUMBER ADDING **$249.00** TO LIST PRICE

Design and dimensions are subject to modification. Prices do not include applicable taxes. Visit **www.mifab.com** for the most recent product information.
MIFAB®, Inc., 1321 West 119th Street, Chicago, Illinois 60643-5109, USA
Toll Free: 1-800-465-2736 • Fax: 1-773-341-3049
sales@mifab.com • Canada Toll Free: 1-800-387-3880
All sales subject to MIFAB's® Terms & Warranties. Please refer to inside front cover.

FLOOR SINK TOP ASSEMBLIES - NICKEL BRONZE AND STAINLESS STEEL QUARTER SECTION GRATES

PART NO.	DESCRIPTION	WEIGHT (Lbs.)	LIST PRICE
FS1500-PG-125R-1	1/4 grate section, right hand side for 3 in 1 FS1500-TA-1 frame and grate top assembly, nickel bronze material	1.00	$ 160.00
FS1500-PG-125L-1	1/4 grate section, left hand side for 3 in 1 FS1500-TA-1 frame and grate top assembly, nickel bronze material	1.00	$ 160.00
FS1500-PG-125R-3	1/4 grate section, right hand side for 3 in 1 FS1500-TA-3 frame and grate top assembly, stainless steel material	1.00	$ 160.00
FS1500-PG-125L-3	1/4 grate section, left hand side for 3 in 1 FS1500-TA-3 frame and grate top assembly, stainless steel material	1.00	$ 160.00
FS1530-PG-125R-1	1/4 grate section, right hand side for 3 in 1 FS1530-TA-1 frame and grate top assembly, nickel bronze material	1.00	$ 160.00
FS1530-PG-125L-1	1/4 grate section, left hand side for 3 in 1 FS1530-TA-1 frame and grate top assembly, nickel bronze material	1.00	$ 160.00
FS1530-PG-125R-3	1/4 grate section, right hand side for 3 in 1 FS1530-TA-3 frame and grate top assembly, stainless steel material	1.00	$ 160.00
FS1530-PG-125L-3	1/4 grate section, left hand side for 3 in 1 FS1530-TA-3 frame and grate top assembly, stainless steel material	1.00	$ 160.00
FS1700-PG-125R-1	1/4 grate section, right hand side for 3 in 1 FS1700-TA-1 frame and grate top assembly, nickel bronze material	1.00	$ 321.00
FS1700-PG-125L-1	1/4 grate section, left hand side for 3 in 1 FS1700-TA-1 frame and grate top assembly, nickel bronze material	1.00	$ 321.00
FS1700-PG-125R-3	1/4 grate section, right hand side for 3 in 1 FS1700-TA-3 frame and grate top assembly, stainless steel material	1.00	$ 321.00
FS1700-PG-125L-3	1/4 grate section, left hand side for 3 in 1 FS1700-TA-3 frame and grate top assembly, stainless steel material	1.00	$ 321.00
FS1750-PG-125R-1	1/4 grate section, right hand side for 3 in 1 FS1750-TA-1 frame and grate top assembly, nickel bronze material	1.00	$ 279.00
FS1750-PG-125L-1	1/4 grate section, left hand side for 3 in 1 FS1750-TA-1 frame and grate top assembly, nickel bronze material	1.00	$ 279.00
FS1750-PG-125R-3	1/4 grate section, right hand side for 3 in 1 FS1750-TA-3 frame and grate top assembly, stainless steel material	1.00	$ 279.00
FS1750-PG-125L-3	1/4 grate section, left hand side for 3 in 1 FS1750-TA-3 frame and grate top assembly, stainless steel material	1.00	$ 279.00
FS1760-PG-125R-1	1/4 grate section, right hand side for 3 in 1 FS1760-TA-1 frame and grate top assembly, nickel bronze material	1.00	$ 480.00
FS1760-PG-125L-1	1/4 grate section, left hand side for 3 in 1 FS1760-TA-1 frame and grate top assembly, nickel bronze material	1.00	$ 480.00
FS1760-PG-125R-3	1/4 grate section, right hand side for 3 in 1 FS1760-TA-3 frame and grate top assembly, stainless steel material	1.00	$ 480.00
FS1760-PG-125L-3	1/4 grate section, left hand side for 3 in 1 FS1760-TA-3 frame and grate top assembly, stainless steel material	1.00	$ 480.00

Image of FS1700-PG-125R-1 or -3 quarter grate, right

Image of FS1700-PG-125L-1 or -3 quarter grate, left

How to identify what is a left hand or right hand quarter section grate: when looking at the top assembly with the half grate at the bottom, the quarter section grate on the left is the left hand quarter section and the quarter section grate on the right is the right hand quarter section.

FLOOR SINK TOP ASSEMBLIES - NICKEL BRONZE AND STAINLESS STEEL HALF SECTION GRATES

PART NO.	DESCRIPTION	WEIGHT (Lbs.)	LIST PRICE
FS1500-PG-150-1	1/2 grate section, for 3 in 1 FS1500-TA-1 frame and grate top assembly, nickel bronze material	2.00	$ 321.00
FS1500-PG-150-3	1/2 grate section, for 3 in 1 FS1500-TA-3 frame and grate top assembly, stainless steel material	2.00	$ 321.00
FS1530-PG-150-1	1/2 grate section, for 3 in 1 FS1530-TA-1 frame and grate top assembly, nickel bronze material	2.00	$ 321.00
FS1530-PG-150-3	1/2 grate section, for 3 in 1 FS1530-TA-3 frame and grate top assembly, stainless steel material	2.00	$ 321.00
FS1700-PG-150-1	1/2 grate section, for 3 in 1 FS1700-TA-1 frame and grate top assembly, nickel bronze material	2.00	$ 640.00
FS1700-PG-150-3	1/2 grate section, for 3 in 1 FS1700-TA-3 frame and grate top assembly, stainless steel material	2.00	$ 640.00
FS1750-PG-150-1	1/2 grate section, for 3 in 1 FS1750-TA-1 frame and grate top assembly, nickel bronze material	2.00	$ 560.00
FS1750-PG-150-3	1/2 grate section, for 3 in 1 FS1750-TA-3 frame and grate top assembly, stainless steel material	2.00	$ 560.00
FS1760-PG-150-1	1/2 grate section, for 3 in 1 FS1760-TA-1 frame and grate top assembly, nickel bronze material	2.00	$ 958.00
FS1760-PG-150-3	1/2 grate section, for 3 in 1 FS1760-TA-3 frame and grate top assembly, stainless steel material	2.00	$ 958.00

Image of FS1700-PG-150-1 or -3 half grate

R1300 SERIES SCUPPER DRAIN TOP ASSEMBLIES - GRATES AND COLLARS

PART NO.	DESCRIPTION	WEIGHT (Lbs.)	LIST PRICE
R1304T-TA-50	Cast iron scupper drain frame and grate assembly for R1300 Series - for 2", 3" and 4" outlet models	9.00	$ 400.00
R1304T-PG-50	Cast iron scupper drain grate only for R1300 Series - for 2", 3" and 4" outlet models	5.00	$ 200.00
R1304T-PC-50	Cast iron scupper drain frame only for R1300 Series (2 pieces) - for 2", 3" and 4" outlet models	5.00	$ 200.00
R1304T-TA-1	Nickel bronze scupper drain frame and grate assembly for R1300 Series - for 2", 3" and 4" outlet models	9.00	$ 920.00
R1304T-PG-1	Nickel bronze scupper drain grate only for R1300 Series - for 2", 3" and 4" outlet models	5.00	$ 521.00
R1304T-PC-1	Nickel bronze scupper drain frame only for R1300 Series (2 pieces) - for 2", 3" and 4" outlet models	5.00	$ 521.00
R1308T-TA-50	Cast iron scupper drain frame and grate assembly for R1300 Series - for 6" and 8" outlet models	9.00	$ 640.00
R1308T-PG-50	Cast iron scupper drain grate only for R1300 Series - for 6" and 8" outlet models	5.00	$ 321.00
R1308T-PC-50	Cast iron scupper drain frame only for R1300 Series (2 pieces) - for 6" and 8" outlet models	5.00	$ 321.00
R1308T-TA-1	Nickel bronze scupper drain frame and grate assembly for R1300 Series - for 6" and 8" outlet models	9.00	$ 1440.00
R1308T-PG-1	Nickel bronze scupper drain grate only for R1300 Series - for 6" and 8" outlet models	5.00	$ 720.00
R1308T-PC-1	Nickel bronze scupper drain frame only for R1300 Series (2 pieces) - for 6" and 8" outlet models	5.00	$ 720.00
R1324T-TA-50	Cast iron scupper drain frame and grate assembly for R1320 Series - for 2", 3" and 4" outlet models	9.00	$ 400.00
R1324T-PG-50	Cast iron scupper drain grate only for R1320 Series - for 2", 3" and 4" outlet models	5.00	$ 200.00
R1324T-PC-50	Cast iron scupper drain frame only for R1320 Series (2 pieces) - for 2", 3" and 4" outlet models	5.00	$ 200.00
R1324T-TA-1	Nickel bronze scupper drain frame and grate assembly for R1320 Series - for 2", 3" and 4" outlet models	9.00	$ 1040.00
R1324T-PG-1	Nickel bronze scupper drain grate only for R1320 Series - for 2", 3" and 4" outlet models	5.00	$ 521.00
R1324T-PC-1	Nickel bronze scupper drain frame only for R1320 Series (2 pieces) - for 2", 3" and 4" outlet models	5.00	$ 478.00
R1328T-TA-50	Cast iron scupper drain frame and grate assembly for R1320 Series - for 6" and 8" outlet models	5.00	$ 640.00

R1304T-TA-50 - frame and grate image

R1304T-PC-50 - image of frame

R1300 SERIES SCUPPER DRAIN TOP ASSEMBLIES - GRATES AND COLLARS

PART NO.	DESCRIPTION	WEIGHT (Lbs.)	LIST PRICE
R1328T-PG-50	Cast iron scupper drain grate only for R1320 Series - for 6" and 8" outlet models	5.00	**$ 321.00**
R1328T-PC-50	Cast iron scupper drain frame only for R1320 Series (2 pieces) - for 6" and 8" outlet models	5.00	**$ 321.00**
R1328T-TA-1	Nickel bronze scupper drain frame and grate assembly for R1320 Series - for 6" and 8" outlet models	9.00	**$ 1,440.00**
R1328T-PG-1	Nickel bronze scupper drain grate only for R1320 Series - for 6" and 8" outlet models	5.00	**$ 720.00**
R1328T-PC-1	Nickel bronze scupper drain frame only for R1320 Series (2 pieces) - for 6" and 8" outlet models	5.00	**$ 720.00**

AREA DRAIN TOP ASSEMBLIES - GRATE AND COLLAR VENEERS

PART NO.	DESCRIPTION	WEIGHT (Lbs.)	LIST PRICE
F1300-PGV-1	7" round, nickel bronze grate veneer only	1	**$ 160.00**
F1300-PCV-1	7" round, nickel bronze collar veneer only	0.50	**$ 128.00**
F1300-PGV-3	7" round, stainless steel grate veneer only	1.00	**$ 160.00**
F1300-PCV-3	7" round, stainless steel collar veneer only	0.50	**$ 128.00**
F1320-PGV-1	9" round, nickel bronze grate veneer only	1	**$ 160.00**
F1320-PCV-1	9" round, nickel bronze collar veneer only	0.50	**$ 128.00**
F1320-PGV-3	9" round, stainless steel grate veneer only	1.00	**$ 400.00**
F1320-PCV-3	9" round, stainless steel collar veneer only	0.50	**$ 128.00**
F1340-PGV-1	12" round, nickel bronze grate veneer only	1.25	**$ 536.00**
F1340-PCV-1	12" round, nickel bronze collar veneer only	0.75	**$ 183.00**
F1340-PGV-3	12" round, stainless steel grate veneer only	1.25	**$ 536.00**
F1340-PCV-3	12" round, stainless steel collar veneer only	0.75	**$ 183.00**
F1360-PGV-1	16" round, nickel bronze grate veneer only	2.00	**$ 1166.00**
F1360-PCV-1	16" round, nickel bronze collar veneer only	1.00	**$ 400.00**
F1360-PGV-3	16" round, stainless steel grate veneer only	2.00	**$ 1166.00**
F1360-PCV-3	16" round, stainless steel collar veneer only	1.00	**$ 400.00**
F1420-PGV-1	8" x 8" square, nickel bronze grate veneer only	1.00	**$ 400.00**
F1420-PCV-1	8" x 8" square, nickel bronze collar veneer only	0.50	**$ 145.00**
F1420-PGV-3	8" x 8" square, stainless steel grate veneer only	1.00	**$ 400.00**
F1420-PCV-3	8" x 8" square, stainless steel collar veneer only	0.50	**$ 145.00**
F1440-PGV-1	12" x 12" square, nickel bronze grate veneer only	1.25	**$ 624.00**
F1440-PCV-1	12" x 12" square, nickel bronze collar veneer only	0.75	**$ 217.00**
F1440-PGV-3	12" x 12" square, stainless steel grate veneer only	1.25	**$ 624.00**
F1440-PCV-3	12" x 12" square, stainless steel collar veneer only	0.75	**$ 217.00**
F1460-PGV-1	15" x 15" square, nickel bronze grate veneer only	2.00	**$ 1279.00**
F1460-PCV-1	15" x 15" square, nickel bronze collar veneer only	1.00	**$ 433.00**
F1460-PGV-3	15" x 15" square, stainless steel grate veneer only	2.00	**$ 1279.00**
F1460-PCV-3	15" x 15" square, stainless steel collar veneer only	1.00	**$ 433.00**

F1340-TA-1 or 3 image of grate and collar veneer

F1340-PGV-1 or 3 image of grate veneer

F1340-PCV-1 or 3 image of collar veneer

TRUE FIT AREA DRAIN TOP ASSEMBLIES - SEDIMENT BUCKET VENEERS

PART NO.	DESCRIPTION	WEIGHT (Lbs.)	LIST PRICE
F1320-TFB-PBV-1	9" round, nickel bronze sediment bucket veneer only	1.00	**$ 160.00**
F1320-TFB-PBV-3	9" round, stainless steel sediment bucket veneer only	1.00	**$ 160.00**

Note: the part number for the F1320-TFB grate veneer is F1300-PGV-1 for nickel bronze and F1300-PGV-3 for S.S. The part number for the F1320-TFB collar veneer is F1320-PGV-1 for nickel bronze and F1320-PGV-3 for S.S. All TFB veneers must have the ductile iron grates underneath them drilled and tapped at MIFAB before the veneer can be installed.

F1340-TFB-PBV-1	12" round, nickel bronze sediment bucket veneer only	2.00	**$ 321.00**
F1340-TFB-PBV-3	12" round, stainless steel sediment bucket veneer only	2.00	**$ 321.00**

Note: the part number for the F1340-TFB grate veneer is F1320-PGV-1 for nickel bronze and F1320-PGV-3 for S.S. The part number for the F1340-TFB collar veneer is F1340-PGV-1 for nickel bronze and F1340-PGV-3 for S.S. All TFB veneers must have the ductile iron grates underneath them drilled and tapped at MIFAB® before the veneer can be installed.

F1340-TFB-PBV-1 or 3 image of sediment bucket veneer

Design and dimensions are subject to modification. Prices do not include applicable taxes. Visit **www.mifab.com** for the most recent product information.
MIFAB®, Inc., 1321 West 119th Street, Chicago, Illinois 60643-5109, USA Toll Free: 1-800-465-2736 • Fax: 1-773-341-3049
All sales subject to MIFAB's® Terms & Warranties. Please refer to inside front cover. sales@mifab.com • Canada Toll Free: 1-800-387-3880

JOSAM - MIFAB CROSS REFERENCE

WATER CLOSET CARRIERS

JOSAM		MIFAB
11001	(pg. 250)	MC-21
11007	(pg. 250)	MC-21
11008	(pg. 250)	MC-21
12004	(pg. 237)	MC-10L-HS
12024	(pg. 237)	MC-10R-HS
12044	(pg. 237)	MC-10D-HS
12114A	(pg. 245)	MC-13L-HS
12134A	(pg. 245)	MC-13R-HS
12154A	(pg. 243)	MC-12D-HS
12174A	(pg. 245)	MC-13L-HS
12194A	(pg. 245)	MC-13R-HS
12214A	(pg. 245)	MC-13D-HS
12234A	(pg. 245)	MC-13R-HS
12254A	(pg. 245)	MC-13L-HS
12274A	(pg. 245)	MC-13-2-HS
12294A	(pg. 245)	MC-13-R-HS
12314A	(pg. 245)	MC-13D-HS
12674	(pg. 235)	MC-10L
12674-HS	(pg. 237)	MC-10L-HS
12674-58	(pg. 239)	MC-10L-27-37
12684	(pg. 235)	MC-10R
12684-HS	(pg. 237)	MC-10R-HS
12684-58	(pg. 239)	MC-10R-27-37
12694	(pg. 235)	MC-10D
12694-HS	(pg. 237)	MC-10D-HS
12694-58	(pg. 239)	MC-10D-27-37
12704	(pg. 244)	MC-13L
12704-D4	(pg. 244)	MC-13D
12704-HS	(pg. 245)	MC-13L-HS
12704-HS-HD4	(pg. 245)	MC-13D-HS
12704-HS-HLH4	(pg. 245)	MC-13L-HS
12704-HS-HRH4	(pg. 245)	MC-13R-HS
12704-LH4	(pg. 244)	MC-13L
12704-RH4	(pg. 244)	MC-13R
12714	(pg. 244)	MC-13R
12714-D4	(pg. 244)	MC-13D
12714-HS	(pg. 245)	MC-13R-HS
12714-HS-HD4	(pg. 245)	MC-13D-HS
12714-HS-HLH4	(pg. 245)	MC-13L-HS
12714-HS-HRH4	(pg. 245)	MC-13R-HS
12714-LH4	(pg. 244)	MC-13L
12714-RH4	(pg. 244)	MC-13R
12724	(pg. 242)	MC-12D
12724-D4	(pg. 242)	MC-12D
12724-HS	(pg. 243)	MC-12D-HS
12724-HS-HD4	(pg. 243)	MC-12D-HS
12724-HS-HVS4	(pg. 243)	MC-12D-HS
12724-OS4	(pg. 242)	MC-12D
12724-VS4	(pg. 242)	MC-12D
12734	(pg. 244)	MC-13L
12744	(pg. 244)	MC-13R
12754	(pg. 244)	MC-13D
12764	(pg. 244)	MC-13R
12774	(pg. 244)	MC-13L
12784	(pg. 244)	MC-13D
12794	(pg. 244)	MC-13L
12804	(pg. 244)	MC-13R
12814	(pg. 244)	MC-13D
14004	(pg. 249)	MC-15L-HS
14024	(pg. 249)	MC-15R-HS
14044	(pg. 249)	MC-15D-HS
14064	(pg. 247)	MC-14-4-V4-HS
14104	(pg. 247)	MC-14-4-V2-HS
14404	(pg. 248)	MC-15L
14424	(pg. 248)	MC-15R
14444	(pg. 248)	MC-15D
14464	(pg. 246)	MC-14-4-V4
14484	(pg. 248)	MC-15D
14504	(pg. 246)	MC-14-4-V2
15964	(pg. 251)	MC-27
15984	(pg. 251)	MC-28
16123	(pg. 250)	MC-21

WATER CLOSET CARRIERS OPTIONAL VARAIATIONS

JOSAM		MIFAB
-1	(pg. 365, 366)	-1
-2	(pg. 365, 366)	-13
-4	(pg. 365, 366)	-14
-6	(pg. 365, 366)	-20
-10	(pg. 365, 366)	-12
-21	(pg. 365, 366)	-16
-24	(pg. 365, 366)	-11
-30	(pg. 365, 366)	-CI-6
-35	(pg. 365, 366)	-6
-32	(pg. 365, 366)	-10
-35	(pg. 365, 366)	Std.
-45	(pg. 365, 366)	-27
-46	(pg. 365, 366)	-27
-49	(pg. 365, 366)	-27
-50	(pg. 365, 366)	-27
-53	(pg. 365, 366)	"X"
-54	(pg. 365, 366)	-27
-57	(pg. 365, 366)	-37
-58	(pg. 365, 366)	-37

***MC-14 or MC-15 are recommended alternatives. Less pipe space, lower cost & fewer parts.**

"X" Contact MIFAB

LAVATORY, URINAL & SINK CARRIERS

JOSAM		MIFAB
17100	(pg. 256)	MC-41
17100-BB	(pg. 257)	MC-41D
17105	(pg. 257)	MC-41D
17110	(pg. 262)	MC-51
17115	(pg. 262)	MC-53
17120	(pg. 262)	MC-51
17125	(pg. 262)	MC-51
17130	(pg. 262)	MC-51-LP
17380	(pg. 255)	MC-40
17380-BB	(pg. 255)	MC-40D
17380-HD	(pg. 255)	MC-40
17380-BB-HD	(pg. 255)	MC-40D
17385	(pg. 255)	MC-40D
17390	(pg. 264)	MC-56
17390-BP	(pg. 263)	MC-55
17395	(pg. 263)	MC-55
17400	(pg. 264)	MC-56
17405	(pg. 264)	MC-56-LP
17415	(pg. 255)	MC-40
17420	(pg. 255)	MC-40D
17425	(pg. 264)	MC-56
17430	(pg. 264)	MC-56
17435	(pg. 264)	MC-56
17440	(pg. 264)	MC-56-LP
17550	(pg. 252)	MC-31
17550-BB	(pg. 252)	MC-31D
17550-UR	(pg. 252)	MC-31
17550-WC	(pg. 252)	MC-31
17550-WCBL	(pg. 253)	MC-33
17550-CL	(pg. 252)	MC-31-C
17555	(pg. 252)	MC-31D
17560	(pg. 252)	MC-32
17560-BB	(pg. 252)	MC-32D
17560-UR	(pg. 252)	MC-32
17560-WC	(pg. 252)	MC-32
17560-WCBL	(pg. 253)	MC-33
17565	(pg. 252)	MC-32D
17570	(pg. 252)	MC-31-C
17575	(pg. 252)	MC-31
17580	(pg. 252)	MC-32
17585	(pg. 254)	MC-38D
17590	(pg. 254)	MC-36
17590-DP	(pg. 254)	MC-36D
17590-UR	(pg. 254)	MC-36
17590-UR-DP	(pg. 254)	MC-36D
17700	(pg. 255)	MC-40
17705	(pg. 255)	MC-40D
17710	(pg. 255)	MC-40
17715	(pg. 253)	MC-34
17720	(pg. 253)	MC-34
17725	(pg. 252)	MC-31
17730	(pg. 264)	MC-61-T
17735	(pg. 264)	MC-62-4-V2
17800	(pg. 252)	MC-31
17805	(pg. 252)	MC-31
17810	(pg. 252)	MC-32
17815	(pg. 252)	MC-32
17820	(pg. 252)	MC-32
17825	(pg. 264)	MC-61-T
17830	(pg. 254)	MC-38D
17835	(pg. 254)	MC-36
17895	(pg. 252)	MC-31
17900	(pg. 252)	MC-32
17905	(pg. 253)	MC-33-2
17910	(pg. 253)	MC-33

LAVATORY, URINAL & SINK CARRIERS OPTIONAL VARIATIONS

JOSAM		MIFAB
-2	(pg. 365, 366)	-TC
-4	(pg. 365, 366)	-14
-10	(pg. 365, 366)	-J
-11	(pg. 365, 366)	-CI
-60	(pg. 365, 366)	-G
-61	(pg. 365, 366)	-F
-66	(pg. 365, 366)	"X"
-67	(pg. 365, 366)	St&ard
-69	(pg. 365, 366)	-20
-75	(pg. 365, 366)	-E2
-76	(pg. 365, 366)	-E4
-77	(pg. 365, 366)	-E6

PUSH ON GASKETS

JOSAM		MIFAB
19802	(pg. 315)	POG-2
19803	(pg. 315)	POG-3
19804	(pg. 315)	POG-4
19805	(See NH book)	POG-5-SW
19806	(pg. 315)	POG-6
19812	(pg. 315)	POG-2
19813	(pg. 315)	POG-3
19814	(pg. 315)	POG-4
19815	(See NH book)	POG-5-SW
19816	(pg. 315)	POG-6
19825	(See NH book)	POG-5-SW
19826	(pg. 315)	POG-6

ROOF DRAINS

JOSAM		MIFAB
21000	(pg. 140)	R1220-E
21009-Z	(pg. 142)	R1260-E
21500	(pg. 127)	R1200
21500-6	(pg. 137)	R1200-Z
21500-AE	(pg. 128)	R1200-EU
21500-AER	(pg. 132)	R1200-JD-STR
21500-16	(pg. 137)	R1200-W
21509-Z	(pg. 142)	R1260
21500-19	(pg. 130)	R1200-G
21509-Z-19	(pg. 142)	R1260-G
21500-IRMA	(pg. 131)	.R1200-JC
21509-IRMA-Z	(pg. 142)	R1260-JC
21500-IRMA-6	(pg. 131)	R1200-JC-Z
22000	(pg. 140)	R1220-M
22010	(pg. 140)	R1220
22080	(pg. 122)	R1100
22100	(pg. 126)	R1150

22200	(pg. 143)	R1270-A5
22250	(pg. 140)	R1220-U
22500	(pg. 143)	R1270-A5
23000	(pg. 133)	R1200-PR
23009-Z	(pg. 142)	R1260-PR
23010	(pg. 133)	R1200-PR-90
23500	(pg. 133)	R1200-PR15
23500-6	(pg. 133)	R1200-Z-PR15
23500-AE	(pg. 133)	R1200-PR-EU
23500-18	(pg. 72)	F1470
23509-Z	(pg. 142)	R1260-PR15
23500-IRMA	(pg. 133)	R1200-PR15-JC
23509-Z-IRMA	(pg. 142)	R1260-PR15-JC
23500-IRMA-6	(pg. 133)	R1200-PR15-Z
23510	(pg. 65)	F1360
23530	(pg. 133)	R1200-PR
23710	(pg. 141)	R1220-PR
23730	(pg. 125)	R1100-PR
23740	(pg. 125)	R1100-PR-1
24020	(pg. 57)	F1320-Y-Z-14
24030	(pg. 60)	F1340-Y-Z-14
24040	(pg. 74)	F1530
24050	(pg. 75)	F1540
24060	(pg. 75)	F1550
24200	(pg. 133)	R1200-JC-PR-Z
24500	(pg. 150)	R1400-83-HM
24500-45	(pg. 151)	R1410
24500-90	(pg. 151)	R1420
24520	(pg. 151)	R1420-83-HM
24540	(pg. 151)	R1410-83-HM
24700	(pg. 148)	R1300T
24700-45	(pg. 148)	R1310
24710	(pg. 148)	R1310
24720	(pg. 149)	R1320T
24720-45	(pg. 149)	R1330
24730	(pg. 149)	R1330
24900	(pg. 148)	R1310
25000	(pg. 153)	R1640
25010	(pg. 156)	R1940
25500	(pg. 135)	R1200-RS
25520	(pg. 141)	R1220-RS
25540	(pg. 125)	R1100-RS
26000	(pg. 137)	R1200-W-E
26010	(pg. 137)	R1200-W
26200	(pg. 155)	R1900
26400	(pg. 154)	R1850
26450	(pg. 154)	R1850
26700	(pg. 155)	R1930
28500	(pg. 130)	R1200-F-E
28600	(pg. 130)	R1200-F
28600-AE	(pg. 128)	R1200-EU-F
29000	(pg. 137)	R1200-W
29112	(pg. 142)	R1260

ROOF DRAINS OPTIONAL VARIATIONS

JOSAM		MIFAB
-1	Underdeck clamp	-U
-2	Sump receiver	-B
-3	Deck clamp assembly with sump receiver	-B-U
-4	Sec. membrane ring	-C
-10	Fixed extension	-V
-30	Fixed extension Galvanized finish	-V-12
-12	Extension flashing coll	-E
-15	Rough bronze clamp collar	-C-12
-17	2” high solid membrane clamp	-R
-19	Stainless steel mesh screen over dome	-83
-20	All galvanized	-13
-21	Galvanized dome	-12
-22	Metal dome	-M
-23	Rough bronze dome	-81
-24	Nikaloy top	-1
-26	Aluminum dome	-M-80
-27	High dome	St&ard
-29	Sediment bucket	-5
-49	Galv. sediment bucket	-18
-30	V&al proof	-6
-31	Chained locking grate	-23
-32	SS mesh screen over dome	-83
-33	Membrane clamp with ballast guard	-C-G
-33	Stainless steel mesh screen over dome	-83
-35	Flat grate	Std
-36	Ductile iron grate	Std
-87	Ductile iron grate	-1 with NB veneer
-88	Ductile iron grate	-1 with PB veneer
-50	Nikaloy top	-1
-51	Nickel bronze top	-1
-61	Downspout elbow	“X”
-66	No hub side outlet	-90
-T	Threaded outlet	T
-Y	Push on outlet	P
-X	Inside caulk outlet	X
-Z	No hub outlet	Std

FLOOR & AREA DRAINS

JOSAM		MIFAB
30000	(pg. 315)	A1-C*
30000-A	(pg. 37)	F1100-C*
30000-A-SST	(pg. 37)	F1000-C-29*
30000-AJ	(pg. 37)	F1100-C-8*
30000-C	(pg. 37)	F1100-C-5*
30000-D	(pg. 42)	F1100-C-K*
30000-E	(pg. 42)	F1100-C-N*
30000-E1	(pg. 40)	F1100-C-ER*
30000-E2	(pg. 39)	F1100-C-EF*
30000-E3	(pg. 39)	F1100-C-EG*
30000-P	(pg. 38)	F1100-C-AS*
30000-PD	(pg. 49)	F1160-PB
30000-S-SS-T	(pg. 43)	F1000-C-S-29*
30000-ST	(pg. 49)	F1120-C-PB*
30000-ST-A	(pg. 49)	F1120-C*
30000-TSO	(pg. 315)	A1-T-90-7-C*
30000-R	(pg. 43)	F1100-C-RS*
30000-S	(pg. 43)	F1100-C-S*
30200-AD	(pg. 40)	.F1100-C-FC*
30304-Z	(pg. 316)	A4 Body
30304-Z-A	(pg. 55)	F1220
30500	(pg. 49)	F1130C body
30500-A	(pg. 52)	F1130C
30500-S	(pg. 52)	F1130C-S
30600	(pg. 49)	F1120-C* body
30600-A	(pg. 52)	F1120-C*
30802-4CP	(pg. 52)	F1120-C-5-49*
30900-9AD	(pg. 40)	F1100-C-FC9*
31000	(pg. 37)	F1100-C-1*
31100	(pg. 57)	F1320-C-14*
32100-39	(pg. 57)	F1320-C-Y-14-25*
32100-81	(pg. 57)	F1320-C-TFB*
32100-AE	(pg. 57)	F1320-C-Y-14-4-15*
32100-AE-81	(pg. 57)	F1320-C-TFB-15*
32100-AE-LC1-88	(pg. 57)	F1320-C-Y-14-1-15*
32100-AE-TG	(pg. 57)	F1320-C-Y-14-4-15*
32100-SS-AE	(see website)	P3100-29
32100-SS-AE	(see website)	P3100-29-SB
32100-TG	(pg. 57)	F1320-C-Y-14-4*
32150	(pg. 79)	F1640
32160	(pg. 67)	F1430C
32200-81	(pg. 62)	F1340-C-Y-14-Q-5
32200-AE	(pg. 60)	F1340-C-15*
32200-AE-81	(pg. 60)	F1340-C-5-15*
32200-AE-SD	(pg. 60)	F1340-C-5-15*
32200-SD	(pg. 62)	F1340-C-Y-14-Q
32200-SS	(see website)	P3100-29
32300-81	(pg. 63)	F1350-C-5*
32330-SD	(pg. 63)	F1350-C-5*
34710	(pg. 71)	F1460-C*
35100	(pg. 67)	F1420-C*
35130-14-1	(pg. 67)	F1430C-33-5-1
35170	(pg. 67)	F1430C-5
37830	(pg. 70)	F1450-C-Y-5-4*
37840	(pg. 70)	F1450-C-Y-5-4*
37900	(pg. 71)	F1460-C-5-4*
37960	(pg. 73)	F1490-FL-C-4
38420-IGS	(pg. 212)	MI-OS-2
38640	(pg. 68)	F1440-90-4-5
38820	(pg. 73)	F1490-FL-4-5
38850	(pg. 77)	F1580
31120	(pg. 57)	F1320-C-5C14*
31200	(pg. 60)	F1340-14
31210	(pg. 60)	F1340-90
31220	(pg. 60)	F1340-5-14
31600	(pg. 57)	F1320-C*
31720	(pg. 60)	F1340-C*
31800	(pg. 68)	F1440-4-5
32100	(pg. 57)	F1320-C-Y-14*
32120	(pg. 57)	F1320-C-Y-5-14*
32200	(pg. 62)	F1340-C-Y-14-Q*
32220	(pg. 62)	F1340-C-Y-5-14-Q*
32300	(pg. 63)	F1350-C*
32320	(pg. 60)	F1340-C-Y-5-14*
32330	(pg. 63)	F1350-C-5*
34720	(pg. 66)	F1370-C-Y-5-14*
34920	(pg. 66)	F1370-C-TFB*
35130	(pg. 67)	F1430C-5
35230	(pg. 44)	F1100-C-SHG8-3-5*
35330	(pg. 73)	F1480-FL-5
35430	(pg. 73)	F1480-FL-5-9
35440	(pg. 68)	F1440-14
35460	(pg. 71)	F1460-Y
35580	(pg. 73)	F1480
35620A	(pg. 68)	F1440-5-6
35720A	(pg. 70)	F1450-5-6
36000	(pg. 57)	F1320-C-Y*
36100	(pg. 59)	F1330C-Y
36210	(pg. 62)	F1340-Y-Q
36340	(pg. 63)	F1350-5
36410	(pg. 65)	F1360-C-Y*
36640	(pg. 68)	F1440-5-9-90
36820A	(pg. 72)	F1470-Y-5-14
36850	(pg. 81)	F1760-FL
37500	(pg. 67)	F1420-Y-14
37770A	(pg. 68)	F1440-5-33
37800	(pg. 68)	F1440-Y-14
37810	(pg. 68)	F1440-C-Y-5-4*
37820	(pg. 68)	F1440-C-Y-5-4*
38040	(pg. 53)	F1140C-9
38250A	(pg. 53)	F1140C-9
38420	(pg. 66)	F1370-17
38620-40	(pg. 187)	C1600
38830	(pg. 76)	F1560
38930	(pg. 212)	MI-OS
39000	(pg. 80)	F1650-25-1
39150	(pg. 79)	F1640-C
39240	(pg. 64)	F1350-Y-36-16
39420	(pg. 66)	F1370-18
39600	(pg. 82)	F1810
39720	(pg. 63)	F1350-Z-5
39960	(pg. 44)	F1100-SHG8-3

PLASTIC DRAINS

JOSAM		MIFAB
JPD	(pg. 55)	F1230-30-1
JPD-5PVC	(pg. 55)	F1230-30-1
JPFD-3200	(pg. 55)	F1230-30-1
JPG3x4-J5	(pg. 55)	F1220-30-5-1
JPG3x4-J5PVC	(pg. 55)	F1220-30-5-1
JPG3x4-J6	(pg. 55)	F1220-30-6-1
JPG3x4-J6SQ	(pg. 55)	F1220-30-S6-1
JPFD-J5	(pg. 37)	F1100-C-30-5-1*
JPFD-J5PVC	(pg. 37)	F1100-C-30-5-1*
JPFD-J6	(pg. 37)	F1100-C-30-6-1*
JPFD-J6SQ	(pg. 43)	F1100-C-30-S6-1*
JPFS-PVC	.....	“X”
JPRD-CI	(pg. 122)	R1100-M-30
JPVC-1600	(pg. 176)	C1230-30-1
JPFC-3x4	(pg. 168)	C1100-R-30-1
30000-PVC	(pg. 315)	A1-30-7-C*
30300-PVC	(pg. 316)	A4-30-7
49320-PVC	(see CLPB book)	FS720-30
58360	(pg. 175)	C1220-30-R-1

Design and dimensions are subject to modification. Prices do not include applicable taxes. Visit **www.mifab.com** for the most recent product information.
MIFAB®, Inc., 1321 West 119th Street, Chicago, Illinois 60643-5109, USA Toll Free: 1-800-465-2736 • Fax: 1-773-341-3049
All sales subject to MIFAB's® Terms & Warranties. Please refer to inside front cover. sales@mifab.com • Canada Toll Free: 1-800-387-3880

FLOOR & AREA DRAINS OPTIONAL VARIATIONS

JOSAM			MIFAB
-1	Nickel Bronze	(pg. 365, 366)	-1
-2	Polished bronze	(pg. 365, 366)	-2
-3	Buffed polished NB	(pg. 365, 366)	-10
-4	Buffed polished bronze	(pg. 365, 366)	-10
-5	Rough NB top	(pg. 365, 366)	-1
-6	Rough bronze top	(pg. 365, 366)	-2
-7	Ductile iron grate	(pg. 365, 366)	-4
-8	SS screen dome	(pg. 365, 366)	-83
-10	Less grate	(pg. 365, 366)	-22
-11	Extra heavy duty grate	(pg. 365, 366)	-4
-12	Square top	(pg. 365, 366)	-16
-13	Dome grate	(pg. 365, 366)	-20
-14	NB dome grate	(pg. 365, 366)	-21
-15	PB dome grate	(pg. 365, 366)	-22
-14	Hinged grate	(pg. 365, 366)	-14
-15	Chained grate	(pg. 365, 366)	-23
-16	Locking grate	(pg. 365, 366)	-6
-17	V&al proof	(pg. 365, 366)	-6
-19	C.I. undergrate with NB top	(pg. 365, 366)	-3
-20	CI undergrate with	(pg. 365, 366)	-2
	satin bronze top	(pg. 365, 366)	
-21	Loose set grate	(pg. 365, 366)	-14
-22	Less locking device	.....	X”
-24	Less dome	(pg. 365, 366)	-(-D)
-33	Galvanized sed. Bucket	(pg. 365, 366)	-18
-40	Less flange	(pg. 365, 366)	-33
-41	Membrane clamp	(pg. 365, 366)	-C
-42	Membrane clamp	(pg. 365, 366)	-C
-43	Levelling studs	.....	X”
-44	Extension	(pg. 365, 366)	-15
-44-92	Galvanized extension	(pg. 365, 366)	-28
-45	Integral extension	(pg. 365, 366)	-15
-49	3/4” TSP tapping	(pg. 365, 366)	-3/4”
-50	TSP tapping	(pg. 365, 366)	-7
-51	1-1/2” aux. threaded inlet	(pg. 365, 366)	-44
-52	2” aux. threaded inlet	(pg. 365, 366)	-44T
-53	2” auxiliary hub inlet	(pg. 365, 366)	-44NH
-54	2” aux.spigot inlet	(pg. 365, 366)	-44X
-60	Backwater valve	(pg. 365, 366)	-8
-61	Less backwater valve	.....	“X”
-62	Closure plug	(pg. 365, 366)	-34
-63	Spanner wrench	(pg. 365, 366)	H-1042
-64	Bronze closure plug	(pg. 365, 366)	-34B
-66	No hub side outlet	(pg. 365, 366)	-90NH
-70	Less bucket		“X”
-71	Solid sediment bucket	(pg. 365, 366)	-5
-72	Solid bucket with bronze screen ports		-83
-74	Solid alum. bucket		-69
-75	Solid alum. bucket with bronze screen ports		-83
-80	SS sediment bucket	(pg. 365, 366)	A1-SSB
-81	Slotted cast iron bucket	(pg. 365, 366)	-5
-82	Aluminum bucket	(pg. 365, 366)	-5
-84	SS mesh lined bucket	(pg. 365, 366)	-88
-88	Secondary strainer	(pg. 365, 366)	-21
-89	Underdeck clamp	(pg. 365, 366)	-40
-91	Rough bronze body	(pg. 365, 366)	-27
-92	All galvanized	(pg. 365, 366)	-13
-93	All cast iron	(pg. 365, 366)	-50
-94	Bronze dome	(pg. 365, 366)	-81
-98	Control box	(pg. 365, 366)	MI-VB
-99	Extension	(pg. 365, 366)	-15
-T	Threaded outlet	(pg. 365, 366)	T
-W	Extension	(pg. 365, 366)	-15
-X	Inside caulk outlet	(pg. 365, 366)	X
-Y	Push on outlet	(pg. 365, 366)	P
-Z	No hub outlet	(pg. 365, 366)	St

30000 SERIES STRAINER OPTIONAL VARIATIONS

JOSAM		MIFAB
A	(pg. 50)	Std
5A	(pg. 50)	5-1
6A	(pg. 50)	6-1
7A	(pg. 50)	7-1
8A	(pg. 50)	8-1
9A	(pg. 50)	10-1
10A	(pg. 50)	10-1
AD	(pg. 50)	FC
6AD	(pg. 50)	FC7-1
9AD	(pg. 50)	FC9-1
AF	(pg. 50)	FT6
6AF	(pg. 50)	FT6-1
AJ	(pg. 50)	Std -8
5AJ	(pg. 50)	39452
6AJ	(pg. 50)	39453
7AJ	(pg. 50)	7-1-8
C	(pg. 50)	43956
5C	(pg. 50)	38357
D	(pg. 50)	K
5D	(pg. 50)	K5-1
6D	(pg. 50)	K5-1
E	(pg. 50)	N
6E	(pg. 50)	N7-1
7E	(pg. 50)	N7-1
9E	(pg. 50)	N9-1
E1	(pg. 50)	ER
60	(pg. 50)	ER7-1
70	(pg. 50)	ER7-1
90	(pg. 50)	ER9-1
E2	(pg. 50)	EF4
700	(pg. 50)	EF4-1
E3	(pg. 50)	EG
7000	(pg. 50)	EG-1
EJ	(pg. 50)	N-8
6EJ	(pg. 50)	N7-1-8
7EJ	(pg. 50)	N7-1-8
9EJ	(pg. 50)	N9-1-8
F	(pg. 51)	T
6F	(pg. 51)	T6-3
F4	(pg. 50)	F4-1
F6	(pg. 50)	F6-1
F8	(pg. 50)	J-1
F9	(pg. 50)	G-1
F52	(pg. 50)	F4-1
F53	(pg. 50)	F4-1
G	(pg. 51)	VD
5G	(pg. 51)	VD5-3
H	(pg. 50)	HG
5H	(pg. 50)	HG5-3
6H	(pg. 50)	HG7-3
7H	(pg. 50)	HG7-3
8H	(pg. 50)	HG8-3
M	(pg. 51)	WD
2M	(pg. 51)	WD-3
3M	(pg. 51)	WD-3
P	(pg. 50)	AS
4P	(pg. 50)	AS-1
6P	(pg. 50)	AS-1
R	(pg. 50)	RS
5R	(pg. 50)	RS-48-1
6R	(pg. 50)	RS-412-1
7R	(pg. 50)	RS-517-3
8R	(pg. 50)	RS-517-3
S	(pg. 51)	S St&ard
5S	(pg. 51)	S5-1
6S	(pg. 51)	S6-1
8S	(pg. 51)	S8-1
9S	(pg. 51)	S10-1

“X” Contact MIFAB

30000 SERIES STRAINER OPTIONAL VARIATIONS

JOSAM		MIFAB
SJ	(pg. 51)	S5-8
5SJ	(pg. 51)	S5-1-8
6SJ	(pg. 51)	S6-1-8
8SJ	(pg. 51)	S8-1-8
T	(pg. 51)	SHG
5T	(pg. 47)	SHG6-3
6T	(pg. 51)	SHG6-3
9T	(pg. 51)	SHG8-3
W	(pg. 50)	DD
2W	(pg. 50)	DD-50
4W	(pg. 50)	DD-50
6W	(pg. 50)	DD-50
WF6S	(pg. 51)	ZS-1

*Includes “-C” membrane clamp in areas with waterproof membrane. As a recommended alternate, use F1100 in non membrane areas, delete “-C” membrane clamp

FLOOR SINKS

JOSAM		MIFAB
49000	(pg. 97)	FS1520-FL-1
49010	(pg. 97)	FS1520-1
49020AS	(pg. 99)	FS1720-FL-1
49030AS	(pg. 99)	FS1720-1
49040AS	(pg. 100)	FS1730-FL-1
49050AS	(pg. 100)	FS1730-1
49060AS	(pg. 101)	FS1740-FL-1
49070AS	(pg. 101)	FS1740-1
49100	(pg. 73)	F1490-FL-1-11
49110	(pg. 73)	F1490-1-11
49120	(pg. 73)	F1490-FL-1-11
49130	(pg. 73)	F1490-1-11
49200	(pg. 102)	FS1750-FL-1
49210	(pg. 102)	FS1750-1
49220A	(pg. 102)	FS1750-FL-1
49230A	(pg. 102)	FS1750-1
49280A	(pg. 103)	FS1760-FL-1
49290A	(pg. 103)	FS1760-1
49300	(pg. 97)	FS1520-FL
49300-LF	(pg. 97)	FS1520
49300-NB	(pg. 97)	FS1520-FL-1
49300-LF-NB	(pg. 97)	FS1520-1
49310	(pg. 97)	FS1520
49320A	(pg. 99)	FS1720-FL
49320A-LF	(pg. 99)	FS1720
49320A-NB	(pg. 99)	FS1720-FL-1
49320A-LF-NB	(pg. 99)	FS1720-1
49330A	(pg. 99)	FS1720
49340A	(pg. 100)	FS1730-FL
49340A-LF	(pg. 100)	FS1730
49340A-NB	(pg. 100)	FS1730-FL-1
49340A-LF-NB	(pg. 100)	FS1730-1
49350A	(pg. 100)	FS1730
49360A	(pg. 101)	FS1740-FL
49360A-LF	(pg. 101)	FS1740
49360A-NB	(pg. 101)	FS1740-FL-1
49360A-LF-NB	(pg. 101)	FS1740-1
49370A	(pg. 101)	FS1740
49400	(pg. 104)	FS1770-FL
49400-LF	(pg. 104)	FS1770
49400-NB	(pg. 104)	FS1770-FL-1
49400-LF-NB	(pg. 104)	FS1770-1
49410	(pg. 104)	FS1770
49420	(pg. 105)	FS1790-FL
49420-LF	(pg. 105)	FS1790
49420-NB	(pg. 105)	FS1790-FL-1
49420-LF-NB	(pg. 105)	FS1790-1
49430	(pg. 105)	FS1790
49500	(pg. 102)	FS1750-FL
49500-LF	(pg. 102)	FS1750
49500-NB	(pg. 102)	FS1750-FL-1
49500-LF-NB	(pg. 102)	FS1750-1
49510	(pg. 102)	FS1750
49520A	(pg. 102)	FS1750-FL
49520A-LF	(pg. 102)	FS1750
49520A-NB	(pg. 102)	FS1750-FL-1
49520A-LF-NB	(pg. 102)	FS1750-1
49530A	(pg. 102)	FS1750
49580A	(pg. 103)	FS1760-FL
49580A-LF	(pg. 103)	FS1760
49580A-NB	(pg. 103)	FS1760-FL-1
49580A-LF-NB	(pg. 103)	FS1760-1
49590A	(pg. 103)	FS1760
49600	(pg. 98)	FS1530-FL-1
49610	(pg. 98)	FS1530-1
49620	(pg. 98)	FS1530-FL-1
49630	(pg. 98)	FS1530-1
49700	(pg. 98)	FS1530-FL
49700-LF	(pg. 98)	FS1530

49700-NB	(pg. 98)	FS1530-FL-1
49700-LF-NB	(pg. 98)	FS1530-1
49710	(pg. 98)	FS1530
49720	(pg. 98)	FS1530-FL
49720-LF	(pg. 98)	FS1530
49720-NB	(pg. 98)	FS1530-FL-1
49720-LF-NB	(pg. 98)	FS1530-1
49730	(pg. 98)	FS1530
49850	(pg. 80)	F1650-1
49870A	(pg. 64)	F1350-Y-36

FLOOR SINK OPTIONAL VARIATIONS

JOSAM			MIFAB
-2	Less grate	(pg. 365, 366)	-22
-3	Half grate	(pg. 365, 366)	-150
-4	3/4 grate	(pg. 365, 366)	-175
-5	Nickel bronze grate	(pg. 365, 366)	-1
-7	Full grate with 2 ½" center opening	(pg. 365, 366)	-51
-8	Depressed alum grate	.....	"X"
-10	Secured grate	(pg. 365, 366)	-6
-15	Stainless Steel rim & grate	(pg. 365, 366)	-3
-16	Grate w/ 4" dia. funnel	(pg. 365, 366)	0
-17	Grate w/ 6" dia. funnel	(pg. 365, 366)	0
-18	Grate w/ 4" x 9" funnel	(pg. 365, 366)	-G
-20	Solid NB cover	.....	"X"
-24	Chained grate	(pg. 365, 366)	-23
-30	SS sediment bucket	(pg. 365, 366)	-8
-31	Sediment bucket	(pg. 365, 366)	-5
-35	SS mesh lined bucket	(pg. 365, 366)	-88
-43	Internal dome strainer	(pg. 365, 366)	Std
-45	Less bottom dome strainer	.....	"X"
-51	All galvanized	(pg. 365, 366)	-13
-52	Painted inside & out	(pg. 365, 366)	Std
-55	Trap seal primer	(pg. 365, 366)	-7
-C	Membrane clamp	(pg. 365, 366)	-C
-X	Inside caulk outlet	(pg. 365, 366)	X
-Z	No hub outlet	(pg. 365, 366)	Std

STAINLESS STEEL DRAINAGE PRODUCTS

JOSAM		MIFAB
52010	(pg. 106)	FS1910-FL
52020	(pg. 43)	F1000-S10-3
52030	(pg. 106)	FS1920-FL
52040	(pg. 106)	FS1940-FL
52050	(pg. 106)	FS1940-FL
52060	(pg. 106)	FS1940-FL
52070	(pg. 106)	FS1940-FL
52080	(pg. 106)	FS1920-FL-C
52100	(pg. 106)	FS1940-FL-C
52120	(pg. 106)	FS1940-FL-C
52130	(pg. 43)	F1000-S6-3-28
52140	(pg. 43)	F1000-C-S6-3-28
52150	(pg. 168)	C1000-R-3-29
54100	(pg. 149)	R1320-28
54200	(pg. 37)	F1000-C-6-3-28
54210	(pg. 37)	F1000-C-8-3-28
54220	(pg. 37)	F1000-C-8-3-5-28
54230	(pg. 37)	F1000-C-8-3-28
54240	(pg. 37)	F1000-C-8-3-5-28
54250	(pg. 37)	F1000-C-10-3-28
54300	(pg. 84)	F1890
54400	(pg. 171)	C1000-TS-3-28

CLEANOUTS

JOSAM		MIFAB
55000	(pg. 172)	C1100-XR-4
55000-1	(pg. 168)	C1100-R-1
55000-5	(pg. 172)	C1100-XR-4
55000-1-SD	(pg. 172)	C1100-XR-1
55000-1-SQ	(pg. 170)	C1100-S-1
55000-1-12	(pg. 170)	C1100-T-1
55000-1-13	(pg. 171)	C1100-UR-1
56000	(pg. 168)	C1100-R
56000-12	(pg. 170)	C1100-T
56000-14	(pg. 169)	C1100-RC
56000-88	(pg. 324)	R-1
56010	(pg. 168)	C1100-R
56010-12	(pg. 170)	C1100-T
56010-14	(pg. 169)	C1100-RC
56020	(pg. 170)	C1100-S
56020-12	(pg. 171)	C1100-TS
56020-14	(pg. 169)	C1100-S-RC
56020-88	(pg. 324)	S-1
56030	(pg. 170)	C1100-S
56030-12	(pg. 171)	C1100-TS
56030-14	(pg. 169)	C1100-S-RC
56040	(pg. 172)	C1100-XR
56040-13	(pg. 171)	C1100-UR
56040-14	(pg. 170)	C1100-T
56040-88	(pg. 324)	XR-1
56050	(pg. 172)	C1100-XR
56050-13	(pg. 171)	C1100-UR
56050-14	(pg. 169)	C1100-RC
56060	(pg. 172)	C1100-XR
56060-14	(pg. 169)	C1100-RC
56070	(pg. 172)	C1100-XR
56070-14	(pg. 169)	C1100-RC
56670	(pg. 187)	C1500
57008-Z-CI	(pg. 172)	C1100-XR-4
57008-Z-1	(pg. 168)	C1100-R-1
57008-Z-1-SD	(pg. 172)	C1100-XR-1
57008-Z-1-SQ	(pg. 170)	C1100-S-1
57008-Z-1-12	(pg. 170)	C1100-T-1
57008-Z-LT	(pg. 325)	C1228-PB-50
58180	(pg. 182)	C1450
58190	(pg. 182)	C1450
58360	(pg. 175)	C1220
58370A	(pg. 168)	C1100-C-R*
58460A	(pg. 175)	C1220-C-R*
58460A-AE	(pg. 175)	C1220-C-R-15*
58500	(pg. 182)	C1450
58510	(pg. 184)	C1460
58540	(pg. 179)	C1430
58580	(pg. 176)	C1230-4
58580-1	(pg. 176)	C1230-1
58580-1-SD	(pg. 176)	C1230-1
58580-1-SQ	(pg. 170)	C1100-S-1
58600	(pg. 179)	C1400-RD
58600-CO	(pg. 179)	C1430-RD
58600-COT	(pg. 185)	C1460-RD
58600-PLG	(pg. 179)	C1430-RD
58610	(pg. 178)	C1400-R6
58610-CO	(pg. 178-179)	C1400-R6-1 & C1430
58610-COT	(pg. 178-184)	C1400-R6-1 & C1460
58620	(pg. 365)	-26
58630	(pg. 188)	FHA
58630-CO	(pg. 177-179)	C1300-R6 & C1430
58630-COT	(pg. 178-184)	C1400-R6-1 & C1460
58640	(pg. 178)	C1400-S
58640-CO	(pg. 178-179)	C1400-R6-1 & C1430
58640-COT	(pg. 178-184)	C1400-R6-1 & C1460
58650	(pg. 188)	UASS
58660	(pg. 177)	C1300-U
58665	(pg. 177)	C1300-US
58670	(pg. 187)	C1500
58680	(pg. 178)	C1300-MF
58700	(pg. 182)	C1450-R
58710	(pg. 183)	C1450-RD
58730	(pg. 183)	C1450-S
58740	(pg. 183)	C1450-S
58750	(pg. 184)	C1460-R
58760	(pg. 185)	C1460-S
58770	(pg. 185)	C1460-S
58790	(pg. 185)	C1460-RD
58800	(pg. 176)	C1230-S
58810	(pg. 176)	C1230-S
58820	(pg. 176)	C1230-S
58830	(pg. 176)	C1230-S
58850	(pg. 176, 178)	C1300-MF w/C1230
58860	(pg. 176, 178)	C1300-MF w/C1230
58890	(pg. 179)	C1430-RD
58900	(pg. 182)	C1450
58910	(pg. 184)	C1460

CLEANOUT OPTIONAL VARIATIONS

JOSAM			MIFAB
-1	Nickel bronze	(pg. 365, 366)	-1
-2	Polished bronze	(pg. 365, 366)	-2
-5	Ductile iron cover	(pg. 365, 366)	-4
-6	Square NB top	(pg. 365, 366)	S-1
-8	Square NB top	(pg. 365, 366)	S-1
-10	Scoriated cover	(pg. 365, 366)	std
-12	Top recessed for tile	(pg. 365, 366)	T-1
-14	Rnd NB terrazzo cover	(pg. 365, 366)	UR-1
-15	Rnd NB terrazzo cover	(pg. 365, 366)	UR-1
-14	Carpet Marker	(pg. 365, 366)	RC-1
-15	V&al proof	(pg. 365, 366)	-6
-17	Longer screw than 3 ½"	(pg. 365, 366)	-87-19
-20	Raised head br. plug	(pg. 365, 366)	-34B
-22	Taper thread br. plug	(pg. 365, 366)	-34B
-24	Spanner wrench	(pg. 365, 366)	H-1042
-26	Gasketed cover	(pg. 365, 366)	Std
-31	All galvanized	(pg. 365, 366)	-13
-41	Membrane clamp & flange	(pg. 365, 366)	-C
-E	Extension	(pg. 365, 366)	-15
-F	Anchor flange	(pg. 365, 366)	Std
-WF	Wide flange	(pg. 365, 366)	Std
-X	Inside caulk outlet	(pg. 365, 366)	X
-Y	Push on outlet	(pg. 365, 366)	P
-Z	No hub outlet	(pg. 365, 366)	Std

INTERCEPTORS

JOSAM		MIFAB
60000A	(pg. 208)	MI-G-SDH
60010A	(pg. 208)	MI-G-L-SDH
60030A	(pg. 208, 209)	MI-G-SDH w/ MI-CSD
60040A	(pg. 208, 209)	MI-G-SDH w/ MI-CSD-EN
60100A	(pg. 205)	MI-G
60100H	(pg. 205)	MI-G
60100H-GRD	(pg. 218)	MI-G-AD
60100H-EXT	(pg. 205)	MI-G-C
60100H-ET	(pg. 205, 209)	MI-G & MI-CS
60100H-RT	(pg. 205, 209)	MI-G & MI-CS
60100A-EGLD	(pg. 219)	MI-E-G
60100A	(pg. 205)	MI-G-E
60100-SA	(pg. 208)	MI-G-SDH
60100-SA-ET	(pg. 208, 209)	MI-G-SDH & MI-CSD
60100-SA-RT	(pg. 208, 209)	MI-G-SDH & MI-CSD
60100-50A	(pg. 208)	MI-G-SDH
60110A	(pg. 205)	MI-G-L
60110-50A	(pg. 208)	MI-G-L-SDH
60115A	(pg. 205)	MI-G-L
60117A	(pg. 205)	MI-G-L
60115-SA	(pg. 208)	MI-G-L-SDH
60120A	(pg. 205)	MI-G-C
60130A	(pg. 205, 209)	MI-G w/ MI-CS
60130-50A	(pg. 208, 209)	MI-G-SDH w/ MI-CSD
60140A	(pg. 205, 209)	MI-G w/ MI-CS-EN
60140-50A	(pg. 208, 209)	MI-G-SDH w/ MI-CSD-EN
60200A	(pg. 206)	XL-MI-G-C
60210A	(pg. 206)	XL-MI-G
60210A-SAP	(pg. 206)	XL-MI-G-HLA
60210A-EXT	(pg. 206)	XL-MI-G-C
60210A-ISI	(pg. 206)	XL-MI-G-SB
60210A-EGLD	(pg. 206)	XL-MI-E-G
60100A	(pg. 206)	XL-MI-E-G
60300	(pg. 218)	MI-G-AD
60300A	(pg. 218)	MI-G-AD
60500A	(pg. 210)	MI-O
60500B	(pg. 210)	MI-O
60500B-EXT	(pg. 210)	MI-O-"C"
60500-EST	(pg. 211)	MI-O-HU
60520A	(pg. 210)	MI-O-C
60600A	(pg. 210)	MI-O-C
60610A	(pg. 210)	MI-O

Design and dimensions are subject to modification. Prices do not include applicable taxes. Visit **www.mifab.com** for the most recent product information.
MIFAB®, Inc., 1321 West 119th Street, Chicago, Illinois 60643-5109, USA Toll Free: 1-800-465-2736 • Fax: 1-773-341-3049
sales@mifab.com • Canada Toll Free: 1-800-387-3880
All sales subject to MIFAB's® Terms & Warranties. Please refer to inside front cover.

60610A-EXT	(pg. 211)	MI-O-HU-"C"
60610-EST	(pg. 211)	MI-O-HU
60810	(pg. 212)	MI-OS
61000	(pg. 212)	MI-HAIR
61020	(pg. 212)	MI-SOLID-LB
61030	(pg. 212)	MI-SOLID-S
61040	(pg. 212)	MI-SOLID-L
61040A	(pg. 213)	MI-SOLID-TA
61070	(pg. 212)	MI-SOLID-S
61080	(pg. 212)	MI-SOLID-S
61800	(pg. 216)	MI-LINT
61850	(pg. 212)	MI-OS
GI2000	(pg. 218)	MI-G-AD
CEGOLD-2000	(pg. 201)	HLA
EGOLD-1000	(pg. 201)	HLA

INTERCEPTOR OPTIONAL VARIATIONS

JOSAM			MIFAB
-4	All galvanized	(pg. 365, 366)	-13
-15	Stainless steel basket	(pg. 365, 366)	-SSB
-30	ARE coating, inside/out	(pg. 365, 366)	"X"
-31	ARE coating, inside	(pg. 365, 366)	"X"
-32	ARE coating, outside	(pg. 365, 366)	"X"
-40	Cover recessed for tile	(pg. 365, 366)	-TL
-41	Extension	(pg. 365, 366)	-C
-61	Anchor flange & membrane clamp	(pg. 365, 366)	-FLC
-62	4" inlet & outlet	(pg. 365, 366)	"X"
-65	Hub inlet, spigot outlet, 2"	(pg. 365, 366)	"X"
-66	Hub inlet, spigot outlet, 3"	(pg. 365, 366)	"X"
-67	Hub inlet, spigot outlet, 4"	(pg. 365, 366)	"X"
-68	3" inlet & outlet	(pg. 365, 366)	"X"
-80	Sediment bucket	(pg. 365, 366)	-SB
-85	Enzymatic port	(pg. 365, 366)	"X"

BACKWATER VALVES

JOSAM		MIFAB
67100A	(pg. 285)	BV1260
67350	(pg. 287)	BV1300
67360-DH	(pg. 287)	BV1300
67360	(pg. 287)	BV1300
67400	(pg. 284)	BV1000
67500	(pg. 284)	BV1000
67520	(pg. 284)	BV1000
67600	(pg. 284)	BV1000
67650	(pg. 285)	BV1210
67720	(pg. 286)	BV1280
67800	(pg. 286)	BV1280

BACKWATER VALVE OPTIONAL VARIATIONS

JOSAM			MIFAB
-5O	All galvanized	(pg. 365, 366)	-13
-28	12" CI extension	(pg. 365, 366)	"X"
-29	24" CI extension	(pg. 365, 366)	"X"

HYDRANTS

JOSAM		MIFAB
71000	(pg. 274)	MHY-26
71020	(pg. 275)	MHY-35
71050	(pg. 274)	MHY-10
71070	(pg. 275)	MHY-30
71400	(pg. 281)	MHY-68
71450	(pg. 281)	MHY-68
71600	(pg. 280)	MHY-60
71650	(pg. 276)	MHY-45

HYDRANT OPTIONAL VARIATIONS

JOSAM			MIFAB
-72	Wall clamp	(pg. 365, 366)	-WC
-73	Solder inlet	(pg. 365, 366)	Std
-91	1" thr. Outlet	(pg. 365, 366)	-0
-95	Cylinder key lock	(pg. 365, 366)	-K
-97	1/8" drain hole tapped in box	(pg. 365, 366)	-9

WATER HAMMER ARRESTORS

JOSAM		MIFAB
75000	(pg. 314)	WHB
75001A	(pg. 314)	WHB-A
75002B	(pg. 314)	WHB-B
75003C	(pg. 314)	WHB-C
75004D	(pg. 314)	WHB-D
75005E	(pg. 314)	WHB-E
75006F	(pg. 314)	WHB-F
75000-S	(pg. 313)	MWH
75001-S	(pg. 313)	MWH-A
75002-S	(pg. 313)	MWH-B
75003-S	(pg. 313)	MWH-C
75004-S	(pg. 313)	MWH-D
75005-S	(pg. 313)	MWH-E
75006-S	(pg. 313)	MWH-F

TRENCH DRAINS

JOSAM		MIFAB
76000	(pg. 91)	T1320-FL-4
76010	(pg. 91)	T1350-FL-4
76300	(pg. 90)	T1200-4
76400	(pg. 90)	T1200-F-4
76500	(pg. 90)	T1200-4
76501	(pg. 90)	T1200-F-4
76600	(pg. 90)	T1200-4
76700	(pg. 90)	T1200
76701	(pg. 90)	T1200-F-4
76800	(pg. 90)	T1200-F2-4

TRENCH DRAIN OPTIONAL VARIATIONS

JOSAM			MIFAB
-1	NB veneer	(pg. 365, 366)	-1
-2	PB veneer	(pg. 365, 366)	-1
-7	DI grate	(pg. 365, 366)	-4
-20	V&al proof	(pg. 365, 366)	-6
-30	Anchor flange & membrane clamp	(pg. 365, 366)	-FLC
-40	All galvanized	(pg. 365, 366)	-13
-65	Backwater valve	(pg. 365, 366)	-8
-70	Sediment bucket	(pg. 365, 366)	-5
-X	Inside caulk outlet	(pg. 365, 366)	X

TRAP SEAL PRIMERS & SPECIALITIES

JOSAM		MIFAB
85220	(pg. 149)	R1320T
85800	(pg. 81)	F1760-FL
85810	(pg. 81)	F1760-FL
85903-Z	(pg. 56)	F1240
88100	(pg. 289)	MI-950
88210	(pg. 289)	MI-950-F
88250	(pg. 296)	MI-TSP-2
88250-90	(pg. 296)	MI-TSP-1
88250-91	(pg. 296)	MI-TSP-3
88300	(pg. 291)	MR-500-NPB & MI-DU-500
88350	(pg. 288)	MI-850
88400	(pg. 307)	MI-600-50
88450	(pg. 307)	MI-600-50
88550	.....	"X"
88560	(pg. 288)	MI-830
88600	(pg. 288)	MI-830
88900	(pg. 290)	MI-CAG-NH
88910	(pg. 290)	MI-CAG-T
88950	(pg. 290)	MI-GRILL
88970	(pg. 290)	MI-GRILL

Note: This guide is prepared to assist in determining the MIFAB Catalog number which is similar to the Josam catalog number referred to. Due to the simplified modular design of MIFAB products, this index indicates the product which is closest in design, based on function: eg. Free Area, Loading Rating, Depth, Material etc.

"X" Contact MIFAB

J R SMITH - MIFAB CROSS REFERENCE

WATER CLOSET CARRIERS

J R SMITH		MIFAB
115	(pg. 236)	MC-10-EXT
0115D	(pg. 236)	MC-10D-EXT-HS
0115L	(pg. 236)	MC-10L-EXT-HS
0115R	(pg. 236)	MC-10R-EXT-HS
0115DY	(pg. 236)	MC-10D-EXT
0115LY	(pg. 236)	MC-10L-EXT
0115RY	(pg. 236)	MC-10R-EXT
175	(pg. 244)	MC-13
0175D	(pg. 245)	MC-13D-HS
0175L	(pg. 245)	MC-13L-HS
0175R	(pg. 245)	MC-13R-HS
0175DY	(pg. 244)	MC-13D
0175LY	(pg. 244)	MC-13L
0175RY	(pg. 244)	MC-13R
185	(pg. 245)	MC-13-2-HS
0185D	(pg. 245)	MC-13D-2-HS
0185Y	(pg. 244)	MC-13-2
0185DY	(pg. 244)	MC-13D-2
208	(pg. 235)	MC-10
0208DY	(pg. 235)	MC-10D
0208LY	(pg. 235)	MC-10L
0208RY	(pg. 235)	MC-10R
209	(pg. 238)	MC-10-27
0209DY	(pg. 238)	MC-10D-27
0209LY	(pg. 238)	MC-10L-27
0209RY	(pg. 238)	MC-10R-27
210	(pg. 235)	MC-10
0210D	(pg. 237)	MC-10D-HS
0210L	(pg. 237)	MC-10L-HS
0210R	(pg. 237)	MC-10R-HS
0210DY	(pg. 235)	MC-10D
0210LY	(pg. 235)	MC-10L
0211LY	(pg. 235)	MC-10L
0211RY	(pg. 235)	MC-10R
0211DY	(pg. 235)	MC-10D
0221LY	(pg. 239)	MC-10L-27-37
0221RY	(pg. 239)	MC-10R-27-37
0221DY	(pg. 239)	MC-10D-27-37
0210RY	(pg. 235)	MC-10R

0210LY-M54-XK	(pg. 241)	MC-10L-HDX
0210LY-M54-XX	(pg. 235)	MC-10L-HD-750
0210RY-M54-XK	(pg. 241)	MC-10R-HDX
0210RY-M54-XX	(pg. 235)	MC-10R-HD-750
0210DY-M54-XK	(pg. 241)	MC-10D-HDX
0210DY-M54-XX	(pg. 235)	MC-10D-HD-750
219	(pg. 239)	MC-10-27-37
0219DY	(pg. 239)	MC-10D-27-37
0219LY	(pg. 239)	MC-10L-27-37
0219RY	(pg. 239)	MC-10R-27-37
220	(pg. 239)	MC-10-27-37
0220D	(pg. 240)	MC-10D-27-37-HS
0220L	(pg. 240)	MC-10L-27-37-HS
0220R	(pg. 240)	MC-10R-27-37-HS
0220DY	(pg. 239)	MC-10D-27-37
0220LY	(pg. 239)	MC-10L-27-37
0220RY	(pg. 239)	MC-10R-27-37
0220LY-M54-XK	(pg. 239)	MC-10L-27-37-HDX
0220LY-M54-XX	(pg. 239)	MC-10L-27-37-HD-750
0220LY-M58/54-XK	(pg. 239)	MC-10L-27-37-HDX
0220LY-M58/54-XX	(pg. 239)	MC-10L-27-37-HD-750
0220RY-M54-XK	(pg. 239)	MC-10R-27-37-HDX
0220RY-M54-XX	(pg. 239)	MC-10R-27-37-HD-750
0220RY-M58/54-XK	(pg. 239)	MC-10R-27-37-HDX
0220RY-M58/54-XX	(pg. 239)	MC-10R-27-37-HD-750
0220DY-M54-XK	(pg. 239)	MC-10D-27-37-HDX
0220DY-M54-XX	(pg. 239)	MC-10D-27-37-HD-750
0220DY-M58/54-XK	(pg. 239)	MC-10D-27-37-HDX
0220DY-M58/54-XX	(pg. 239)	MC-10D-27-37-HD-750
230	(pg. 243)	MC-12-HS*
0230D	(pg. 243)	MC-12D-HS*
0230Y	(pg. 242)	MC-12*
0230DY	(pg. 242)	MC-12D*
0230Y-M54-XK	(pg. 242)	MC-12-HDX
0230Y-M54-XX	(pg. 242)	MC-12-HD-750
0230Y-M58/54-XK	(pg. 242)	MC-12-HDX
0230Y-M58/54-XX	(pg. 242)	MC-12-HD-750
0230DY-M54-XK	(pg. 242)	MC-12D-HDX
0230DY-M54-XX	(pg. 242)	MC-12D-HD-750
0230DY-M58/54-XK	(pg. 242)	MC-12D-HDX
0230DY-M58/54-XX	(pg. 242)	MC-12D-HD-750
240	(pg. 244)	MC-13
0240D	(pg. 245)	MC-13D-HS
0240L	(pg. 245)	MC-13L-HS
0240R	(pg. 245)	MC-13R-HS
0240DY	(pg. 244)	MC-13D
0240LY	(pg. 244)	MC-13L
0240RY	(pg. 244)	MC-13R
0240LY-M54-XK	(pg. 244)	MC-13L-HDX
0240LY-M54-XX	(pg. 244)	MC-13L-HD-750
0240LY-M58/54-XK	(pg. 244)	MC-13L-HDX
0240LY-M58/54-XX	(pg. 244)	MC-13L-HD-750
0240RY-M54-XK	(pg. 244)	MC-13R-HDX
0240RY-M54-XX	(pg. 244)	MC-13R-HD-750
0240RY-M58/54-XK	(pg. 244)	MC-13R-HDX
0240RY-M58/54-XX	(pg. 244)	MC-13R-HD-750
0240DY-M54-XK	(pg. 244)	MC-13D-HDX
0240DY-M54-XX	(pg. 244)	MC-13D-HD-750
0240DY-M58/54-XK	(pg. 244)	MC-13D-HDX
0240DY-M58/54-XX	(pg. 244)	MC-13D-HD-750
250	(pg. 245)	MC-13-2-HS
0250D	(pg. 245)	MC-13D-2-HS
0250Y	(pg. 244)	MC-13-2
0250DY	(pg. 244)	MC-13D-2
0250Y-M54-XK	(pg. 244)	MC-13-2-HDX
0250Y-M54-XX	(pg. 244)	MC-13-2-HD-750
0250Y-M58/54-XK	(pg. 244)	MC-13-2-HDX
0250Y-M58/54-XX	(pg. 244)	MC-13-2-HD-750
0250DY-M54-XK	(pg. 244)	MC-13D-2-HDX
0250DY-M54-XX	(pg. 244)	MC-13D-2-HD-750
0250DY-M58/54-XK	(pg. 244)	MC-13D-2-HDX
0250DY-M58/54-XX	(pg. 244)	MC-13D-2-HD-750
260	(pg. 243)	MC-12-HS*
0260D	(pg. 243)	MC-12D-HS*
270	(pg. 245)	MC-13-HS
0270D	(pg. 245)	MC-13D-HS
0270L	(pg. 245)	MC-13L-HS
0270R	(pg. 245)	MC-13R-HS
280	(pg. 245)	MC-13-2-HS
0280D	(pg. 245)	MC-13D-2-HS
0280L	(pg. 245)	MC-13L-HS
0280R	(pg. 245)	MC-13R-HS
310	(pg. 235)	MC-10
0310D	(pg. 237)	MC-10D-HS
0310L	(pg. 237)	MC-10L-HS
0310R	(pg. 237)	MC-10R-HS
0310DY	(pg. 235)	MC-10D
0310LY	(pg. 235)	MC-10L
0310RY	(pg. 235)	MC-10R
315	(pg. 236)	MC-10-EXT
0315D	(pg. 236)	MC-10D-EXT-HS
0315L	(pg. 236)	MC-10L-EXT-HS
0315R	(pg. 236)	MC-10R-EXT-HS
0315DY	(pg. 236)	MC-10D-EXT
0315LY	(pg. 236)	MC-10L-EXT
0315RY	(pg. 236)	MC-10R-EXT
320	(pg. 239)	MC-10-27-37
0320D	(pg. 240)	MC-10D-27-37-HS
0320L	(pg. 240)	MC-10L-27-37-HS
0320R	(pg. 240)	MC-10R-27-37-HS
0320DY	(pg. 239)	MC-10D-27-37
0320LY	(pg. 239)	MC-10L-27-37
0320RY	(pg. 239)	MC-10R-27-37
330	(pg. 243)	MC-12-HS*
0330D	(pg. 243)	MC-12D-HS*
0330Y	(pg. 242)	MC-12*
0330DY	(pg. 242)	MC-12D*
340	(pg. 244)	MC-13
0340D	(pg. 245)	MC-13D-HS
0340L	(pg. 245)	MC-13L-HS
0340R	(pg. 245)	MC-13R-HS
0340DY	(pg. 244)	MC-13D
0340LY	(pg. 244)	MC-13L
0340RY	(pg. 244)	MC-13R
350	(pg. 245)	MC-13-2-HS
0350D	(pg. 245)	MC-13D-2-HS
0350Y	(pg. 244)	MC-13-2
0350DY	(pg. 244)	MC-13D-2
360	(pg. 243)	MC-12-HS*
0360D	(pg. 243)	MC-12D-HS*
370	(pg. 245)	MC-13-HS
0370D	(pg. 245)	MC-13D-HS
0370L	(pg. 245)	MC-13L-HS
0370R	(pg. 245)	MC-13R-HS
375	(pg. 244)	MC-13
0375D	(pg. 245)	MC-13D-HS
0375L	(pg. 245)	MC-13L-HS
0375R	(pg. 245)	MC-13R-HS
0375DY	(pg. 244)	MC-13D
0375LY	(pg. 244)	MC-13L
0375RY	(pg. 244)	MC-13R
380	(pg. 245)	MC-13-HS
0380D	(pg. 245)	MC-13D-HS
0380L	(pg. 245)	MC-13L-HS
0380R	(pg. 245)	MC-13R-HS
385	(pg. 245)	MC-13-2-HS
0385D	(pg. 245)	MC-13D-2-HS
0385Y	(pg. 244)	MC-13-2
0385DY	(pg. 244)	MC-13D-2
410	(pg. 248)	MC-15
0410D	(pg. 249)	MC-15D-HS
0410L	(pg. 249)	MC-15L-HS
0410R	(pg. 249)	MC-15R-HS
0410DY	(pg. 248)	MC-15D
0410LY	(pg. 248)	MC-15L
0410RY	(pg. 248)	MC-15R
411	(pg. 249)	MC-15-HS
0411D	(pg. 249)	MC-15D-HS
0411L	(pg. 249)	MC-15L-26-HS
0411R	(pg. 249)	MC-15R-25-HS
0411DY	(pg. 248)	MC-15D
0411LY	(pg. 248)	MC-15L-26
0411RY	(pg. 248)	MC-15R-25
413	(pg. 248)	MC-15
0413DSW	(pg. 248)	MC-15D
0413DY	(pg. 248)	MC-15D
0413LSW	(pg. 248)	MC-15L
0413LY	(pg. 248)	MC-15L
0413RSW	(pg. 248)	MC-15R
0413RY	(pg. 248)	MC-15R
415	(pg. 248)	MC-15
0415D	(pg. 249)	MC-15D-HS
0415L	(pg. 249)	MC-15L-HS
0415R	(pg. 249)	MC-15R-HS

WATER CLOSET CARRIERS CONTINUED

JR SMITH		MIFAB
0415DY	(pg. 248)	MC-15D
0415LY	(pg. 248)	MC-15L
0415RY	(pg. 248)	MC-15R
416	(pg. 249)	MC-15-HS
0416D	(pg. 249)	MC-15D-HS
0416L	(pg. 249)	MC-15L-26-HS
0416R	(pg. 249)	MC-15R-25-HS
0416DY	(pg. 248)	MC-15D
0416LY	(pg. 248)	MC-15L-26
0416RY	(pg. 248)	MC-15R-25
417	(pg. 248)	MC-15
0417D	(pg. 249)	MC-15D-HS
0417L	(pg. 249)	MC-15L-HS
0417R	(pg. 249)	MC-15R-HS
0417DY	(pg. 248)	MC-15D
0417DYS	(pg. 248)	MC-15D
0417DYT	(pg. 248)	MC-15D
0417LY	(pg. 248)	MC-15L
0417LYS	(pg. 248)	MC-15L
0417LYT	(pg. 248)	MC-15L
0417RY	(pg. 248)	MC-15R
0417RYS	(pg. 248)	MC-15R
0417RYT	(pg. 248)	MC-15R
419	(pg. 249)	MC-15-HS
0419D	(pg. 249)	MC-15D-HS
0419L	(pg. 249)	MC-15L-26-HS
0419R	(pg. 249)	MC-15R-25-HS
0419DY	(pg. 248)	MC-15D
0419DYS	(pg. 248)	MC-15D
0419DYT	(pg. 248)	MC-15D
0419LY	(pg. 248)	MC-15L-26
0419LYS	(pg. 248)	MC-15L-26
0419LYT	(pg. 248)	MC-15L-26
0419RY	(pg. 248)	MC-15R-25
0419RYS	(pg. 248)	MC-15R-25
0419RYT	(pg. 248)	MC-15R-25
429	(pg. 248)	MC-15-31
430	(pg. 248)	MC-15
0430D	(pg. 249)	MC-15D-HS
0430L	(pg. 249)	MC-15L-HS
0430R	(pg. 249)	MC-15R-HS
0430DY	(pg. 248)	MC-15D
0430LY	(pg. 248)	MC-15L
0430RY	(pg. 248)	MC-15R
431	(pg. 249)	MC-15-HS
0431D	(pg. 249)	MC-15D-HS
0431L	(pg. 249)	MC-15L-26-HS
0431R	(pg. 249)	MC-15R-25-HS
0431DY	(pg. 248)	MC-15D
0431LY	(pg. 248)	MC-15L-26
0431RY	(pg. 248)	MC-15R-25
437	(pg. 248)	MC-15
0437L	(pg. 249)	MC-15L-HS
0437R	(pg. 249)	MC-15R-HS
0437DY	(pg. 248)	MC-15D
0437LY	(pg. 248)	MC-15L
0437RY	(pg. 248)	MC-15R
440	(pg. 247)	MC-14-4-V2-HS
0440Y	(pg. 246)	MC-14-4-V2
444	(pg. 251)	MC-27-HS
0444Y	(pg. 251)	MC-27
447	(pg. 247)	MC-14-4-V2-HS
0447Y	(pg. 246)	MC-14-4-V2
450	(pg. 247)	MC-14-4-V4-HS
0450Y	(pg. 246)	MC-14-4-V4
457	(pg. 247)	MC-14-4-V4-HS
0457Y	(pg. 246)	MC-14-4-V4
480	(pg. 247)	MC-14-4-V2-HS
0480Y	(pg. 246)	MC-14-4-V2
484	(pg. 251)	MC-27-HS
0484Y	(pg. 251)	MC-27
487	(pg. 247)	MC-14-4-V2-HS
0487Y	(pg. 246)	MC-14-4-V2
490	(pg. 247)	MC-14-4-V4-HS
0490Y	(pg. 246)	MC-14-4-V4
497	(pg. 247)	MC-14-4-V4-HS

Design and dimensions are subject to modification. Prices do not include applicable taxes. Visit **www.mifab.com** for the most recent product information.
MIFAB®, Inc., 1321 West 119th Street, Chicago, Illinois 60643-5109, USA Toll Free: 1-800-465-2736 • Fax: 1-773-341-3049
All sales subject to MIFAB's® Terms & Warranties. Please refer to inside front cover. sales@mifab.com • Canada Toll Free: 1-800-387-3880

0497Y	(pg. 246)	MC-14-4-V4
532	(pg. 250)	MC-25-3-2-HS
0532F	(pg. 250)	MC-25-3-2-HS
0532FY	(pg. 250)	MC-25-3-2
0532Y	(pg. 250)	MC-25-3-2
533	(pg. 250)	MC-25-3-4-HS
0533F	(pg. 250)	MC-25-3-4-HS
0533FY	(pg. 250)	MC-25-3-4
0533Y	(pg. 250)	MC-25-3-4
542	(pg. 250)	MC-25-4-2-HS
0542F	(pg. 250)	MC-25-4-2-HS
0542FY	(pg. 250)	MC-25-4-2
0542Y	(pg. 250)	MC-25-4-2
544	(pg. 250)	MC-25-4-4-HS
0544D	(pg. 250)	MC-25-4-4-HS
0544DY	(pg. 250)	MC-25-4D-RV2
0544F	(pg. 250)	MC-25-4D-RV2-HS
0544FD	(pg. 250)	MC-25-4D-RV2-HS
0544FDY	(pg. 250)	MC-25-4D-RV2
0544FY	(pg. 250)	MC-25-4-4
0544Y	(pg. 250)	MC-25-4-4
0548D	(pg. 250)	MC-25-4D-RV2-HS
0548D3	(pg. 250)	MC-25-4D-RV2-HS
0548DP	(pg. 250)	MC-25-4D-RV2-HS
0548F-3	(pg. 250)	MC-24
0548F-4	(pg. 250)	MC-24
0548FD	(pg. 250)	MC-24
0548FD3	(pg. 250)	MC-24
0548FDP	(pg. 250)	MC-25-4D-RV2-HS
0548FP	(pg. 250)	MC-24
0548P	(pg. 250)	MC-25-3-2-HS
0548-3	(pg. 250)	MC-25-3-2-HS
0548-4	(pg. 250)	MC-25-4-2-HS
550	(pg. 249)	MC-15-HS
600	(pg. 250)	MC-21-T
620	(pg. 250)	MC-22-T

*** MC-14 or MC-15 are recommended alternatives. Less pipe space, lower cost and fewer parts**

"X" Contact MIFAB

WATER CLOSET OPTIONAL VARIATIONS

JR SMITH		MIFAB
-G	(pg. 365, 366)	-17
-M12	(pg. 365, 366)	-20
-M13	(pg. 365, 366)	-1
-M17	(pg. 365, 366)	-31
-M40	(pg. 365, 366)	-10
-M50	(pg. 365, 366)	Standard
-M51	(pg. 365, 366)	Standard
-M54	(pg. 365, 366)	Standard
-M73	.....	X"
-M74	.....	X"
-N1	.....	X"
-N2	(pg. 365, 366)	-27
-N15	(pg. 365, 366)	-27
-U	(pg. 365, 366)	-14
-XK	(pg. 365, 366)	-HDX
-XX	(pg. 365, 366)	-HD-750
-2	.....	X"
-95	(pg. 365, 366)	-13
-99	(pg. 365, 366)	-19

LAVATORY, URINAL AND SINK CARRIERS

JR SMITH		MIFAB
609	(pg. 264)	MC-61-N
610	(pg. 264)	MC-61-N
611	(pg. 264)	MC-62-4-V4
614	(pg. 252)	MC-31
615	(pg. 252)	MC-32
616	(pg. 252)	MC-31
617	(pg. 252)	MC-32
622	(pg. 252)	MC-32
623	(pg. 252)	MC-31
624	(pg. 252)	MC-32
628	(pg. 252)	MC-32
629	(pg. 264)	MC-61-T
630	(pg. 264)	MC-61-T
631	(pg. 250)	MC-25-4-4
632	(pg. 250)	MC-25-4-2
633	(pg. 250)	MC-24
634	(pg. 252)	MC-31
635	(pg. 252)	MC-32
636	(pg. 252)	MC-31
637	(pg. 252)	MC-32
642	(pg. 252)	MC-32
643	(pg. 252)	MC-31
644	(pg. 252)	MC-32
648	(pg. 252)	MC-32
650	(pg. 251)	MC-28-HS
0650Y	(pg. 251)	MC-28
651	(pg. 251)	MC-28-27-HS
0651Y	(pg. 251)	MC-28-27
660	(pg. 251)	MC-27
661	(pg. 251)	MC-28-27
672	(pg. 251)	MC-26-HS
0672Y	(pg. 251)	MC-26
673	(pg. 248)	MC-15
674	(pg. 251)	MC-26-HS
0674Y	(pg. 251)	MC-26
0675 to 0689	(pg. 248)	MC-15
700	(pg. 257)	MC-41-R
0700D	(pg. 259)	MC-41D-R
0700DE	(pg. 259)	MC-41D-R
0700E	(pg. 257)	MC-41-R
0700-27	(pg. 260)	MC-42-R
0700-27-M31	(pg. 259)	MC-42
0700D-27-M31	(pg. 260)	MC-42D
0700-M31	(pg. 256)	MC-41
710	(pg. 258)	MC-41-TR
0710D	(pg. 258)	MC-41D-TR
0710-27	(pg. 258)	MC-42-TR
0710D-27	(pg. 258)	MC-42D-TR
0710DE	(pg. 258)	MC-41D-TR
0710E	(pg. 258)	MC-41-TR
720	(pg. 262)	MC-53
0720E	(pg. 262)	MC-53-E
722	(pg. 261)	MC-51
0722E	(pg. 261)	MC-51-E2
723	(pg. 261)	MC-51-LP
0723E	(pg. 262)	MC-51-LP-E2
727	(pg. 261)	MC-51
0727E	(pg. 261)	MC-51-E2
728	(pg. 261)	MC-51
0728E	(pg. 261)	MC-51-E2
750	(pg. 255)	MC-40
0750D	(pg. 255)	MC-40D
752	(pg. 255)	MC-40
0752D	(pg. 255)	MC-40D
760	(pg. 255)	MC-40
0760D	(pg. 255)	MC-40D
762	(pg. 255)	MC-40
0762D	(pg. 255)	MC-40D
770	(pg. 263)	MC-55
772	(pg. 263)	MC-55
780	(pg. 263)	MC-55
782	(pg. 263)	MC-55
790	(pg. 264)	MC-56-LP
792	(pg. 264)	MC-56-LP
793	(pg. 261)	MC-51
800	(pg. 252)	MC-31
801	(pg. 252)	MC-31
0801D	(pg. 252)	MC-31D
805	(pg. 252)	MC-32
823	(pg. 252)	MC-31-SP
824	(pg. 252)	MC-31-SP
825	(pg. 254)	MC-38D
826	(pg. 254)	MC-36
827	(pg. 254)	MC-38D
828	(pg. 254)	MC-36
830	(pg. 252)	MC-32
831	(pg. 252)	MC-32
834	(pg. 252)	MC-32
844	(pg. 255)	MC-31
870	(pg. 255)	MC-40
0870D	(pg. 255)	MC-40D
871	(pg. 255)	MC-40
0871D	(pg. 255)	MC-40D
876	(pg. 255)	MC-40
913	(pg. 264)	MC-61-T
914	(pg. 264)	MC-61-T
915	(pg. 264)	MC-62-4-V4-HS
0915-1	(pg. 264)	MC-62-4-V2-HS
0915Y	(pg. 264)	MC-62-4-V2
0915Y2	(pg. 264)	MC-62-4-V2
0915Y3	(pg. 264)	MC-62-4-V3
0915Y4	(pg. 264)	MC-62-4-V2
0915Y5	(pg. 264)	MC-62-4-V4
923	(pg. 264)	MC-61-T
924	(pg. 264)	MC-61-T
925	(pg. 264)	MC-62-4-V4-HS
0925-1	(pg. 264)	MC-62-4-V2-HS
0925Y	(pg. 264)	MC-62-4-V2
0925Y2	(pg. 264)	MC-62-4-V2
0925Y3	(pg. 264)	MC-62-4-V3
0925Y4	(pg. 264)	MC-62-4-V2
0925Y5	(pg. 264)	MC-62-4-V4

LAVATORY, URINAL & CARRIER OPTIONAL VARIATIONS

JR SMITH		MIFAB
-D	(pg. 365, 366)	-D
-E	(pg. 365, 366)	-E2
-E4	(pg. 365, 366)	-E4
-E6	(pg. 365, 366)	-E6
-KF	(pg. 365, 366)	-K
-KW	(pg. 365, 366)	-G
-M11	(pg. 365, 366)	-B
-M24	.....	X"
-M30	.....	X"
-M31	(pg. 365, 366)	Std.
-M40	.....	X"
-M51	.....	X"
-N	.....	X"
-U	(pg. 365, 366)	-14
-Z	.....	X"
-27	(pg. 365, 366)	Std.

ROOF DRAINS

JR SMITH		MIFAB
1001	(pg. 154)	R1810w/A2-PD
1002	(pg. 154)	R1810
1005	(pg. 146)	R1200-SR
1010	(pg. 127)	R1200
1010-C	(pg. 127)	R1200-U
1010-C-CID	(pg. 127)	R1200-M-U
1010-CID	(pg. 127)	R1200-M
1010 DEK	(pg. 127)	R1200-B-E
1010-R-C	(pg. 127)	R1200-B-U
1010-R-C-CID	(pg. 127)	R1200-M-B-U
1010-10"	(pg. 142)	R1260
DX1010	(pg. 137)	R1200-Z
1011	(pg. 130)	R1200-G
1015	(pg. 128)	R1200-E
1015-C	(pg. 128)	R1200-EU
1015-C-CID	(pg. 128)	R1200-M-EU
1015-R-C	(pg. 128)	R1200-EU
1015-R-C-CID	(pg. 128)	R1200-M-EU
1016	(pg. 130)	R1200-G-C
1017	(pg. 131)	R1200-JC
1018	(pg. 131)	R1200-JC-Z
1019	(pg. 130)	R1200-G-Z
1020	(pg. 138)	R1200-90
1070	(pg. 137)	R1200-W
1074	(pg. 137)	R1200-W-E
1080	(pg. 135)	R1200-R
1083	(pg. 130)	R1200-F
1084	(pg. 130)	R1200-F
1085	(pg. 130)	R1200-F
1088	(pg. 130)	R1200-F-90
1089	(pg. 130)	R1200-F-90

DX1240	(pg. 57)	F1320-Y-14-Z
DX1250	(pg. 56)	F1300-Y-14-Z
1310	(pg. 140)	R1220
1320	(pg. 140)	R1220-90
1330	(pg. 122)	R1100
1340	(pg. 126)	R1100-90
1409	(pg. 133)	R1200-PR15-J
1410	(pg. 133)	R1200-PR
1415	(pg. 133)	R1200-PR15-E-U
1416	(pg. 65)	F1360-C-Y-14*
1419	(pg. 133)	R1200-PR15-J-Z
1420	(pg. 133)	R1200-PR-90
1422	(pg. 133)	R1200-PR
1425	(pg. 133)	R1200-PR15-90
1440	(pg. 133)	R1200-PR
1450	(pg. 141)	R1220-PR
1460	(pg. 141)	R1200-PR-90
1470	(pg. 125)	R1100-PR
1472	(pg. 125)	R1100-PR-4
1480	(pg. 125)	R1100-PR-90
1482	(pg. 125)	R1100-PR-4-90
1510	(pg. 148)	R1300T
1520	(pg. 149)	R1320T
1530	(pg. 148)	R1310T
1540	(pg. 149)	R1330T
1560	(pg. 148)	R1300T
1570	(pg. 148)	R1310T
1580	(pg. 148)	R1300T
1605	(pg. 146)	R1100-SR
1610	(pg. 150)	R1400-14
1620	(pg. 150)	R1400
1630	(pg. 150)	R1400-HM
1640	(pg. 151)	R1410-14
1650	(pg. 151)	R1410
1660	(pg. 151)	R1410-HM
1670	(pg. 151)	R1420-14
1680	(pg. 151)	R1420
1690	(pg. 151)	R1420-HM
1710	(pg. 155)	R1900
1720	(pg. 154)	R1850
1730	(pg. 153)	R1640
1740	(pg. 154)	R1850
1748	(pg. 155)	R1930
1760	(pg. 154)	R1850
1770	(pg. 156)	R1940
1771	(pg. 157)	R1940-SJ
1775	(pg. 158)	R1960
1785	(pg. 152)	R1510
1786	(pg. 152)	R1520
1787	(pg. 153)	R1530
1800	(pg. 143)	R1270
1830	(pg. 126)	R1150
1850	(pg. 143)	R1270-A5
1900	(pg. 164)	R1200-JD-G18H-W31P-16.5L
1901	(pg. 164)	R1200-JD-M-G12H-W31H2
1902	(pg. 159)	R1100-28-G8H
1905	(pg. 162)	R1200-JD-W31P24L-R1404T-1-83
1906	(pg. 162)	R1200-JD-W31P24L-R1404T-1-83
1909	(pg. 162)	R1200-JD-W31P24L-R1104
1910	(pg. 161)	R1200-JD-W31P6L-WD
1913	(pg. 160)	R1200-JD-G8H-AI
1915	(pg. 163)	R1200-JD-W31P24L-R1204-JD
1920	(pg. 163)	R1200-JD-W31P24L-F1444
1930	(pg. 163)	R1200-JD-F1340-G
1935	(pg. 161)	R1200-JD-M-G12H-W31H2
1936	(pg. 159)	R1100-G8H-AI
1937	(pg. 160)	R1200-JD-M-G5H
1940	(pg. 162)	R1200-JD-W3124L-R1404T-1-83
1950	(pg. 126)	R1100-90-G

ROOF DRAINS OPTIONAL VARIATIONS

JR SMITH		MIFAB
-AA	Aluminum body	-80
-AD	Aluminum dome	-M-80
-B	Sediment bucket	-5
-BB	Bronze body	-28
-BS	Bird screen	-83
-BZS	Bronze standpipe	"X"
C	Inside caulk outlet	X
-C	Underdeck clamp	-U
-CID	Metal dome	-49
-CID8	8" high metal dome	-M
-CIDG	Galvanized dome	-M-12
-CIDSSM	Metal dome with SS mesh screen	A2-SSD
-CIS	Cast iron standpipe	"X"
-CL	Underdeck clamp	-U
-CP	CP dome/grate	-49
-C2	Secondary clamp	-C
-D	Dome grate	-20
-DNB	NB dome grate	-20-1
-DPB	PB dome grate	-20-1
-DX	Ext. wide flange	-Z
-E	Fixed extension	-V
-G	All galvanized	-13
-GG	SS ballast guard	-G
-HP	Heel proof grate	Standard
L	Push on outlet	P
-LD	Less dome	Less dome
-M	Ductile iron grate	-4
-N	NB grate	-1
-NB	NB grate	-1
-NBM	NB veneer over DI grate	-1
-P	PB grate	-1
-PB	PB grate	-1
-PBM	PB veneer over DI grate	-1
-R	Sump receiver	-B
-RB	Rough bronze	-2RB
-RBD	Rough br. dome	-81
-S	Square top	-16
-SEC	Secured grate	-6
-SH	Securing holes	"X"
-SNB	NB square top	-16-1
-SPB	PB square top	-16-1
-SSM	SS mesh over dome	-83
T	Threaded outlet	T
-U	Vandal proof	-6
-W	3/8" weep holes in collar.....	"X"
-WD	Water dam	
-W2, -W3, -W4		
-WD02	2" water dam	-R
-WR	Multiple weir open	-F
-WR1	1 weir opening	0
-WR2	2 weir openings	-F2
-WR3	3 weir openings	0
Y	No hub outlet	Standard

"X" Contact MIFAB

FLOOR AND AREA DRAINS

JR SMITH		MIFAB
2005	(pg. 315)	A1-C body*
2005-A	(pg. 37)	F1100-C*
DX2005-A	(pg. 47)	F1100-C-Z*
DX2005-B	(pg. 48)	F1100-C-ZS*
2005-AV	(pg. 37)	F1100-C-8*
2005-B	(pg. 43)	F1100-C-S*
2005-BS	(pg. 44)	F1100-C-SD6*
2005-C	(pg. 46)	F1100-C-X*
2005-D	(pg. 42)	.F1100-C-N7*
2005-E	(pg. 42)	F1100-C-N9*
2005-F	(pg. 41)	F1100-C-FT6*
2005-F37	(pg. 40)	F1100-C-ER7*
2005-F38	(pg. 40)	F1100-C-ER9*
2005-G	(pg. 42)	F1100-C-K*
2005-H	(pg. 45)	F1100-C-VD*
2005-J	(pg. 45)	F1100-C-T*
2005-K	(pg. 47)	F1100-C-XS*
2005-L	(pg. 43)	F1100-C-RS48*
2005-M	(pg. 43)	F1100-C-RS412*
2005-N	(pg. 43)	F1100-C-RS412*
2005-P	(pg. 43)	F1100-C-RS517*
2005-R	(pg. 43)	F1100-C-RS517*
2005-T	(pg. 43)	F1100-C-RS517*
2005-V	(pg. 38)	F1100-C-AS*
2005-W	(pg. 38)	F1100-C-AS*
2005-Y	(pg. 46)	F1100-C-WD*
2005-Z	(pg. 46)	F1100-C-WD*
2005-69	(pg. 46)	F1100-C-X*
2010	(pg. 315)	A1-X-C body*
2010-A	(pg. 37)	F1100X-C*
DX2005-A	(pg. 47)	F1100X-C-Z*
DX2010-B	(pg. 48)	F1100X-C-ZS*
2010-AV	(pg. 37)	F1100X-C-8*
2010-B	(pg. 43)	F1100X-C-S*
2010-BS	(pg. 44)	F1100X-C-SD6*
2010-C	(pg. 46)	F1100X-C-X*
2010-D	(pg. 42)	F1100X-C-N7*
2010-E	(pg. 42)	F1100X-C-N9*
2010-F	(pg. 41)	F1100X-C-FT6*
2010-F37	(pg. 40)	F1100X-C-ER7*
2010-F38	(pg. 40)	F1100X-C-ER9*
2010-G	(pg. 42)	F1100X-C-K*
2010-H	(pg. 45)	F1100X-C-VD*
2010-J	(pg. 45)	F1100X-C-T*
2010-K	(pg. 47)	F1100X-C-XS*
2010-L	(pg. 43)	F1100X-C-RS-48*
2010-M	(pg. 43)	F1100X-C-RS-412*
2010-N	(pg. 43)	F1100X-C-RS-412*
2010-P	(pg. 43)	F1100X-C-RS-517*
2010-R	(pg. 43)	F1100X-C-RS-517*
2010-T	(pg. 43)	F1100X-C-RS-517*
2010-V	(pg. 38)	F1100X-C-AS*
2010-W	(pg. 38)	F1100X-C-AS*
2010-WF-1A	(pg. 55)	F1230-WF
2010-Y	(pg. 46)	F1100X-C-WD*
2010-Z	(pg. 46)	F1100X-C-WD*
DX2010-B	(pg. 48)	F1100X-C-ZS*
2015	(pg. 315)	A1-2,3,4T-90-7-C*
2016	(pg. 53)	F1160
2017	(pg. 54)	F1170
2020	(pg. 52)	F1120-C*
2021	(pg. 52)	F1120-C*
2030	(pg. 52)	F1120-C*
2031	(pg. 52)	F1120-C*
2038	(pg. 85)	F1900
2039-DID	(pg. 85)	F1920
2040	(pg. 52)	F1130C
2041	(pg. 52)	F1130C
2050	(pg. 40)	F1100-C-FC9*
2051	(pg. 40)	F1100-C-FC7*
2095	(pg. 54)	F1170-C*
2110	(pg. 57)	F1320-C-Y-14*
2115	(pg. 57)	F1320-C-90-Y-14*
2120	(pg. 57)	F1320-C-Y*
2125	(pg. 57)	F1320-C-90-Y*
2131	(pg. 60)	F1340-Y-14
2135	(pg. 62)	F1340-Y-Q-14-90
2140	(pg. 62)	F1340-Y-Q
2141	(pg. 60)	F1340-Y
2142	(pg. 60)	F1340-Y-5
2143	(pg. 65)	F1360-C-Y*
2145	(pg. 60)	F1340-Y-90
2147	(pg. 60)	F1340-Y-14-5-90
2210	(pg. 58)	F1320-TFB-4
2215	(pg. 58)	F1320-TFB-90-4
2220	(pg. 58)	F1320-C-TFB-4*
2225	(pg. 58)	F1320-C-TFB-90-4*
2230	(pg. 61)	F1340-TFB-4
2231	(pg. 61)	F1340-TFB-4
2233	(pg. 60)	F1340-Y-14-5
2235	(pg. 60)	F1340-Y-5-90
2238	(pg. 60)	F1340-Y-5-90
2240	(pg. 63)	F1350-TFB-4
2241	(pg. 63)	F1350-TFB-4
2242	(pg. 63)	F1350-5
2243	(pg. 63)	F1350-5
2245	(pg. 63)	F1350-5-90
2247	(pg. 63)	F1350-5-90
2248	(pg. 63)	F1350-5-90
2250	(pg. 65)	F1360-C-5*
2253	(pg. 66)	F1370-C-5*
2255	(pg. 65)	F1360-C-Y-5-90*
2270	(pg. 57)	F1320-Y-14
2275	(pg. 57)	F1320-Y-14-90
2280	(pg. 41)	F1100-HG8-3
2285	(pg. 41)	F1100-HG8-90-3

Design and dimensions are subject to modification. Prices do not include applicable taxes. Visit **www.mifab.com** for the most recent product information.
MIFAB®, Inc., 1321 West 119th Street, Chicago, Illinois 60643-5109, USA Toll Free: 1-800-465-2736 • Fax: 1-773-341-3049
sales@mifab.com • Canada Toll Free: 1-800-387-3880
All sales subject to MIFAB's® Terms & Warranties. Please refer to inside front cover.

2310	(pg. 57)	F1320-C-14*
DX2312	(pg. 57)	F1320-C-14-Z*
DX2312B	(pg. 57)	F1320-C-14-5-Z*
2315	(pg. 57)	F1320-C-14-90*
2320	(pg. 57)	F1320-C*
2325	(pg. 57)	F1320-C-90*
2330	(pg. 60)	F1340-C-14*
2331	(pg. 62)	F1340-C-Q-14*
2335	(pg. 60)	F1340-14-90
2340	(pg. 60)	F1340
2341	(pg. 62)	F1340-Q
2345	(pg. 60)	F1340-90
2350	(pg. 58)	F1320-C-TFB-14*
2355	(pg. 58)	F1320-C-TFB-14-90*
2360	(pg. 61)	F1340-C-TFB-14*
2365	(pg. 61)	F1340-C-TFB-14-90*
2370	(pg. 67)	F1420-Y-5
2377	(pg. 68)	F1440
2385	(pg. 67)	F1420-Y-6
2402	(pg. 67)	F1420-Y
2410	(pg. 70)	F1450-Y-14-5-6
2412	(pg. 67)	F1420-Y-5-14
2414	(pg. 68)	F1440-5-14-6
2415	(pg. 70)	F1450-Y-5-14-6
2420	(pg. 70)	F1450-5-26-33-90
2425	(pg. 70)	F1450-5-26-90
2450	(pg. 71)	F1460-5
2452	(pg. 71)	F1460-5
2455	(pg. 76)	F1560
2470	(pg. 73)	F1480-4
2473	(pg. 73)	F1480-FL-4
2475	(pg. 76)	F1560-4
2478	(pg. 68)	F1440-Y-5-14-90
2484	(pg. 212)	MI-OS
2488	(pg. 71)	F1460-4-5
2490	(pg. 59)	F1330C-33
2495	(pg. 59)	F1330C
2500	(pg. 80)	F1650
2501	(pg. 80)	F1650-A
2502	(pg. 80)	F1650
2505	(pg. 80)	F1650-G
2506	(pg. 80)	F1650-G-A
2507	(pg. 80)	F1650-G
2508	(pg. 80)	F1660
2510	(pg. 53)	F1140C
2515	(pg. 53)	F1140C
2530	(pg. 53)	F1140C
DX2565	(pg. 57)	F1320-Y-Z-5-14
DX2566	(pg. 60)	F1340-Y-Z-5-14
DX2568	(pg. 47)	F1100-ZX6-1
2570	(pg. 91)	T1350-FL
2585	(pg. 81)	F1760-FL
2586	(pg. 81)	F1760-FL
2589	(pg. 69)	F1440-C-Y-5-Q*
2614	(pg. 74)	F1530
2624	(pg. 75)	F1550
2630	(pg. 84)	F1860-16-4-5
2631	(pg. 84)	F1860-5
2632	(pg. 84)	F1860-16-4
2633	(pg. 84)	F1860
2640	(pg. 79)	F1640-C*
2641	(pg. 288)	MI-860
2643	.....	"X"
2645	(pg. 288)	MI-830
2646	(pg. 288)	MI-850
2648	(pg. 288)	MI-860
2650	(pg. 66)	F1370-18
2651	.....	"X"
2652	(pg. 288)	MI-800
2670	(pg. 150)	R1400-HM-83
2671	(pg. 150)	R1400-HM-83
2673	(pg. 151)	R1410-HM-83
2674	(pg. 151)	R1420-HM-83
2675	(pg. 82)	F1820
2680	(pg. 83)	F1830-P
2685	(pg. 83)	F1830-PL
2690	(pg. 64)	F1350-Y-36
2692	(pg. 309)	MI-GARD

FLOOR AND AREA DRAIN OPTIONAL VARIATIONS

JR SMITH		MIFAB
-A06STw/ 6"SS		-9
-AB	Sediment bucket	-5
-ARI	ARC inside	-11
-ARIO	ARC inside and out	-11
-B	Sediment bucket	-5
-BB	Bronze body	-28
-BFV	Backwater valve	-8
-BG	Galv. Sed. Bucket	-13
-BS	Bucket w/SS mesh Screen	-35
-BV	Backwater valve	-8
C	Inside caulk outlet	X
-C	Membrane clamp	-C
-CIB	Cast iron bucket	-5-50
-CP	Chrome plated strainer	-49
-D	Dome grate	-20
-DBS	Dome bottom strainer	-20
-DG	Deflector grate	Standard
-DID	Stablizing Plate	F1900
-DNB	Dome grate, NB	-20-1
-DNP	Dome grate, PB	-20-1
-E	Extension	-15
-F	4" round funnel	0
FBS	Flat bottom strainer	-21
-FBS	Secondary strainer	-21
-FBSCI	Flat bottom strainer	CI -21-50
-FP	Bucket w/seepage hole	-5
-FP	Frost proof bucket	"X"
-G	All galvanized	-13
-GC	Gasketed/Water tight.....	"X"
-GS	Galvanized strainer	"X"
-H	Hinged grate	-9
-HC	2" High Collar	"X"
-HC4	.4" High collar	"X"
-HP	Heel proof grate	Standard
L	Push on outlet	P
-LWH	Less weep holes	"X"
-M	Ductile iron grate	-4
-MGB	Ductile iron bucket/grate.....	"X"
-N	High auxiliary inlet	-44
-NH	Low auxiliary inlet	-44
-NL	Auxiliary inlet	-44
-N15	1 1/2" aux. Inlet	-44T
-N2	2" aux. Inlet	-44
-P	Trap seal primer tap	-7
-P0501/	trap seal prim. Tap	-7
-P0753/	trap seal prim. Tap	"X"
-R	Membrane clamp	-C
-S	Square top	-16
-SEC	Secured grate	-6
-SC	Secured cover	-6
-SC	Smooth cover	"X"
-SC	Solid scoriated cover	"X"
-SG	Strainer grate	"X"
-SG	Secondary strainer	-21
-SH	Securing holes in flan	"X"
-SNB	Square top, NB	-17
-SPB	Square top, PB	-16-1
-SSB	SS sediment bucket	-5-3
-SW	Spanner wrench	H-1042
T	Threaded outlet	T
-U	Vandal proof	-6
-V	Backwater valve	-8
-X	Extension	-15
-XP	Closure plug	-34
Y	No hub outlet	Standard
-XP	Closure plug	-34
-94	Push on outlet	P

Note: This guide is prepared to assist in determining the MIFAB Catalog number which is similar to the J R Smith number referred to. Due to the simplified modular design of MIFAB products, this index indicates the product which is closest in design, based on function: eg. Free Area, Loading Rating, Depth, Material etc.

*** Includes "-C"membrane clamp in areas with waterproof Membrane. As a recommended alternate, use F1100 in non membrane**

"X" Contact MIFAB

2000 SERIES FLOOR DRAIN ADJUSTABLE STRAINER VARIATIONS

JR SMITH		MIFAB
A-05	(pg. 50)	-5-1
A-06	(pg. 50)	-6-1
A-07	(pg. 50)	-7-1
A-08	(pg. 50)	-8-1
A-09	(pg. 50)	-10-1
A-10	(pg. 50)	-10-1
AV-05	(pg. 50)	-5-1-8
AV-06	(pg. 50)	-6-1-8
AV-07	(pg. 50)	-7-1-8
AV-08	(pg. 50)	-8-1-8
B-05	(pg. 51)	-S5-1
B-06	(pg. 51)	-S6-1
B-07	(pg. 51)	-S8-1
B-08	(pg. 51)	-S8-1
B-09	(pg. 51)	-S10-1
B-10	(pg. 51)	-S10-1
BS	(pg. 51)	-SD6-3
C-05	(pg. 51)	-X5-1
C-06	(pg. 51)	-X6-1
C-08	(pg. 51)	-X8-1
C-10	(pg. 51)	-X10-3
D	(pg. 50)	-N7
DXA	(pg. 51)	-Z5-1
DXB	(pg. 51)	-ZS-1
E	(pg. 50)	-N9
F	(pg. 50)	-FT6-1
F10	(pg. 50)	-EF
F11	(pg. 50)	-EF
F12	(pg. 51)	-S-F4
F13	(pg. 50)	-RS48-F4
F14	(pg. 50)	-RS412-F4
F15	(pg. 50)	-RS412-F4
-F16	(pg. 50)	-RS517-F4
-F17	(pg. 50)	-RS517-F4
-F18	(pg. 50)	-RS517-F4
-F19	(pg. 50)	-EG-8
-F20	(pg. 50)	-EG-6
-F21	(pg. 50)	-EG-7
-F22	(pg. 50)	-EG-8
-F23	(pg. 50)	-EG-10
-F24	(pg. 50)	-EG-10
-F25	(pg. 50)	-EG-S6
-F26	(pg. 50)	-EG-S8
-F27	(pg. 50)	-EG-S8
-F28	(pg. 50)	-EG-S10
-F29	(pg. 50)	-EG-S10
-F30	(pg. 50)	-EG-RS48
-F31	(pg. 50)	-EG-RS412
-F32	(pg. 50)	-EG-RS412
-F33	(pg. 50)	-EG-RS517
-F34	(pg. 50)	-EG-RS517
-F35	(pg. 50)	-EG-RS517
-F37	(pg. 50)	-ER7
-F38	(pg. 50)	-ER9
-F40	(pg. 51)	-W
-F41	(pg. 51)	-W
-G	(pg. 50)	-K-1
-H	(pg. 51)	-VD5-3
-J	(pg. 51)	-T6-3
-K-05	(pg. 51)	-XS5-1
-K-06	(pg. 51)	-XS6-1
-K-07	(pg. 51)	-XS8-1
-K-08	(pg. 51)	-XS8-1
-L	(pg. 50)	-RS48-1
-M	(pg. 50)	-RS412-1
-N	(pg. 50)	-RS412-1
-P	(pg. 50)	-RS517-3
-R	(pg. 50)	-RS517-3
-T	(pg. 50)	-RS517-3

-V	(pg. 50)	-AS-1
-W	(pg. 50)	-AS-1
-X	(pg. 50)	-DD-50
-Y	(pg. 51)	-WD-3
-Z	(pg. 51)	-WD-3
-69	(pg. 51)	-X6-1
3580	(pg. 50)	-F4
3581	(pg. 50)	-F6-1
3590	(pg. 50)	-J
3591	(pg. 50)	-G-1

TRAP SEAL PRIMERS AND SPECIALTIES

JR SMITH		MIFAB
2695	(pg. 307)	MI-600-50
2696	(pg. 309)	MI-GARD
2697	.....	"X"
2698	(pg. 308)	MI-750
2699	(pg. 296)	MI-TSP-2
2699-1	(pg. 296)	MI-TSP-1
3950	(pg. 290)	MI-CAG-T
3951	(pg. 290)	MI-CAG-T
3955	(pg. 290)	MI-CAG-NH

TRENCH DRAINS

JR SMITH		MIFAB
2710	(pg. 91)	T1350-FL-4
2710-DH	(pg. 91)	T1350-FL-4
2711	(pg. 91)	T1350-FL-4
2712	(pg. 91)	T1350-FL2-4
2713	(pg. 91)	T1350-FL3-4
2714	(pg. 91)	T1350-FL4-4
2715	(pg. 91)	T1350-FL5-4
2716	(pg. 91)	T1350-FL6-4
2717	(pg. 91)	T1350-FL7-4
2718	(pg. 91)	T1350-FL8-4
2719	(pg. 91)	T1350-FL9-4
2720	(pg. 91)	T1350-FL10-4
2810	(pg. 91)	T1320-FL-4
2811	(pg. 91)	T1320-FL-4
2812	(pg. 91)	T1320-FL2-4
2813	(pg. 91)	T1320-FL3-4
2814	(pg. 91)	T1320-FL4-4
2815	(pg. 91)	T1320-FL5-4
2816	(pg. 91)	T1320-FL6-4
2817	(pg. 91)	T1320-FL7-4
2818	(pg. 91)	T1320-FL8-4
2819	(pg. 91)	T1320-FL9-4
2820	(pg. 91)	T1320-FL10-4
2900	(pg. 90)	T1000-3
2901	(pg. 90)	T1000-F-3
2902	(pg. 90)	T1000-F2-3
2903	(pg. 90)	T1000-F3-3
2904	(pg. 90)	T1000-F4-3
2905	(pg. 90)	T1000-F5-3
2910	(pg. 90)	T1150-4
2911	(pg. 90)	T1150-F-4
2912	(pg. 90)	T1150-F2-4
2920	(pg. 90)	T1200-F-4
2922	(pg. 90)	T1200-F2-4
2923	(pg. 90)	T1200-F3-4
2924	(pg. 90)	T1200-F4-4
2940	(pg. 90)	T1200-4
2941	(pg. 90)	T1200-F-4
2942	(pg. 90)	T1200-F2-4
2950	(pg. 90)	T1200-F2-4
2952	(pg. 90)	T1200-F2-4
2953	(pg. 90)	T1200-F3-4
2954	(pg. 90)	T1200-F4-4
2970	(pg. 90)	T1200-4
2971	(pg. 90)	T1200-F-4
2972	(pg. 90)	T1200-F-4-C
2980	(pg. 90)	T1200-F-4
2982	(pg. 90)	1200-F2-4
2983	(pg. 90)	T1200-F3-4
2984	(pg. 90)	T1200-F4-4

TRENCH DRAIN OPTIONAL VARIATIONS

JR SMITH		MIFAB
-ARIO	ARC inside and out	-11
C	Inside caulk outlet	X
-C	Flashing clamp	-C
-DBSCICI	Dome bottom strainer	-20
-DH	Deep no hub outlet	"X"
-F	Anchor flange	-FL
-F-C	Anchor flange with membrane clamp	-FLC
-G	All galvanized	-13
-HP	Heel proof	Standard
-M	Ductile iron grate	Standard
-NB	Stainless steel veneer	-3
-PB	Stainless steel veneer	-3
-SG	Slotted cast iron grate	Standard
-T	Threaded outlet	T
-U	Vandal proof	-6
-V	Backwater valve	-8
-VCI	Backwater valve	-8
-VG	Backwater valve	-8
Y	No hub outlet	Standard

INDIRECT WASTE DRAINS

JR SMITH		MIFAB
3001	(pg. 106)	FS1910-FL
3001NB	(pg. 106)	FS1910-FL-1
3002	(pg. 106)	FS1920-FL
3002NB	(pg. 106)	FS1920-FL-1
3003	(pg. 106)	FS1930-FL
3003NB	(pg. 106)	FS1930-FL-1
3004	(pg. 106)	FS1940-FL
3004NB	(pg. 106)	FS1940-FL-1
3005	(pg. 106)	FS1910-FL-5
3006	(pg. 106)	FS1920-FL-5
3007	(pg. 106)	FS1930-FL-5
3008	(pg. 106)	FS1940-FL-5
3020	(pg. 42)	F1100-C-N9-1-11*
3020-F	(pg. 42)	F1100-C-N9-1-11*
3021	(pg. 42)	F1100-C-N9-1-5-11*
3021-F	(pg. 42)	F1100-C-N9-1-5-11*
DX3027	(pg. 102)	FS1750-5-1-Z
3030	(pg. 103)	FS1760-1
3030-F	(pg. 103)	FS1760-FL-1
3031	(pg. 103)	FS1760-5-1
3031-F	(pg. 103)	FS1760-FL-5-1
3038-DID	(pg. 107)	FS1959
3039-DID	(pg. 107)	FS1960
3040	(pg. 102)	FS1750-1
3040-F	(pg. 102)	FS1750-FL-1
3041	(pg. 102)	FS1750-5-1
3041-F	(pg. 102)	FS1750-FL-5-1
3060	(pg. 103)	FS1760-1
3060-F	(pg. 103)	FS1760-FL-1
3061	(pg. 103)	FS1760-5-1
3061-F	(pg. 103)	.FS1760-FL-5-1
DX3068	(pg. 103)	FS1760-5-1-Z
3100	(pg. 97)	FS1520-FL-1
3101	(pg. 97)	FS1520-FL-5-1
3110	(pg. 99)	FS1720-FL-1
3111	(pg. 99)	FS1720-FL-5-1
3120	(pg. 100)	FS1730-FL-1
3121	(pg. 100)	FS1730-FL-5-1
3130	(pg. 100)	FS1740-FL-1
3131	(pg. 102)	FS1750-FL-5-1
3140	(pg. 99)	FS1720-FL-1
3141	(pg. 99)	FS1720-FL-5-1
3150	(pg. 100)	FS1730-FL-1
3151	(pg. 100)	FS1730-FL-5-1
3160	(pg. 101)	FS1740-FL-1
3200	(pg. 104)	FS1770-FL-1
3201	(pg. 104)	FS1770-FL-1-5
3250	(pg. 105)	FS1790-FL-1
3251	(pg. 105)	FS1790-FL-1-5
3300	(pg. 98)	FS1530-FL-1
3301	(pg. 98)	FS1530-FL-5-1
3320	(pg. 102)	FS1750-FL-11-21-1
3321	(pg. 102)	FS1750-FL-5-11-21-1
3365	(pg. 40)	F1100-C-ER9*
3370	(pg. 64)	F1350-Y-36
3371	(pg. 64)	F1350-Y-36
3380	(pg. 80)	F1670-5
3385	(pg. 80)	F1670-5
3400	(pg. 103)	FS1760-FL
3401	(pg. 103)	FS1760-FL-5
3402	.....	"X"
3410	(pg. 97)	FS1520-FL
3411	(pg. 97)	FS1520-FL-5
3412	.....	"X"
3420	(pg. 99)	FS1720-FL
3421	(pg. 99)	FS1720-FL-5
3430	(pg. 100)	FS1730-FL
3431	(pg. 100)	FS1730-FL-5
3440	(pg. 101)	FS1740-FL
3441	(pg. 101)	FS1740-FL-5
3450	(pg. 104)	FS1770-FL-1
3451	(pg. 104)	FS1770-FL-5-1
3460	(pg. 98)	FS1530-FL
3461	(pg. 98)	FS1530-FL-5
3470	(pg. 102)	FS1750-FL-11-21
3471	(pg. 102)	FS1750-FL-5-11-21
3482	(pg. 105)	FS1790-FL
3483	(pg. 105)	FS1790-FL-5
3510	(pg. 39)	F1100-C-EF*
3510-A	(pg. 39)	F1100-C-EF-1*
3510-S	(pg. 39)	F1100-C-S-EF-1*
3510-F11	(pg. 39)	F1100-C-EF*
3515	(pg. 39)	F1100-C-EF-90*
3515-F11	(pg. 39)	F1100-C-EF-90*
3520	(pg. 52)	F1120-C-EF*
3520-F11	(pg. 52)	F1120-C-EF*
3521	(pg. 52)	F1120-C-EF-NH*
3521-F11	(pg. 52)	F1120-C-EF-NH*
3530	(pg. 52)	F1120-C-EF*
3530-F11	(pg. 52)	F1120-C-EF*
3531	(pg. 52)	F1120-C-EF-NH*
3531-F11	(pg. 52)	F1120-C-EF-NH*
3540	(pg. 52)	F1130C-EF
3540-F11	(pg. 52)	F1130C-EF
3541	(pg. 52)	F1130C-EF
3541-F11	(pg. 52)	F1130C-EF
3580	(pg. 50)	-F4
3581	(pg. 50)	-F6
3590	(pg. 50)	-J
3591	(pg. 50)	-G
3610	(pg. 57)	F1320-C-F4*
3615	(pg. 60)	F1340-C-F4*
3620	(pg. 57)	F1320-C-90-F4*
3625	(pg. 60)	F1340-C-90-F4*
3650	(pg. 57)	F1320-C-G*
3655	(pg. 60)	F1340-C-G*
3660	(pg. 57)	F1320-C-90-G*
3665	(pg. 60)	F1340-C-90-G*
3710	(pg. 57)	F1320-C-Y-14-F4*
3715	(pg. 62)	F1340-C-Y-Q-14-F4*
3720	(pg. 57)	F1320-C-Y-14-90-F4*
3725	(pg. 60)	F1340-C-Y-14-90-F4*
3750	(pg. 57)	F1320-C-Y-Q-14-G*
3755	(pg. 60)	F1340-C-Y-Q-14-G*
3760	(pg. 57)	F1320-C-Y-14-90-G*
3765	(pg. 60)	F1340-C-Y-14-90-G*
3811	(pg. 81)	F1790-11
3812	(pg. 81)	F1790
3813	(pg. 81)	F1790-1
3814	(pg. 81)	F1790-49
3821	(pg. 289)	MI-940
3822	(pg. 289)	MI-940
3823	(pg. 289)	MI-940-28
3824	(pg. 289)	MI-940-49
3950	(pg. 290)	MI-CAG-T
3951	(pg. 290)	MI-CAG-T
3955	(pg. 290)	MI-CAG-NH
3960	(pg. 125)	R1100-RS
3970	(pg. 141)	R1220-RS
3980	(pg. 135)	R1200-RS
SQ-2-1717	(pg. 68)	F1440-5
SQ-4-1753-D	(pg. 37)	F1100

Design and dimensions are subject to modification. Prices do not include applicable taxes. Visit **www.mifab.com** for the most recent product information.
MIFAB®, Inc., 1321 West 119th Street, Chicago, Illinois 60643-5109, USA Toll Free: 1-800-465-2736 • Fax: 1-773-341-3049
sales@mifab.com • Canada Toll Free: 1-800-387-3880
All sales subject to MIFAB's® Terms & Warranties. Please refer to inside front cover.

INDIRECT WASTE DRAIN OPTIONAL VARIATIONS

JR SMITH		MIFAB
-B/M	SS mesh lined bucket	"X"
C	Inside caulk outlet	X
-C	Membrane clamp	C
-CI	Lacquered cast iron	-50
-DBS.SS	dome bottom strainer	"X"
-FBS	Secondary strainer	-21
-G	All galvanized	-13
-L	Push on outlet	P
-LG	Less grate	-21
-LSH	Less seepage holes	"X"
-P	TSP connection	-7
T	Threaded outlet	T
-U	Vandal proof	-6
Y	No hub outlet	Standard
-10	Less NB rim and grate	"X"
-11	Less grate with NB/SS rim	-22
-12	Half grate	-150
-13	Three quar ter grate	-175
-14	Grate w/2-1/2" center hole	"X"
-21	Grate w/4" funnel	F4
-22	Grate w/6" funnel	F6
-25	Grate w/4" x 9" funnel	-G
-26	Grate w/6" x 3" x 1" funnel	-J
-316	316 Stainless Steel	-29

CLEANOUTS

JR SMITH		MIFAB
4000	(pg. 168)	C1100-R
4020	(pg. 168)	C1100-R
4020-F	(pg. 168)	C1100-R
4020-FC	(pg. 168)	C1100-C-R*
4020S	(pg. 168)	C1100-R
4021S	(pg. 168)	C1100-R
4022	(pg. 168)	C1100-R
4023S	(pg. 168)	C1100-R
4024S	(pg. 168)	C1100-R
4025	(pg. 168)	C1100-R
4025C	(pg. 168)	C1100X-R
4026C	(pg. 168)	C1100X-R
4028C	(pg. 168)	C1100X-R
4029C	(pg. 168)	C1100X-R
4031	(pg. 168)	C1100P-R
4031-F	(pg. 168)	C1100P-R
4031-FC	(pg. 168)	C1100P-C-R*
4031L	(pg. 168)	C1100P-R
4032L	(pg. 168)	C1100P-R
4033	(pg. 168)	C1100P-R
4033L	(pg. 168)	C1100P-R
4034L	(pg. 168)	C1100P-R
4040 to 4054L	(pg. 170)	C1100-S
4100 to 4114L	(pg. 172)	C1100-XR
4120 to 4134L	(pg. 168)	C1100-R
4140 to 4154L	(pg. 170)	C1100-T
4160 to 4174L	(pg. 171)	C1100-TS
4180 to 4194L	(pg. 171)	C1100-UR
4200 to 4214L	(pg. 172)	C1100-US
4220 to 4234L	(pg. 172)	C1100-XR
4236 to 4248L	(pg. 172)	C1100-XR
4250 to 4264L	(pg. 178)	C1300-MF w/ C1230
4280 to 4294L	(pg. 176)	C1230
4313	(pg. 168)	C1100-C-R*
4318	(pg. 172)	C1100-C-XR
4333	(pg. 168)	C1100-C-R
4338	(pg. 172)	C1100-C-XR
DX4343	(pg. 168)	C1100-R-Z
4400	(pg. 182)	C1450
4401	(pg. 183)	C1450-RD
4402	(pg. 183)	C1450-RD
4420	(pg. 182)	C1450
4421	(pg. 183)	C1450-RD
4422	(pg. 183)	C1450-RD
4429	(pg. 324)	R-1
4430	(pg. 183)	C1450-S
4431	(pg. 183)	C1450-S
4432	(pg. 182)	C1450-R
4433	(pg. 182)	C1450-R
4434	(pg. 179)	C1430-S
4435	(pg. 183)	C1450-S
4436	(pg. 182)	C1450-R
4437	(pg. 182)	C1450-R
4438	(pg. 182)	C1450-R
4439	(pg. 183)	C1450-S
4440	(pg. 179)	C1430-S
4441	(pg. 179)	C1430-S
4450	(pg. 182)	C1450
4452	(pg. 183)	C1450-RD
4470	(pg. 179)	C1430
4471	(pg. 179)	C1430-RD
4472	(pg. 179)	C1430-RD
4505	(pg. 186)	C1470
4510	(pg. 184)	C1460
4511	(pg. 185)	C1460-RD
4512	(pg. 184)	C1460
4530	(pg. 185)	C1460-RD
4531	(pg. 184)	C1460
4532	(pg. 185)	C1460-RD
4550	(pg. 178)	C1400-S
4551	(pg. 185)	C1460-RD
4553	(pg. 178)	C1400-S
4555	(pg. 185)	C1460-S
4556	(pg. 185)	C1460-S
4558	(pg. 185)	C1460-S
4710	(pg. 179)	C1400-RD
4715	(pg. 179)	C1400-RD
4720	(pg. 179)	C1400-RD
4725	(pg. 178)	C1400-R
4730	(pg. 178)	C1400-S
4735	(pg. 178)	C1400-S
4740	(pg. 188)	MI-VB
4745	(pg. 188)	MI-VB-SM
4760 to 4762	(pg. 188)	UA
4765 to 4767	(pg. 188)	MDW
4810	(pg. 177)	C1300-R
4890	(pg. 176)	C1230
DX4890	(pg. 176)	C1230-WF
4910	(pg. 188)	FHA
4915	(pg. 188)	FHA
4930	(pg. 177)	C1300-S
4940	(pg. 188)	FHA

CLEANOUT OPTIONAL VARIATIONS

JR SMITH		MIFAB
C	Inside a outlet	X
-DX	Extend. wide flange	-Z
-F	Anchor flange	Standard
-F-C	Anchor flange w/membrane clamp	-C
-G	All galvanized	-13
-IP	Iron plug	-34B
L	Push on outlet	P
-LSS	6" long center screw	-87
-M	Ductile iron	-4
-RT	Recessed for tile	-T
-SEC	Secured cover	-6
-SNB	Sq.top, Nickel bronze	-1
-SPB	Squ.op, Polished bronze	-1
-SW	Spanner wrench	H-1042
T	Threaded outlet	T
-U	Vandal proof	-6
-X	Carpet clamping type	-RFC
-Y	Carpet marker	-RC
Y	No hub outlet	Standard

WATER HAMMER ARRESTORS

JR SMITH		MIFAB
5000	(pg. 314)	WHB
5005	(pg. 314)	WHB-A
5010	(pg. 314)	WHB-B
5020	(pg. 314)	WHB-C
5030	(pg. 314)	WHB-D
5040	(pg. 314)	WHB-E
5050	(pg. 314)	WHB-F
5200	(pg. 313)	MWH
5205	(pg. 313)	MWH-A
5210	(pg. 313)	MWH-B
5220	(pg. 313)	MWH-C
5230	(pg. 313)	MWH-D
5240	(pg. 313)	MWH-E
5250	(pg. 313)	MWH-F

HYDRANTS

J R SMITH		MIFAB
5509-QT	(pg. 274)	MHY-26
5509-QT-SAP	(pg. 277)	MHY-55
5515	(pg. 278)	MHY-15-RECT
5517	(pg. 274)	MHY-10-RB
5518	(pg. 278)	MHY-15-RECT
5518-R	(pg. 278)	MHY-3-RB
5519	(pg. 274)	MHY-26-DVB
5560-QT	(pg. 276)	MHY-45
5572	(pg. 283)	MHY-9500 / w/ MHY-90
5572-BFP	(pg. 283)	MHY-9500 / w/ MHY-90-DVB
5573	(pg. 283)	MHY-9500 / w/ MHY-90
5573-BFP	(pg. 283)	MHY-9500 / w/ MHY-90-DVB
5609-QT	(pg. 274)	MHY-16
5609-QT-SAP	(pg. 277)	MHY-50
5615	(pg. 274)	MHY-10
5619	(pg. 274)	MHY-16-DVB
5630	(pg. 274)	MHY-16
5660QT	(pg. 276)	MHY-40
5660QT-SAP	(pg. 276)	MHY-40
5661QT	(pg. 276)	MHY-40
5661QT-SAP	(pg. 276)	MHY-40
5670	(pg. 282)	MHY-90
5670-H	(pg. 282)	MHY-90
5672	(pg. 282)	MHY-90
5673	(pg. 282)	MHY-90
5803	(pg. 279)	MHY-58
5804	(pg. 279)	MHY-58
5810	(pg. 280)	MHY-60-3/4"
5810-F	(pg. 280)	MHY-60-FLM-3/4"
5812	(pg. 280)	MHY-61- 1-1/4"
5813	(pg. 280)	MHY-61-1-1/2"
5814	(pg. 280)	MHY-61-2"
5906	(pg. 279)	MHY-58
5907	(pg. 279)	MHY-58
5909	(pg. 281)	MHY-68
5910	(pg. 281)	MHY-65-3/4"
5911	(pg. 281)	MHY-65-1"
5912	(pg. 281)	MHY-66-1-1/4"
5913	(pg. 281)	MHY-66-1-1/2"
5914	(pg. 281)	MHY-66-2"
5950	(pg. 280)	MHY-60-HSB-3/4"
5951	(pg. 280)	MHY-60-HSB-1"

"X" Contact MIFAB

HYDRANT OPTIONAL VARIATIONS

J R SMITH		MIFAB
-1" Hose conn	(pg. 365, 366)	-O
-CI	(pg. 365, 366)	-50
-CL	(pg. 365, 366)	-K
-CP	(pg. 365, 366)	-49
-E	(pg. 365, 366)	Standard
-E1	(pg. 365, 366)	Standard
-HC1	(pg. 365, 366)	-0
-IC1	(pg. 365, 366)	Standard
-MF1		"X"
-NB	(pg. 365, 366)	-1
-PB	(pg. 365, 366)	-1
-RB	(pg. 365, 366)	-1
-SE	(pg. 365, 366)	Standard
-SE1	(pg. 365, 366)	Standard
-SS	(pg. 365, 366)	Standard
-SS1		"X"
-SSR	(pg. 365, 366)	-RB
-W	(pg. 365, 366)	-95
-WC	(pg. 365, 366)	-WC
-WH	(pg. 365, 366)	-12

BACKWATER VALVES AND TRAPS

J R SMITH		MIFAB
7000	(pg. 285)	BV1210
7012	(pg. 284)	BV1000
7022	(pg. 284)	BV1000
7070	(pg. 286)	BV1280
7080	(pg. 285)	BV1260
7097	(pg. 286)	BV1290
7140	.....	"X"
7150	(pg. 287)	BV1300
7220	(pg. 289)	MI-950
7221	(pg. 289)	MI-950
7222	(pg. 289)	MI-950
7230	(pg. 187)	C1600
7231	(pg. 187)	C1600
7232	(pg. 187)	C1600

INTERCEPTORS

J R SMITH		MIFAB
P500-004	(See website)	MCL-G-0
P500-007	(See website)	MCL-G-1
P500-010	(See website)	MCL-G-2
P500-015	(See website)	MCL-G-3
P500-020	(See website)	MCL-G-4
P500-025	(See website)	MCL-G-5
P500-035	(See website)	MCL-G-6
P500-050	(See website)	MCL-G-7
8000	(pg. 205)	MI-G
8004	(pg. 205)	MI-G-0
8007	(pg. 205)	MI-G-1
8010	(pg. 205)	MI-G-2
8015	(pg. 205)	MI-G-3
8020	(pg. 205)	MI-G-4
8025	(pg. 205)	MI-G-5
8035	(pg. 205)	MI-G-6
8050	(pg. 205)	MI-G-7
8000GT	(pg. 208)	MI-G-SDH
8000GTX	(pg. 208)	MI-G-SDH
8100	(pg. 205)	MI-G-L
8100GT	(pg. 208)	MI-G-L-SDH
8100GTX	(pg. 208)	MI-G-L-SDH
8120	(pg. 205)	MI-G-L-20
8135	(pg. 205)	MI-G-L-35
8150	(pg. 205)	MI-G-L-50
8165	(pg. 218)	MI-G-AD
8166	(pg. 218)	MI-G-L-AD
8175	(pg. 218)	MI-G-AD
8176	(pg. 218)	MI-G-L-AD
8200	(pg. 205)	MI-G-C
8300	(pg. 205)	MI-G w/MI-CS
8300GT	(pg. 208)	MI-G-SDH w/MI-CS
8400	(pg. 206)	XL-MI-G
8400E	(pg. 206)	XL-MI-G-C
8510	(pg. 210)	MI-O
8510E	(pg. 210)	MI-O-C
8560	(pg. 210)	MI-O
8560E	(pg. 210)	MI-O-C
8599	(pg. 211)	MI-O-HU
8710-10	(pg. 212)	MI-SOLID-L
8710-20	(pg. 214)	MI-SD-4-SC
8710-30	(pg. 214)	MI-SD-5-SC
8714	(pg. 212)	MI-SOLID-M
8715	(pg. 212)	MI-SOLID-L
8730	(pg. 212)	MI-SOLID-LB
8738	(pg. 213)	MI-SOLID-SA
8750	(pg. 212)	MI-HAIR
8760	(pg. 212)	MI-HAIR
8811	(pg. 214)	MI-SD
8817	(pg. 214)	MI-SAND
8818	(pg. 214)	MI-SAND-HU
8870	(pg. 213)	MI-SOLID-TA
8870-34	(pg. 213)	MI-SOLID-TA
8905	(pg. 217)	MI-RICE
8910	(pg. 216)	MI-LINT
8925	(pg. 212)	MI-OS
8930	(pg. 76)	F1570

INTERCEPTOR OPTIONAL VARIATIONS

J R SMITH		MIFAB
-AC	(pg. 365, 366)	-AL
-ACC	(pg. 365, 366)	-AL
-ARC	(pg. 365, 366)	Standard
-ARI	(pg. 365, 366)	Standard
-ARIO	(pg. 365, 366)	Standard
-ARO	(pg. 365, 366)	Standard
-B	(pg. 365, 366)	-SB
-E	(pg. 365, 366)	-C
-F	(pg. 365, 366)	-FL
-F-C	(pg. 365, 366)	-FLM
-HC	(pg. 365, 366)	-HD
-QC	(pg. 365, 366)	-TL
-SS	(pg. 365, 366)	-SS
-TC	(pg. 365, 366)	-TL
-U	(pg. 365, 366)	-6
-Y	(pg. 365, 366)	Standard
DI grate	(pg. 365, 366)	-4
No Hub	(pg. 365, 366)	Standard

SPECIALTIES

JR SMITH		MIFAB
9005	(pg. 290)	MI-GRILL
9010	(pg. 290)	MI-GRILL
9020	(pg. 290)	MI-GRILL
9095	(pg. 107)	FS1960
9200	(pg. 308)	MI-750
9205	(pg. 79)	F1640
9340	(pg. 87)	F1100-C-PV-PAVER
9345	(pg. 87)	F1100-C-PV-PAVER
9350	(pg. 87)	C1100-C-PV-PAVER
9502	(pg. 315)	POG
9508	(pg. 315)	POG
9691	(pg. 106)	FS1910-FL
9692	(pg. 106)	FS1920-FL
9693	(pg. 106)	FS1930-FL
9694	(pg. 106)	FS1940-FL
9695	(pg. 106)	FS1910-FL-5
9696	(pg. 106)	FS1920-FL-5
9698	(pg. 106)	FS1930-FL-5
9699	(pg. 106)	FS1940-FL-5
9700	(pg. 37)	F1000-C-6-3-28*
9703	(pg. 50)	F-3
9704	(pg. 50)	G-3
9705	(pg. 37)	F1000-8-3-28-Z
9710	(pg. 37)	F1000-8-3-28
9713	(pg. 37)	F1000-8-3-28
9715	(pg. 37)	F1000-8-3-28-90
9718	(pg. 37)	F1000-8-3-28-90
9720	(pg. 170)	C1100-T7-3-28
9725	(pg. 37)	F1000-8-3-28
9730	(pg. 103)	FS1760-3-28
9733	(pg. 65)	F1360-28-3
9734	(pg. 103)	FS1760-3-28
9735	(pg. 170)	C1100-T7-3-28
9740	(pg. 84)	F1880
9745	(pg. 50)	RS48-3-28-NH
9750	(pg. 52)	F1130C-28-3
9755	(pg. 284)	BV1000-28
9759	(pg. 288)	MI-850-28
9760	(pg. 170)	C1100-T6-3-28
9770	(pg. 170)	C1100-T6-3-28
9775	(pg. 179)	C1430-28
9776	(pg. 179)	C1430-RD-28
9780	(pg. 127)	R1200-M-28
9785	(pg. 148)	R1300-28
9790	(pg. 285)	BV1210-28
9795	(pg. 284)	BV1000-28

Note: This guide is prepared to assist in determining the MIFAB Catalog number which is similar to the J R Smith number referred to. Due to the simplified modular design of MIFAB products, this index indicates the product which is closest in design, based on function: eg. Free Area, Loading Rating, Depth, Material etc.
*** Includes "-C" membrane clamp in areas with waterproof membrane. As a recommended alternate, use F1100 in non membrane areas, delete "-C" membrane clamp.**
*** MC-14 or MC-15 are recommended alternatives. Less pipe space, lower cost and fewer parts**

WADE - MIFAB CROSS REFERENCE

WATER HAMMER ARRESTORS

WADE		MIFAB
4480-A	(pg. 314)	WHB-A
4480-B	(pg. 314)	WHB-B
4480-C	(pg. 314)	WHB-C
4480-D	(pg. 314)	WHB-D
4480-E	(pg. 314)	WHB-E
4480-F	(pg. 314)	WHB-F
4481-A	(pg. 313)	MWH-A
4481-B	(pg. 313)	MWH-B
4481-C	(pg. 313)	MWH-C
4481-D	(pg. 313)	MWH-D
4481-E	(pg. 313)	MWH-E
4481-F	(pg. 313)	MWH-F

WATER CLOSET CARRIERS

WADE		MIFAB
311	(pg. 235)	MC-10
311-CD4	(pg. 237)	MC-10D-HS
311-CL4	(pg. 237)	MC-10L-HS
311-CR4	(pg. 237)	MC-10R-HS
311-ND3	(pg. 234)	MC-10D-3NH
311-ND4	(pg. 235)	MC-10D
311-NL3	(pg. 234)	MC-10L-3NH
311-NL4	(pg. 235)	MC-10L
311-NR3	(pg. 234)	MC-10R-3NH
311-NR4	(pg. 235)	MC-10R
311HD-ND3	(pg. 234)	MC-10D-3NH
311HD-ND4	(pg. 235)	MC-10D
311HD-NL3	(pg. 234)	MC-10L-3NH
311HD-NL4	(pg. 235)	MC-10L
311HD-NR3	(pg. 234)	MC-10R-3NH
311HD-NR4	(pg. 235)	MC-10R
311LR-ND3	(pg. 234)	MC-10D-3NH

Design and dimensions are subject to modification. Prices do not include applicable taxes. Visit **www.mifab.com** for the most recent product information.
MIFAB®, Inc., 1321 West 119th Street, Chicago, Illinois 60643-5109, USA Toll Free: 1-800-465-2736 • Fax: 1-773-341-3049
All sales subject to MIFAB's® Terms & Warranties. Please refer to inside front cover. sales@mifab.com • Canada Toll Free: 1-800-387-3880

311LR-ND4	(pg. 235)	MC-10D
311LR-NL3	(pg. 234)	MC-10L-3NH
311LR-NL4	(pg. 235)	MC-10L
311LR-NR3	(pg. 234)	MC-10R-3NH
311LR-NR4	(pg. 235)	MC-10R
311UA-ND4	(pg. 237)	MC-10D-27
311UA-NL4	(pg. 237)	MC-10L-27
311UA-NR4	(pg. 237)	MC-10R-27
311XB-ND4	(pg. 241)	MC-10D-HDX
311XB-NL4	(pg. 241)	MC-10L-HDX
311XB-NR4	(pg. 241)	MC-10R-HDX
311XH-ND4	(pg. 235)	MC-10D-750
311XH-NL4	(pg. 235)	MC-10L-750
311XH-NR4	(pg. 235)	MC-10R-750
311H	(pg. 236)	MC-10-EXT
311H-ND4	(pg. 236)	MC-10D-EXT
311H-NL4	(pg. 236)	MC-10L-EXT
311H-NR4	(pg. 236)	MC-10R-EXT
330	(pg. 244)	MC-13
330-CD4	(pg. 245)	MC-13D-HS
330-CL4	(pg. 245)	MC-13L-HS
330-CR4	(pg. 245)	MC-13R-HS
330-CD44-A1	(pg. 245)	MC-13D-2-HS
330-CL44-A1	(pg. 245)	MC-13-2-HS
330-CR44-A1	(pg. 245)	MC-13-2-HS
330-CD44-A2	(pg. 245)	MC-13D-2-HS
330-CL44-A2	(pg. 245)	MC-13-2-HS
330-CR44-A2	(pg. 245)	MC-13-2-HS
330-ND4	(pg. 244)	MC-13D
330-NL4	(pg. 244)	MC-13L
330-NR4	(pg. 244)	MC-13R
330-ND44-A1	(pg. 244)	MC-13D-2
330-NL44-A1	(pg. 244)	MC-13-2
330-NR44-A1	(pg. 244)	MC-13-2
330-ND44-A2	(pg. 244)	MC-13D-2
330-NL44-A2	(pg. 244)	MC-13-2
330-NR44-A2	(pg. 244)	MC-13-2
330-ND54-A2	(pg. 244)	MC-13D-2
330-NL54-A2	(pg. 244)	MC-13-2
330-NR54-A2	(pg. 244)	MC-13-2
330-ND64-A2	(pg. 244)	MC-13D-2
330-NL64-A2	(pg. 244)	MC-13-2
330-NR64-A2	(pg. 244)	MC-13-2
330HD-ND4	(pg. 244)	MC-13D
330HD-NL4	(pg. 244)	MC-13L
330HD-NR4	(pg. 244)	MC-13R
330HD-ND44-A1	(pg. 244)	MC-13D-2
330HD-NL44-A1	(pg. 244)	MC-13-2
330HD-NR44-A1	(pg. 244)	MC-13-2
330HD-ND44-A2	(pg. 244)	MC-13D-2
330HD-NL44-A2	(pg. 244)	MC-13-2
330HD-NR44-A2	(pg. 244)	MC-13-2
330HD-ND54-A2	(pg. 244)	MC-13D-2
330HD-NL54-A2	(pg. 244)	MC-13-2
330HD-NR54-A2	(pg. 244)	MC-13-2
330HD-ND64-A2	(pg. 244)	MC-13D-2
330HD-NL64-A2	(pg. 244)	MC-13-2
330HD-NR64-A2	(pg. 244)	MC-13-2
330XH-ND4	(pg. 244)	MC-13D-HD-750
330XH-NL4	(pg. 244)	MC-13L-HD-750
330XH-NR4	(pg. 244)	MC-13R-HD-750
330XH-ND44-A1	(pg. 244)	MC-13D-2-HD-750
330XH-NL44-A1	(pg. 244)	MC-13-2-HD-750
330XH-NR44-A1	(pg. 244)	MC-13-2-HD-750
330XH-ND44-A2	(pg. 244)	MC-13D-2
330XH-NL44-A2	(pg. 244)	MC-13-2
330XH-NR44-A2	(pg. 244)	MC-13-2
330XH-ND54-A2	(pg. 244)	MC-13D-2
330XH-NL54-A2	(pg. 244)	MC-13-2
330XH-NR54-A2	(pg. 244)	MC-13-2
330XH-ND64-A2	(pg. 244)	MC-13D-2
330XH-NL64-A2	(pg. 244)	MC-13-2
330XH-NR64-A2	(pg. 244)	MC-13-2
330XB-ND4	(pg. 244)	MC-13D-HDX
330XB-NL4	(pg. 244)	MC-13L-HDX
330XB-NR4	(pg. 244)	MC-13R-HDX
330XB-ND44-A1	(pg. 244)	MC-13D-2-HDX
330XB-NL44-A1	(pg. 244)	MC-13-2-HDX
330XB-NR44-A1	(pg. 244)	MC-13-2-HDX
330XB-ND44-A2	(pg. 244)	MC-13D-2
330XB-NL44-A2	(pg. 244)	MC-13-2
330XB-NR44-A2	(pg. 244)	MC-13-2
330XB-ND54-A2	(pg. 244)	MC-13D-2
330XB-NL54-A2	(pg. 244)	MC-13-2
330XB-NR54-A2	(pg. 244)	MC-13-2
330XB-ND64-A2	(pg. 244)	MC-13D-2
330XB-NL64-A2	(pg. 244)	MC-13-2
330XB-NR64-A2	(pg. 244)	MC-13-2
350	(pg. 246)	MC-14
350-C4	(pg. 247)	MC-14-4-V4-HS
350-N2	(pg. 246)	MC-14-4-V2
350-N4	(pg. 246)	MC-14-4-V4
360	(pg. 248)	MC-15
360-CD4	(pg. 249)	MC-15D-HS
360-CL4	(pg. 249)	MC-15L-HS
360-CR4	(pg. 249)	MC-15R-HS
360-ND4	(pg. 248)	MC-15D
360-NL4	(pg. 248)	MC-15L
360-NR4	(pg. 248)	MC-15R
362	(pg. 251)	MC-27
362-N4	(pg. 251)	MC-27
362-N4-A1	(pg. 251)	MC-27
380	(pg. 250)	MC-24
380-P3	(pg. 250)	MC-24
380-P4	(pg. 250)	MC-24
397	(pg. 250)	MC-21T

WATER CLOSET CARRIERS OPTIONAL VARIATIONS

WADE		MIFAB
AM1	(pg. 365, 366)	-20
AM21	(pg. 365, 366)	-1
ECC11	(pg. 365, 366)	-12
ECC14	(pg. 365, 366)	-12
ECC24	(pg. 365, 366)	-CI-24
FPO	(pg. 365, 366)	Standard
FPO/ECC14	(pg. 365, 366)	-OR12
HD	(pg. 365, 366)	Standard
JJ	(pg. 365, 366)	-31
JL	(pg. 365, 366)	-26
JR	(pg. 365, 366)	-25
JS	(pg. 365, 366)	-25
JV	(pg. 365, 366)	-26
LR	(pg. 365, 366)	Standard
M3	(pg. 365, 366)	-14
M4	(pg. 365, 366)	-10
M14	(pg. 365, 366)	-FM
M15	(pg. 365, 366)	-19
M17	(pg. 365, 366)	-19
M26	(pg. 365, 366)	-CI-12
PF	(pg. 365, 366)	Standard
UA	(pg. 365, 366)	-27
XB	(pg. 365, 366)	-HDX
XH	(pg. 365, 366)	-HD-750
36	(pg. 365, 366)	-27-37

LAVATORY, URINAL, SINK CARRIERS

WADE		MIFAB
401	(pg. 252)	MC-31
401-D	(pg. 252)	MC-31D
402	(pg. 252)	MC-32
402-D	(pg. 252)	MC-32D
403	(pg. 253)	MC-33
403-D	(pg. 253)	MC-33D
404	(pg. 252)	MC-31
404-CL	(pg. 253)	MC-33
404-D	(pg. 252)	MC-31D
405	(pg. 252)	MC-31-G
405-D	(pg. 252)	MC-31D-G
461	(pg. 254)	MC-36
462	(pg. 254)	MC-38D
510	(pg. 255)	MC-40
510-D	(pg. 255)	MC-40D
513	(pg. 254)	MC-35
520	(pg. 256)	MC-41
520-D	(pg. 257)	MC-41D
525	(pg. 256)	MC-41
525-D	(pg. 257)	MC-41D
530	(pg. 257)	MC-41-R
571	(pg. 262)	MC-53
571CA	(pg. 262)	MC-53
571EA	(pg. 263)	MC-55
572	(pg. 261)	MC-51
572CA	(pg. 261)	MC-51
572EA	(pg. 261)	MC-56
573	(pg. 261)	MC-51
574	(pg. 263)	MC-54
610	(pg. 255)	MC-40
610-D	(pg. 255)	MC-40D
613	(pg. 254)	MC-35
620	(pg. 253)	MC-34
623	(pg. 254)	MC-35
630	(pg. 252)	MC-32
630-AM11	(pg. 252)	MC-32
633	(pg. 253)	MC-33
633-AM11	(pg. 253)	MC-33-2
640	(pg. 264)	MC-61
640-T44	(pg. 264)	MC-61-T
640-N42	(pg. 264)	MC-62-4-V2
640-N44	(pg. 264)	MC-62-4-V4
640-C44	(pg. 264)	MC-62-4-V4-HS
640-NL42	(pg. 264)	MC-62-4-V2
640-NR42	(pg. 264)	MC-62-4-V2
640-CL42	(pg. 264)	MC-62-4-V2-HS
640-CR42	(pg. 264)	MC-62-4-V2-HS

LAVATORY, URINAL, SINK CARRIER OPTIONS

WADE		MIFAB
AM1	(pg. 365, 366)	-20
AM11	(pg. 365, 366)	-G
AM27	(pg. 365, 366)	-20
AM28	(pg. 365, 366)	-20
BL	(pg. 365, 366)	-G
M3	(pg. 365, 366)	-14
M4	(pg. 365, 366)	-A
M18	(pg. 365, 366)	-B
M19	(pg. 365, 366)	-88
M23	(pg. 365, 366)	-E2
M24	(pg. 365, 366)	-WC
M36	(pg. 365, 366)	Standard

FLOOR AND AREA DRAINS

WADE		MIFAB
810	(pg. 55)	F1230
811	(pg. 55)	F1230-30/31
910	(pg. 55)	F1230-WF
P1000-DB	(pg. 37)	F1100-30/31-C*
P1000-R	(pg. 37)	F1100-30/31-C*
P1000-S	(pg. 43)	F1100-30/31-C-S*
1000-AU	(pg. 38)	F1100-AS
1000-DB	(pg. 37)	F1100
1000-DC	(pg. 37)	F1100
1000-ET	(pg. 40)	F1100-ER
1000-HD	(pg. 38)	F1100-DD
1000-KR	(pg. 42)	F1100-K
1000-R	(pg. 37)	F1100
1000-RF	(pg. 40)	F1100-FC
1000-S	(pg. 43)	F1100-S
1000-TL	(pg. 67)	F1420
1000-TX5	(pg. 46)	F1100-X5
1000-TX7	(pg. 56)	F1300
1000-TX8	(pg. 57)	F1320-Y
1030	(pg. 57)	F1320-Y-14
1040	(pg. 57)	F1320-14
1070-A	(pg. 48)	F1100-C-90*
P1100-A	(pg. 37)	F1100-30/31-C*
P1100-DA	(pg. 37)	F1100-30/31-C*
P1100-G	(pg. 43)	F1100-30/31-C-S*
P1100-TS	(pg. 42)	F1100-30/31-C-N*
1100-A	(pg. 37)	F1100-C*
1100-AS	(pg. 38)	F1100-C-AS*
1100-B	(pg. 37)	F1100-C*

1100-BS	(pg. 44)	F1100-C-SD6*
1100-D	(pg. 41)	F1100-C-HG*
1100-DA	(pg. 37)	F1100-C*
1100-DT	(pg. 47)	F1100-C-Z*
1100-ER	(pg. 40)	F1100-C-ER*
1100-F	(pg. 41)	F1100-C-FT*
1100-FC	(pg. 40)	F1100-C-FC*
1100-G	(pg. 43)	F1100-C-S*
1100-H	(pg. 43)	F1100-C-RS*
1100-K	(pg. 42)	F1100-C-K*
1100-L	(pg. 45)	F1100-C-VD5*
1100-MR	(pg. 37)	F1000-C-3*
1100-MS	(pg. 43)	F1000-C-S-3*
1100-N	(pg. 44)	F1000-C-SHG*
1100-P	(pg. 45)	F1000-C-T*
1100-TG	(pg. 67)	F1420-C*
1100-TS	(pg. 42)	F1100-C-N*
1100-VD	(pg. 45)	F1100-C-VD5*
1100-WD	(pg. 46)	F1100-C-WD*
1100-WW	(pg. 39)	F1100-C-EF*
1120-A	(pg. 52)	F1120-C*
1121-A	(pg. 52)	F1130C
1140-A	(pg. 62)	F1120-C*
1200	(pg. 62)	F1340-C-Y-Q
1200E	(pg. 62)	F1340-Y-Q-Z
1207	(pg. 75)	F1540
1210	(pg. 60)	F1340-Y-14
1210E	(pg. 60)	F1340-Y-14-Z
1217	(pg. 75)	F1540
1220	(pg. 63)	F1350-C*
1240	(pg. 60)	F1340-C*
1260	(pg. 60)	F1340-C-Y-14*
1270	(pg. 60)	F1340-C-14*
1300	(pg. 57)	F1320-C-14*
1310	(pg. 57)	F1320-C-Y-14*
1310E	(pg. 57)	F1320-C-Y-14-Z*
1317	(pg. 74)	F1530
1320	(pg. 59)	F1330-C*
1340	(pg. 57)	F1320-C*
1370	(pg. 53)	F1140C
1380	(pg. 57)	F1320-C-14*
1400	(pg. 65)	F1360-C-Y*
1407	(pg. 75)	F1550
1410	(pg. 65)	F1360-C-Y*
1417	(pg. 75)	F1540
1420	(pg. 66)	F1370
1560	(pg. 68)	F1440-Y-14
1570	(pg. 68)	F1440-Y-14
1630	(pg. 125)	R1100-RS
1640	(pg. 56)	F1240
1650	(pg. 67)	F1420
1700	(pg. 66)	F1370
1740	(pg. 76)	F1560
1760	(pg. 81)	F1760-FL
1770	(pg. 285)	BV1210
1780	(pg. 285)	BV1210
1790	(pg. 149)	R1320T
1830	(pg. 80)	F1650
1840	(pg. 53)	F1160
1850-C	(pg. 54)	F1170-C*
1860	(pg. 83)	F1830-P
1861	(pg. 83)	F1830-PL
1862	(pg. 82)	F1820
1865	(pg. 82)	F1810
1867	(pg. 84)	F1840
1890	(pg. 77)	F1580
1891	(pg. 91)	T1320-FL
1980	(pg. 64)	F1350-Y-36
1990	(pg. 64)	F1450-Y-36
2000	(pg. 78)	F1600-C*
2030	(pg. 83)	F1830-PL
2050	(pg. 212)	MI-OS
2070	(pg. 212)	MI-OS
2080	(pg. 212)	MI-OS
2100	(pg. 67)	F1420-C*
2110	(pg. 67)	F1420-C*
2120	(pg. 67)	F1430C
2140	(pg. 67)	F1420-C*
2210	(pg. 57)	F1320-C-90*
2300	(pg. 69)	F1440-C-Y-Q-14*
2310	(pg. 68)	F1440-C-Y*
2340	(pg. 68)	F1440-C*
2350	(pg. 67)	F1420-C-Y-14*
2360	(pg. 71)	F1460-C-5*
2367	(pg. 71)	F1460-C-5*
2370	(pg. 73)	F1480-FL
2390	(pg. 73)	F1490-FL
2397	(pg. 75)	F1550

FLOOR DRAIN ADJUSTABLE STRAINERS

WADE		MIFAB
WP1000-AU5-1	(pg. 50)	AS-1
WP1000-C5-1	(pg. 50)	5-1-CL
WP1000-C6-1	(pg. 50)	6-1-CL
WP1000-DB5-1	(pg. 50)	5-1
WP1000-DB6-1	(pg. 50)	6-1
WP1000-DC5-1	(pg. 50)	5-1
WP1000-DC5-1-41	(pg. 50)	5-1
WP1000-DC6-1	(pg. 50)	6-1
WP1000-DC6-1-41	(pg. 50)	6-1
WP1000-ET5-1	(pg. 50)	ER5-1
WP1000-ET6-1	(pg. 50)	ER7-1
WP1000-HD5-1	(pg. 50)	DD-1
WP1000-HD5-12	(pg. 50)	DD-50
WP1000-HD5-41	(pg. 50)	DD-50-13
WP1000-KR5-1	(pg. 50)	K-1
WP1000-R5-1	(pg. 50)	5-1
WP1000-R6-1	(pg. 50)	6-1
WP1000-RX5-1	(pg. 51)	X5-1
WP1000-RX6-1	(pg. 51)	X6-1
WP1000-RF7-1	(pg. 50)	FC7-1
WP1000-RF7-1-41	(pg. 50)	FC7-1
WP1000-S5-1	(pg. 51)	S5-1
WP1000-S6-1	(pg. 51)	S6-1
WP1000-SX5-1	(pg. 51)	XS5-1
WP1000-SX6-1	(pg. 51)	XS6-1
WP1000-TL8-1	(pg. 320)	F1420-TA-1
WP1000-TL8-1-41	(pg. 320)	F1420-TA-1-12
WP1000-TL8	(pg. 320)	F1420-TA-4
WP1000-TL8-41	(pg. 320)	F1420-TA-4-12
WP1000-TX5-12	(pg. 320)	X5-4
WP1000-TX7-1	(pg. 320)	F1300-TA-1
WP1000-TX7-1-41	(pg. 320)	F1300-TA-1-12
WP1000-TX7-12	(pg. 320)	F1300-TA-4
WP1000-TX8-1	(pg. 320)	F1320-TA-1
WP1000-TX8-1-41	(pg. 320)	F1320-TA-1-12
WP1000-TX8-12	(pg. 320)	F1320-TA-4
WP1000-TX8-12-39	(pg. 320)	F1320-TA-4-12
WP1100-A5-1	(pg. 50)	5-1
WP1100-A5-2	(pg. 50)	5-1
WP1100-A5-85	(pg. 50)	5-3
WP1100-A5-102	(pg. 50)	5-49
WP1100-A5-ARC	(pg. 50)	5-1-11
WP1100-A6-1	(pg. 50)	6-1
WP1100-A6-2	(pg. 50)	6-1
WP1100-A6-85	(pg. 50)	6-3
WP1100-A6-102	(pg. 50)	6-49
WP1100-A6-ARC	(pg. 50)	6-1-11
WP1100-A7-1	(pg. 50)	7-1
WP1100-A7-2	(pg. 50)	7-1
WP1100-A7-85	(pg. 50)	7-3
WP1100-A7-102	(pg. 50)	7-49
WP1100-A7-ARC	(pg. 50)	7-1-11
WP1100-A8-1	(pg. 50)	8-1
WP1100-A8-2	(pg. 50)	8-1
WP1100-A8-85	(pg. 50)	8-3
WP1100-A8-102	(pg. 50)	8-49
WP1100-A8-ARC	(pg. 50)	8-1-11
WP1100-A10-1	(pg. 50)	10-1
WP1100-A10-2	(pg. 50)	10-1
WP1100-A10-85	(pg. 50)	10-3
WP1100-AS5-1	(pg. 50)	AS-1
WP1100-AS5-2	(pg. 50)	AS-1
WP1100-B5-1	(pg. 50)	5-1
WP1100-B5-2	(pg. 50)	5-1
WP1100-B6-1	(pg. 50)	6-1
WP1100-B6-2	(pg. 50)	6-1
WP1100-BS6-1	(pg. 51)	SD6-1
WP1100-BS6-2	(pg. 51)	SD6-1
WP1100-D6-1	(pg. 50)	HG7-3
WP1100-D6-2	(pg. 50)	HG7-3
WP1100-DA5-1	(pg. 50)	5-1
WP1100-DA5-85	(pg. 50)	5-3
WP1100-DA6-1	(pg. 50)	6-1
WP1100-DA6-85	(pg. 50)	6-3
WP1100-DT7-1	(pg. 51)	Z5-1
WP1100-DT7-1-41	(pg. 51)	Z5-1
WP1100-DT7-2	(pg. 51)	Z5-1
WP1100-DT7-2-41	(pg. 51)	Z5-1
WP1100-DT7-85	(pg. 51)	Z5-3
WP1100-DT7-85-41	(pg. 51)	Z5-3
WP1100-ER5-1	(pg. 50)	ER7-1
WP1100-ER5-2	(pg. 50)	ER7-1
WP1100-ER7-1	(pg. 50)	ER7-1
WP1100-ER7-2	(pg. 50)	ER7-1
WP1100-ER7-85	(pg. 50)	ER7-3
WP1100-ER9-1	(pg. 50)	ER9-1
WP1100-ER9-2	(pg. 50)	ER9-1
WP1100-F6-1	(pg. 50)	FT6-1
WP1100-F6-2	(pg. 50)	FT6-3
WP1100-FC6-1	(pg. 50)	FC7-1
WP1100-FC6-1-41	(pg. 50)	FC7-1
WP1100-FC6-2	(pg. 50)	FC7-1
WP1100-FC9-1	(pg. 50)	FC9-1
WP1100-FC9-1-41	(pg. 50)	FC9-1
WP1100-FC9-2	(pg. 50)	FC9-1
WP1100-G4-1	(pg. 51)	S5-1
WP1100-G4-2	(pg. 51)	S5-1
WP1100-G5-1	(pg. 51)	S5-1
WP1100-G5-2	(pg. 51)	S5-1
WP1100-G5-85	(pg. 51)	S5-3
WP1100-G5-102	(pg. 51)	S5-49
WP1100-G6-1	(pg. 51)	S6-1
WP1100-G6-2	(pg. 51)	S6-1
WP1100-G6-85	(pg. 51)	S6-3
WP1100-G6-102	(pg. 51)	S6-49
WP1100-G8-1	(pg. 51)	S8-1
WP1100-G8-2	(pg. 51)	S8-1
WP1100-G8-85	(pg. 51)	S8-3
WP1100-G8-102	(pg. 51)	S8-49
WP1100-G10-85	(pg. 51)	S10-3
WP1100-H4X8-1	(pg. 51)	RS48-1
WP1100-H4X8-2	(pg. 51)	RS48-1
WP1100-H4X12-1	(pg. 51)	RS412-1
WP1100-H4X12-2	(pg. 51)	RS412-1
WP1100-H4X17-1	(pg. 51)	RS517-3
WP1100-H4X17-2	(pg. 51)	RS517-3
WP1100-K6-1	(pg. 50)	K-1
WP1100-K6-2	(pg. 50)	K-1
WP1100-L10-1	(pg. 51)	VD5-3
WP1100-L10-2	(pg. 51)	VD5-3
WP1100-MR5-85	(pg. 50)	5-3
WP1100-MR6-85	(pg. 50)	6-3
WP1100-MS5-85	(pg. 51)	S5-3
WP1100-MS6-85	(pg. 51)	S6-3
WP1100-N6-1	(pg. 51)	SHG6-3
WP1100-N6-2	(pg. 51)	SHG6-3
WP1100-P6-1	(pg. 51)	T6-3
WP1100-P6-2	(pg. 51)	T6-3
WP1100-TG8-1	(pg. 320)	F1420-TA-1
WP1100-TG8-2	(pg. 320)	F1420-TA-1
WP1100-T67-1	(pg. 320)	F1300-TA-1
WP1100-T67-2	(pg. 320)	F1300-TA-1
WP1100-T67-12	(pg. 320)	F1300-TA-4
WP1100-T67-12-VP	(pg. 320)	F1300-TA-4-6
WP1100-T67-41	(pg. 320)	F1300-TA-4-13
WP1100-T67-12-85	(pg. 320)	F1300-TA-3
WP1100-T67-12-41-85	(pg. 320)	F1300-TA-3
WP1100-VD6-1	(pg. 51)	VD5-3
WP1100-VD6-2	(pg. 51)	VD5-3
WP1100-WD3-1	(pg. 51)	WD-3
WP1100-WD3-2	(pg. 51)	WD-3
WP1100-WW7-1	(pg. 50)	EF4-1
WP1100-WW7-2	(pg. 50)	EF4-1

Design and dimensions are subject to modification. Prices do not include applicable taxes. Visit **www.mifab.com** for the most recent product information.
MIFAB®, Inc., 1321 West 119th Street, Chicago, Illinois 60643-5109, USA Toll Free: 1-800-465-2736 • Fax: 1-773-341-3049
All sales subject to MIFAB's® Terms & Warranties. Please refer to inside front cover. sales@mifab.com • Canada Toll Free: 1-800-387-3880

FLOOR AND AREA DRAIN OPTIONS

WADE		MIFAB
-1	Nickel bronze	-1
-2	Polished bronze	-1
-7	Dome grate	-20
-8	Secondary strainer	-21
-11	Heel proof D.I. grate	-HP
-12	Ductile iron	-4
-14	Hinged Grate	-9
-18	Solid cover	-25-1
-23	Extension	SPR-5-1
-24	Anchor Flange	-FL
-25	Solid cover	-25-1
-26	Membrane clamp	-C
-26T	Threaded Membrane clamp	-C2
-27	Sediment bucket	-5
-27/4	Sediment bucket	-5
-31	Backwater valve	-8
-33	Closure plug	-34
-37	Aux. inlet connection	-44
-39	All galvanized	-13
-41	Galv. Top only	-12
-52	Underdeck clamp	-40
-53	Underdeck clamp	-40
-55	Extended Ballast Guard - per 1”	-AR
-56	Standpipe extension (per inch)	-79
-57	Solid Standpipe	-43
-83	Special Engraving	-95
-94	Extension	-15
-102	Chrome Plated Top Assbly	-49
-123	S.S. Mesh Bucket Liner	-35
-126	S.S. Mesh Over Standpipe	-83
ABS	ABS Solvent Weld Bdy	-31
ARC	Acid Resistant Coating	-11
DC	Debris Cover	A1-5-Allstar
DI	Ductile iron	-4
DIA	Deck Installation Assbly	F1900
EF4	4” round funnel	-F4
EF6	6” round funnel	-F6
EG6	6” x 3” funnel	-J-1
EG8	4” x 9” funnel	-G
-IC	Inside caulk outlet	X
-IPS	Threaded outlet	T
MC	2” Aux. Inlet	-44
NH	No hub outlet	Standard
PC	Protective Cover	A1-5-Allstar
PVC	PVC Solvent Weld Bdy	-30
SO	90 Degree Side Outlet	-90
TSD	Trap Seal Device	MI-GARD
TY	Push on outlet	P
VP	Vandal Top	-6
X	Heavy Duty Top Assbly	X

TRENCH DRAINS

WADE		MIFAB
2902	(pg. 90)	T1200-F
2905	(pg. 90)	T1200-F-3
2908	(pg. 90)	T1100-F-2
2920	(pg. 91)	T1350-FL
2950	(pg. 91)	T1320-FL

TRENCH DRAIN OPTIONAL VARIATIONS

WADE		MIFAB
-1	Nickel bronze	-1
-2	Polished bronze	-1
-9	Secondary dome strainer	-20
-12	Ductile iron	-4
-26	Membrane clamp	-C
-27	Sediment bucket	-5
-31	Backwater valve	-8
-39	All galvanized	-13
ARC	Acid Resistant Coating	-11
TSD	Trap Seal Device	MI-GARD
VP	Vandal proof	-6

ROOF DRAINS

WADE		MIFAB
3000	(pg. 127)	R1200
3001	(pg. 142)	R1260
3007	(pg. 130)	R1200-F
3011	(pg. 140)	R1220
3012	(pg. 122)	R1100
3041	(pg. 143)	R1270
3042	(pg. 143)	R1270-M
3043	(pg. 126)	R1150
3044	(pg. 143)	R1270
3046	(pg. 136)	R1200-SO
3049	(pg. 155)	R1930
3061	(pg. 135)	R1200-RS
3062	(pg. 141)	R1220-RS
3063	(pg. 125)	R1100-RS
3101	(pg. 133)	R1200-PR
3105	(pg. 65)	F1360-C*
3111	(pg. 141)	R1220-PR
3115	(pg. 62)	F1340-Y-Q
3119	(pg. 60)	F1340-G
3121	(pg. 67)	F1420-C*
3121-DCT	(pg. 141)	R1220-PR
3230	(pg. 151)	R1420
3230-45O	(pg. 151)	R1410
3240	(pg. 150)	R1400
3241	(pg. 150)	R1400
3242	(pg. 150)	R1400
3270	(pg. 148)	R1300T
3271	(pg. 148)	R1300T
3290	(pg. 149)	R1320T
3350	(pg. 160)	R1200-JD-M-G5H
3351	(pg. 160)	R1200-JD-M-G5H-R
3352	(pg. 164)	R1200-JD-G18H-W31P-16.5L
3353	(pg. 164)	R1200-JD-G18H-W31P-16.5L-43
3354	(pg. 160)	R1200-JD-M-G5H
3355	(pg. 160)	R1200-JD-M-G8H-AI
3356	(pg. 163)	R1200-JD-W31P24L-R1204-JD
3357	(pg. 163)	R1200-JD-W31P24L-F1444
3358	(pg. 163)	R1200-JD-W31P24L-F1444-G
3359	(pg. 162)	R1200-JD-W31P24L-R1104
3600	(pg. 154)	R1850
3671	(pg. 154)	R1850
3690	(pg. 155)	R1930
3691	(pg. 155)	R1930
3880	(pg. 290)	MI-GRILL
3900	(pg. 155)	R1900
3930	(pg. 152)	R1520
3940	(pg. 156)	R1940
3940-NH	(pg. 156)	R1940-NH
3941	(pg. 158)	R1960
3942	(pg. 158)	R1960
3947	(pg. 153)	R1640

ROOF DRAIN OPTIONAL VARIATIONS

WADE		MIFAB
ADF	Adjustable extension	-EU
AE	Adjustable extension	-EU
ARC	Acid resistant coating	-11
AW	Adjustable water regulator	-W
D	2” high water dam	-R
DF	Fixed extension	-V
DFS	Perf. S.S. extension	-G
DP	Ballast guard	-G
E	Elastomeric wide flange	-Z
EB	Adj. drain riser pan	-STR
IC	Inside caulk outlet	X
IPS	Threaded outlet	T
NH	No hub outlet	Standard
SD	Adj. internal overflow dam	-W2,3,4
SO	90 degree side outlet	-90
TY	Push on outlet	P
VP	Vandal proof	-6
-3	Rough bronze dome	-81
-11	Heel proof grate	-HP
-27	Sediment bucket	-5
-39	All galvanized	-13
-40	Galvanized cast iron top	-12
-46	Aluminum dome	-M-80
-47	High dome	-HM
-49	Bronze mesh screen over dome	-83
-50	S.S. mesh screen over dome	-83
-52	Sump receiver	-B
-53	Underdeck clamp	-U
-158	Low profile dome	-M-80
-189	Bearing pan w/ securing hdwre	-B

BACKWATER VALVES

WADE		MIFAB
4200	(pg. 284)	BV1000
4300	(pg. 285)	BV1250

TRAP SEAL PRIMERS AND SPECIALITIES

WADE		MIFAB
4401	(pg. 308)	MI-750
4402	(pg. 295)	MR-500 + MI-DU
4405	(pg. 309)	MI-GARD
4440	(pg. 80)	F1670
4450	(pg. 289)	MI-950
4450-EF	(pg. 289)	MI-950-F
4455	(pg. 288)	MI-830
4456	(pg. 288)	MI-850
4490	(pg. 290)	MI-CAG

INTERCEPTORS

WADE		MIFAB
5100	(pg. 205)	MI-G
5101	(pg. 207)	MI-G-SS
5102	(pg. 207)	MI-G-SD
5103	(pg. 208)	MI-G-SDH
5105	(pg. 205)	MI-G-L
5106	(pg. 208)	MI-G-L-SDH
5200	(pg. 206)	XL-MI-G
5400	(pg. 210)	MI-O
5401	(pg. 210)	MI-O
5500	(pg. 211)	MI-O-HU
5501	(pg. 211)	MI-O-HU
5600	(pg. 216)	MI-LINT
5720	(pg. 212)	MI-SOLID-S
5730	(pg. 212)	MI-SOLID-LB
5740	(pg. 212)	MI-SOLID-M
5741	(pg. 212)	MI-SOLID-L
5750	(pg. 212)	MI-HAIR
5760	(pg. 213)	MI-SOLID-TA
5770	(pg. 213)	MI-SOLID-SA
5790	(pg. 213)	MI-SOLID-SA
5800	(pg. 214)	MI-SD
5810	(pg. 215)	MI-SO
5830	(pg. 216)	MI-LINT
5900	(pg. 214)	MI-SAND

CLEANOUTS

6000	(pg. 168)	C1100-R
8000	(pg. 168)	C1100-R
8010	(pg. 168)	C1100-R
8050	(pg. 168)	C1100-R
8130	(pg. 168)	C1100-R
8200	(pg. 168)	C1240
8300	(pg. 177)	C1300-R
8301	(pg. 177)	C1300-S
8302	(pg. 177)	C1300-S
8303	(pg. 178)	C1400-S
8304	(pg. 179)	C1400-RD
8305	(pg. 179)	C1400-RD
8400	(see CLPB book)	C236-TS
8401	(pg. 178)	C1300-MF
8550	(pg. 176)	C1230
8560	(pg. 186)	C1470
8590	(pg. 179)	C1430

CLEANOUT OPTIONAL VARIATIONS

WADE		MIFAB
ARC	Acid resistant coating	-11
CF	Carpet flange	-RFC
CM	Carpet marker	-RC
DT	Tile cover w/elastomeric flange	T-Z
E	Elastomeric flange	-Z
IC	Inside caulk outlet	X
NH	No hub outlet	Standard
-RF	Flooring clamp	-C
S	Square cover	-S
SB	Square cover	-S
TR	Round tile cover	-T
TS	Square tile cover	-TS
TY	Push on outlet	P
UR	Round terrazzo floor cover	-UR
US	Square terrazo floor cover	-US
VP	Vandal proof	-6
X	Heavy duty round cover	-XR
XR	Heavy duty round cover	-XR
XS	Heavy duty square cover	-XS
Z-1	D.I. cover w/ NB veneer	-1
-1	Nickel bronze cover	-1
-2	Bronze cover	-1
-12	Ductile iron top	-4
-26	Clamping ring	-C
-39	Galvanized cast iron	-13
-75	Bronze tapered plug	-34B
-81	Gasketed cover	Standard
-83	Special marking	-95
-85	Stainless steel cover	-3

HYDRANTS

WADE		MIFAB
8601	(pg. 274)	MHY-16
8604	(pg. 274)	MHY-15
8605	(pg. 282)	MHY-90
8607	(pg. 275)	MHY-30
8608	(pg. 275)	MHY-30
8700	(pg. 274)	MHY-20
8701	(pg. 274)	MHY-26
8704	(pg. 274)	MHY-20
8706	(pg. 276)	MHY-45
8707	(pg. 275)	MHY-35
8708	(pg. 275)	MHY-35
8709	(pg. 277)	MHY-55
8800	(pg. 280)	MHY-60
8801	(pg. 280)	MHY-60
8900	(pg. 281)	MHY-65
8900-R	(pg. 279)	MHY-58

FLOOR SINKS

WADE		MIFAB
9000	(pg. 102)	FS1750
9010	(pg. 102)	FS1750
9040	(pg. 103)	FS1760
9130	(pg. 99)	FS1720
9140	(pg. 100)	FS1730
9150	(pg. 101)	FS1740
9160	(pg. 104)	FS1770-FL
9170	(pg. 104)	FS1770-FL
9200	(pg. 98)	FS1530-FL
9240	(pg. 98)	FS1530-FL
9290	(pg. 105)	FS1790
9300	(pg. 80)	F1650
9400	(pg. 80)	F1660

FLOOR SINK OPTIONAL VARIATIONS

WADE		MIFAB
-1	Nickel bronze	-1
-6	Trap seal primer tapping	-7
-14	Hinged grate	-9
-15	Half grate	-150
-16	3/4 grate	-175
-17	Full grate w/ center opening	-51
-18	Solid cover	-25
-21	Less grate	-22
-24	Anchor flange	-FL
-26	Anchor flange and clamp collar	-FL-C
-27	Sediment bucket	-5
-48	Aluminum dome bottom strainer	Standard
-110	A.R.C coated sediment bucket	-5
-123	S.S. mesh liner over bucket	-83
EF4	4” Dia. NB funnel	F4-1
EF6	6” Dia. NB funnel	F6-1
EG6	6”x3”x1” NB funnel	J-1
EG8	4” x 9” NB funnel	G-1
NH	No hub outlet	Standard
TSD	Trap seal device	MI-GARD
TY	Push on outlet	P
VP	Vandal proof	-6
XH	S.S. heavy duty top	-3

WATTS - MIFAB CROSS REFERENCE

BACKWATER VALVES

WATTS		MIFAB
BV-200	(pg. 284)	BV1000
BV-230-R-1	(pg. 284)	BV1200-R-1
BV-230-R-50	(pg. 284)	BV1200-R-4
BV-240	(pg. 286)	BV1280
BV-300	(pg. 285)	BV1260
BV-600	(pg. 285)	BV1210
BV-600-1	(pg. 285)	BV1210-1
BV-800	(pg. 287)	BV1300
BV-1000	(pg. 285)	BV1250

BACKWATER VALVES OPTIONAL VARIATIONS

WATTS		MIFAB
-FG	(pg. 365, 366)	-FG
-1	(pg. 365, 366)	-1
-6	(pg. 365, 366)	-6

WATER CLOSET CARRIERS

WATTS		MIFAB
CA-100	(pg. 235)	MC-10
CA-101	(pg. 235)	MC-10
CA-101-D	(pg. 235)	MC-10D
CA-101-DL	(pg. 239)	MC-10D-27-37
CA-101-L	(pg. 235)	MC-10L
CA-101-L-AUX	(pg. 238)	MC-10L-27
CA-101-LL	(pg. 239)	MC-10L-27-37
CA-101-R	(pg. 235)	MC-10R
CA-101-R-AUX	(pg. 238)	MC-10R-27
CA-101-RL	(pg. 239)	MC-10R-27-37
CA-120	(pg. 242)	MC-12*
CA-121	(pg. 242)	MC-12*
CA-121-D	(pg. 242)	MC-12D*
CA-130	(pg. 244)	MC-13
CA-131	(pg. 244)	MC-13
CA-131-D	(pg. 244)	MC-13D
CA-131-D-2	(pg. 244)	MC-13D-2
CA-131-D2	(pg. 244)	MC-13D-2
CA-131-L	(pg. 244)	MC-13L
CA-131-R	(pg. 244)	MC-13R
CA-131-2	(pg. 244)	MC-13-2
CA-140	(pg. 246)	MC-14
CA-141	(pg. 246)	MC-14
CA-141-DL	(pg. 244)	MC-13D
CA-141-3	(pg. 246)	MC-14-3-V2
CA-141-3-V2-L	(pg. 246)	MC-14-3-V2
CA-141-4-D	(pg. 244)	MC-13D
CA-141-4-DL	(pg. 244)	MC-13D
CA-141-4-V2	(pg. 246)	MC-14-4-V2
CA-141-4-V2-L	(pg. 246)	MC-14-4-V2
CA-141-4-V4	(pg. 246)	MC-14-4-V4
CA-141-4-V4-L	(pg. 246)	MC-14-4-V4
CA-150	(pg. 248)	MC-15
CA-151	(pg. 248)	MC-15
CA-151-D	(pg. 248)	MC-15D
CA-151-DL	(pg. 248)	MC-15D
CA-151-L	(pg. 248)	MC-15L
CA-151-LL	(pg. 248)	MC-15L
CA-151-R	(pg. 248)	MC-15R
CA-151-RL	(pg. 248)	MC-15R
CA-200	(pg. 250)	MC-21
CA-201	(pg. 250)	MC-21N
CA-201-T	(pg. 250)	MC-21T
CA-201T	(pg. 250)	MC-21T
CA-202	(pg. 250)	MC-22N
CA-202-T	(pg. 250)	MC-22T
CA-202T	(pg. 250)	MC-22T
CA-5213	(pg. 250)	MC-25-3-2
CA-5213-V2-L	(pg. 250)	MC-25-3-2
CA-5214	(pg. 250)	MC-25-4-2
CA-5214-V2-L	(pg. 250)	MC-25-4-2
CA-5214-V4-L	(pg. 250)	MC-25-4-4
ISCA-101	(pg. 235)	MC-10
ISCA-101-D	(pg. 235)	MC-10D
ISCA-101-L	(pg. 235)	MC-10L
ISCA-101-R	(pg. 235)	MC-10R
ISCA-101-AUX	(pg. 238)	MC-10-27
ISCA-101-L-AUX	(pg. 238)	MC-10L-27
ISCA-101-R-AUX	(pg. 238)	MC-10R-27
ISCA-102	(pg. 241)	MC-10-HDX
ISCA-102-L	(pg. 241)	MC-10L-HDX
ISCA-102-R	(pg. 241)	MC-10R-HDX
ISCA-102-D	(pg. 241)	MC-10D-HDX
ISCA-121	(pg. 242)	MC-12*
ISCA-121-D	(pg. 242)	MC-12D*
ISCA-122	(pg. 242)	MC-12-HDX
ISCA-122-D	(pg. 242)	MC-12D-HDX
ISCA-131-L	(pg. 244)	MC-13L
ISCA-131-R	(pg. 244)	MC-13R
ISCA-131-2	(pg. 244)	MC-13-2
ISCA-131-D	(pg. 244)	MC-13D
ISCA-132	(pg. 244)	MC-13-HDX
ISCA-132-D	(pg. 244)	MC-13D-HDX
ISCA-141	(pg. 246)	MC-14
ISCA-141-3	(pg. 246)	MC-14-3-V2
ISCA-141-4-V2	(pg. 246)	MC-14-4-V2
ISCA-141-4-V4	(pg. 246)	MC-14-4-V4
ISCA-151	(pg. 248)	MC-15
ISCA-151-L	(pg. 248)	MC-15L
ISCA-151-R	(pg. 248)	MC-15R
ISCA-151-D	(pg. 248)	MC-15D
ISCA-550	(pg. 264)	MC-60
ISCA-560	(pg. 264)	MC-60

WATER CLOSET CARRIERS OPTIONAL VARIATIONS

WATTS		MIFAB
CA-1	(pg. 365, 366)	-01
CA-100-EXT	(pg. 365, 366)	-10
CA-FACEPLATE	(pg. 365, 366)	MC-10-PFP0Z
CAP-NUTS	(pg. 365, 366)	CAP-NUTS
-M1	(pg. 365, 366)	Standard
-M2	(pg. 365, 366)	-12
-M2W	(pg. 365, 366)	-19
-M3	(pg. 365, 366)	-CI-8
-M4	(pg. 365, 366)	-CI-12
-M5	(pg. 365, 366)	-CI-12
-M10	(pg. 365, 366)	-13
-M11	(pg. 365, 366)	-1
-M12	(pg. 365, 366)	Std
-M14	(pg. 365, 366)	-16
-M15	(pg. 365, 366)	-15
-M16	(pg. 365, 366)	-14
-M17	(pg. 365, 366)	-11

Design and dimensions are subject to modification. Prices do not include applicable taxes. Visit **www.mifab.com** for the most recent product information.
MIFAB®, Inc., 1321 West 119th Street, Chicago, Illinois 60643-5109, USA Toll Free: 1-800-465-2736 • Fax: 1-773-341-3049
All sales subject to MIFAB's® Terms & Warranties. Please refer to inside front cover. sales@mifab.com • Canada Toll Free: 1-800-387-3880

-M18	(pg. 365, 366)	-12
-M19	(pg. 365, 366)	-21
-M20	(pg. 365, 366)	-20
-M21	(pg. 365, 366)	-23
-M22	(pg. 365, 366)	-24
-M23	(pg. 365, 366)	-25
-M24	(pg. 365, 366)	-26
-M30	(pg. 365, 366)	-30
-MA	(pg. 365, 366)	-28
-WC	(pg. 365, 366)	Std

LAVATORY, URINAL, SINK CARRIERS

WATTS		MIFAB
CA-300	(pg. 252)	MC-31
CA-311	(pg. 252)	MC-31
CA-321	(pg. 252)	MC-32
CA-321-1	(pg. 252)	MC-32
CA-321-3	(pg. 253)	MC-33-2
CA-323-N	(pg. 264)	MC-61-N
CA-323-T	(pg. 264)	MC-61-T
CA-323-2N	(pg. 264)	MC-61-N
CA-323-2T	(pg. 264)	MC-61-T
CA-361	(pg. 254)	MC-38
CA-362	(pg. 254)	MC-38D
CA-400	(pg. 255)	MC-40
CA-401	(pg. 255)	MC-40
CA-401-D	(pg. 255)	MC-40D
CA-401-M-60	(pg. 255)	MC-40-G
CA-411	(pg. 256)	MC-41
CA-411D	(pg. 257)	MC-41D
CA-411-D-WC	(pg. 260)	MC-42D
CA-411-M-54	(pg. 256)	MC-41-E2
CA-411-M-60	(pg. 256)	MC-41-G
CA-411-WC	(pg. 259)	MC-42
CA-420	(pg. 252)	MC-31
CA-421	(pg. 252)	MC-31
CA-421-D	(pg. 252)	MC-31D
CA-421-2	(pg. 252)	MC-32
CA-421-2D	(pg. 252)	MC-32D
CA-421-5	(pg. 252)	MC-31-C
CA-421-6	(pg. 252)	MC-32-C
CA-421-HFH	(pg. 252)	MC-31-HDH
CA-431-1	(pg. 253)	MC-33
CA-451	(pg. 256)	MC-55
CA-452	(pg. 264)	MC-56
CA-460	(pg. 261)	MC-51
CA-461	(pg. 262)	MC-53
CA-462	(pg. 261)	MC-51
CA-465	(pg. 262)	MC-51-LP
CA-466	(pg. 262)	MC-51-LP
CA-480	(pg. 254)	MC-36
CA-481	(pg. 254)	MC-36
CA-481-2	(pg. 254)	MC-36-2
CA-482	(pg. 254)	MC-38D
CA-482-2	(pg. 254)	MC-37
CA-501	(pg. 255)	MC-40
CA-501-M60	(pg. 255)	MC-40-G
CA-501-M61	(pg. 255)	MC-40-F
CA-501-D	(pg. 255)	MC-40D
CA-501-1	(pg. 253)	MC-34
CA-501-2	(pg. 252)	MC-32
CA-501-3	(pg. 253)	MC-33-2
CA-531	(pg. 254)	MC-35
CA-531-1	(pg. 254)	MC-35
CA-550	(pg. 264)	MC-61-T
CA-550-N	(pg. 264)	MC-61-N
CA-550-3	(pg. 264)	MC-62-3-V2
CA-550-3-V2-L	(pg. 264)	MC-62-3-V2
CA-550-4-V2	(pg. 264)	MC-62-4-V2
CA-550-4-V2-L	(pg. 264)	MC-62-4-V2
CA-550-4-V4	(pg. 264)	MC-62-4-V4
CA-550-4-V4-L	(pg. 264)	MC-62-4-V4
TCA-411	(pg. 258)	MC-41-TR
TCA-411-D-WC	(pg. 258)	MC-41-TR
TCA-440	(pg. 258)	MC-41-TR
TCA-450	(pg. 258)	MC-41-TR-ADA
WCA-411	(pg. 256)	MC-41

CA-300 TO CA-700 OPTIONAL VARIATIONS

WATTS		MIFAB
-M51	(pg. 365, 366)	-A
-M52	(pg. 365, 366)	-A
-M53	(pg. 365, 366)	-14
-M54	(pg. 365, 366)	-E2
-M55	(pg. 365, 366)	-E4
-M56	(pg. 365, 366)	-E6
-M57	(pg. 365, 366)	"X"
-M58	(pg. 365, 366)	"X"
-M59	(pg. 365, 366)	-B
-M60	(pg. 365, 366)	-G
-M61	(pg. 365, 366)	-G
-M62	(pg. 365, 366)	-20
-WC	(pg. 365, 366)	Standard

CLEANOUTS

WATTS		MIFAB
CO-100-C-R	(pg. 168)	C1100-C-R*
CO-100-C-R-1	(pg. 168)	C1100-C-R-1*
CO-100-C-R-3	(pg. 168)	C1100-C-R-3*
CO-100-C-RC	(pg. 169)	C1100-C-RC*
CO-100-C-RC-1	(pg. 169)	C1100-C-RC-1*
CO-100-C-RX	(pg. 172)	C1100-C-XR*
CO-100-C-RX-1	(pg. 172)	C1100-C-XR-1*
CO-100-C-RX-4	(pg. 172)	C1100-C-XR-4*
CO-100-C-S	(pg. 170)	C1100-C-S*
CO-100-C-S-1	(pg. 170)	C1100-C-S-1*
CO-100-C-S-3	(pg. 170)	C1100-C-S-3*
CO-100-C-T	(pg. 170)	C1100-C-T*
CO-100-C-T-1	(pg. 170)	C1100-C-T-1*
CO-100-C-TS	(pg. 171)	C1100-C-TS*
CO-100-C-TS-1	(pg. 171)	C1100-C-TS-1*
CO-100-C-U	(pg. 171)	C1100-C-UR*
CO-100-C-U-1	(pg. 171)	C1100-C-UR-1*
CO-100-C-US	(pg. 172)	C1100-C-US*
CO-100-C-US-1	(pg. 172)	C1100-C-US-1*
CO-200	(pg. 176)	C1230
CO-200-1	(pg. 176)	C1230-1
CO-200-4	(pg. 176)	C1230-4
CO-200-50	(pg. 176)	C1230-4
CO-200-60	(pg. 176)	C1230-30
CO-200-61	(pg. 176)	C1230-31
CO-200-63	(pg. 176)	C1230-WF
CO-200-63-1	(pg. 176)	C1230-WF-1
CO-200-R	(pg. 168)	C1100-R
CO-200-R-1	(pg. 168)	C1100-R-1
CO-200-R-3	(pg. 168)	C1100-R-3
CO-200-RC	(pg. 169)	C1100-RC
CO-200-RC-1	(pg. 169)	C1100-RC-1
CO-200-RFC7	(pg. 169)	C1100-RFC7-3
CO-200-RX	(pg. 172)	C1100-XR
CO-200-RX-1	(pg. 172)	C1100-XR-1
CO-200-RX-3	(pg. 172)	C1100-XR-3
CO-200-RX-4	(pg. 172)	C1100-XR-4
CO-200-S	(pg. 170)	C1100-S
CO-200-S-1	(pg. 170)	C1100-S-1
CO-200-SX	(pg. 170)	C1100-S-3
CO-200-SX-4	(pg. 170)	C1100-S-4
CO-200-T	(pg. 170)	C1100-T
CO-200-T-1	(pg. 170)	C1100-T-1
CO-200-TS	(pg. 171)	C1100-TS
CO-200-TS-1	(pg. 171)	C1100-TS-1
CO-200-U	(pg. 171)	C1100-UR
CO-200-U-1	(pg. 171)	C1100-UR-1
CO-200-US	(pg. 172)	C1100-US
CO-200-US-1	(pg. 172)	C1100-US-1
CO-260	(pg. 175)	C1228
CO-260-1	(pg. 175)	C1228-1
CO-270	(pg. 176)	C1238
CO-300-MF	(pg. 178)	C1300-MF
CO-300-MF-1	(pg. 178)	C1300-MF-3
CO-300-MF-4	(pg. 178)	C1300-MF-4
CO-300-R	(pg. 177)	C1300-R
CO-300-R6	(pg. 177)	C1300-R6-1
CO-300-R6-1	(pg. 177)	C1300-R6-1
CO-300-R8	(pg. 177)	C1300-R9
CO-300-R8-1	(pg. 177)	C1300-R9-1
CO-300-R9	(pg. 177)	C1300-R9
CO-300-R9-1	(pg. 177)	C1300-R9-1
CO-300-S	(pg. 177)	C1300-S
CO-300-S6	(pg. 177)	C1300-S7
CO-300-S6-1	(pg. 177)	C1300-S7-1
CO-300-S7-1	(pg. 177)	C1300-S7-1
CO-300-S8	(pg. 177)	C1300-S9
CO-300-S8-1	(pg. 177)	C1300-S9-1
CO-300-S9-1	(pg. 177)	C1300-S9-1
CO-300-S9-50	(pg. 177)	C1300-S9-4
CO-300-S12	(pg. 177)	C1300-S12
CO-300-S12-1	(pg. 177)	C1300-S12-1
CO-300-S12-50	(pg. 177)	C1300-S12-4
CO-300-U	(pg. 177)	C1300-UR
CO-300-U-1	(pg. 177)	C1300-UR-1
CO-300-US	(pg. 177)	C1300-US
CO-300-US-1	(pg. 177)	C1300-US-1
CO-380	(pg. 182)	C1450
CO-380-RD	(pg. 183)	C1450-RD
CO-390-E	(pg. 176)	C1230
CO-390-E-1	(pg. 176)	C1230-1
CO-410	(see CLPB)	C234-TS-1
CO-440	(pg. 180)	C1440
CO-440-A	(pg. 180)	C1440
CO-440-RD	(pg. 181)	C1440-RD
CO-450	(pg. 182)	C1450
CO-450-RD	(pg. 183)	C1450-RD
CO-450-RD-60	(pg. 183)	C1450-RD-30
CO-450-RD-61	(pg. 183)	C1450-RD-31
CO-450-S	(pg. 183)	C1450-S
CO-450-S-1	(pg. 183)	C1450-S-1
CO-450-S-3	(pg. 183)	C1450-S-1
CO-450-S-60-1	(pg. 183)	C1450-S-30-1
CO-450-S-60-3	(pg. 183)	C1450-S-30-1
CO-450-S-61-1	(pg. 183)	C1450-S-31-1
CO-450-S-61-3	(pg. 183)	C1450-S-31-1
CO-450-60	(pg. 182)	C1450-30
CO-450-61	(pg. 182)	C1450-31
CO-460	(pg. 184)	C1460
CO-460-RD	(pg. 185)	C1460-RD
CO-460-S	(pg. 185)	C1460-S
CO-460-S-1	(pg. 185)	C1460-S-1
CO-460-S7-1	(pg. 185)	C1460-S7-1
CO-480	(pg. 178)	C1400
CO-480-R	(pg. 178)	C1400-R
CO-480-RD	(pg. 179)	C1400-RD
CO-480-RD4.5	(pg. 179)	C1400-RD4
CO-480-RD6	(pg. 179)	C1400-RD6
CO-480-RD6.5	(pg. 179)	C1400-RD6
CO-480-RD8	(pg. 179)	C1400-RD8
CO-480-RD9	(pg. 179)	C1400-RD10
CO-480-RD11	(pg. 179)	C1400-RD10
CO-480-R6-1	(pg. 178)	C1400-R6-1
CO-480-R8-1	(pg. 178)	C1400-R9-1
CO-480-R9-1	(pg. 178)	C1400-R9-1
CO-480-S	(pg. 178)	C1400-S
CO-480-S7-1	(pg. 178)	C1400-S7-1
CO-480-S9-1	(pg. 178)	C1400-S9-1
CO-480-S12-1	(pg. 178)	C1400-S12-1
CO-590	(pg. 179)	C1430
CO-590-R	(pg. 179)	C1430-RD
CO-590-RD	(pg. 179)	C1430-RD
CO-1100-C-R	(pg. 168)	C1000-C-R-3*
CO-1100-C-R-3	(pg. 168)	C1000-C-R-3*
CO-1100-C-S	(pg. 168)	C1000-C-S-3*
CO-1100-C-S-3	(pg. 168)	C1000-C-S-3*
CO-1200-R	(pg. 168)	C1000-R-3
CO-1200-RX	(pg. 168)	C1000-R-3
CO-1200-S	(pg. 168)	C1000-S-3
CO-1200-SX	(pg. 168)	C1000-S-3
CO-1200-R	(pg. 168)	C1000-R-3
CO-1200-RX	(pg. 168)	C1000-R-3

"X" Contact MIFAB

CLEANOUT OPTIONAL VARIATIONS

WATTS			MIFAB
-1	Nickel Bronze	(pg. 365, 366)	-1
-2	Polished Bronze	(pg. 365, 366)	-2
-3	Stainless Steel	(pg. 365, 366)	-3
-4	Ductile Iron	(pg. 365, 366)	-4
-6	Vandal proof	(pg. 365, 366)	-6
-9	Hinged cover	(pg. 365, 366)	-9
-13	All galvanized	(pg. 365, 366)	-13
-28	304 Stainless Steel	(pg. 365, 366)	-28
-29	316 Stainless Steel	(pg. 365, 366)	-29
-34	Secondary closure Plug	(pg. 365, 366)	-34
-34B	Brass threaded plug	(pg. 365, 366)	-34B
-34G	ABS expansion plug	(pg. 365, 366)	-34
-60	PVC body	(pg. 365, 366)	-30
-61	ABS body	(pg. 365, 366)	-31
-85	Special word on top	(pg. 365, 366)	-95
-87	Longer screw	(pg. 365, 366)	-87
-100	Client logo	(pg. 365, 366)	-95
-113	M3M epoxy	(pg. 365, 366)	-11
P	Push on connection	(pg. 365, 366)	P
T	Female threaded conn	(pg. 365, 366)	T
X	Inside caulk connection	(pg. 365, 366)	X
-Z	Elastomeric flange	(pg. 365, 366)	-Z

FLOOR AND AREA DRAINS

WATTS		MIFAB
FD-100	(pg. 37)	F1100-C*
FD-100-A	(pg. 37)	F1100-C*
FD-100-AS	(pg. 38)	F1100-C-AS*
FD-100-A5	(pg. 37)	F1100-C-5-1*
FD-100-A6	(pg. 37)	F1100-C-6-1*
FD-100-A7	(pg. 37)	F1100-C-7-1*
FD-100-A8	(pg. 37)	F1100-C-8-1*
FD-100-A10	(pg. 37)	F1100-C-10-1*
FD-100-B	(pg. 46)	F1100-C-X-1*
FD-100-B5	(pg. 46)	F1100-C-X5-1*
FD-100-B5-50	(pg. 37)	F1100-C-5-4*
FD-100-B6	(pg. 46)	F1100-C-X6-1*
FD-100-B8	(pg. 46)	F1100-C-X8-1*
FD-100-B10	(pg. 37)	F1100-C-10-3*
FD-100-C STD	(pg. 46)	F1100-C-X-1*
FD-100-C-A	(pg. 37)	F1100-C*
FD-100-C-AS	(pg. 38)	F1100-C-AS*
FD-100-C-A5-1	(pg. 37)	F1100-C-5-1*
FD-100-C-A6-1	(pg. 37)	F1100-C-6-1*
FD-100-C-A7-1	(pg. 37)	F1100-C-7-1*
FD-100-C-A8-1	(pg. 37)	F1100-C-8-1*
FD-100-C-DD	(pg. 38)	F1100-C-DD*
FD-100-C-DD-1	(pg. 38)	F1100-C-DD-1*
FD-100-C-DD-50	(pg. 38)	F1100-C-DD-50*
FD-100-C-EF	(pg. 39)	F1100-C-EF*
FD-100-C-EF-1	(pg. 39)	F1100-C-EF-1*
FD-100-C-EF-50	(pg. 39)	100-C-EF-50*
FD-100-C-EG	(pg. 39)	F1100-C-EG*
FD-100-C-EG-1	(pg. 39)	F1100-C-EG-1*
FD-100-C-EG-50	(pg. 39)	F1100-C-EG-50*
FD-100-C-ER	(pg. 40)	F1100-C-ER*
FD-100-C-ER5-1	(pg. 40)	F1100-C-ER7-1*
FD-100-C-ER7-1	(pg. 40)	F1100-C-ER7-1*
FD-100-C-ER9-1	(pg. 40)	F1100-C-ER9-1*
FD-100-C-FC	(pg. 40)	F1100-C-FC*
FD-100-C-FC7-1	(pg. 40)	F1100-C-FC7-1*
FD-100-C-FC9-1	(pg. 40)	F1100-C-FC9-1*
FD-100-C-FT6	(pg. 41)	F1100-C-FT6*
FD-100-C-FT6-1	(pg. 41)	F1100-C-FT6-1*
FD-100-C-K	(pg. 42)	F1100-C-K*
FD-100-C-K-1	(pg. 42)	F1100-C-K-1*
FD-100-C-L	(pg. 47)	F1100-C-XS-1*
FD-100-C-L5-1	(pg. 47)	F1100-C-XS5-1*
FD-100-C-L6-1	(pg. 47)	F1100-C-XS6-1*
FD-100-C-L8-1	(pg. 47)	F1100-C-XS8-1*
FD-100-C-M	(pg. 43)	F1100-C-S*
FD-100-C-M5-1	(pg. 43)	F1100-C-S*
FD-100-C-M6-1	(pg. 43)	F1100-C-S6-1*
FD-100-C-M8-1	(pg. 43)	F1100-C-S8-1*
FD-100-C-RS	(pg. 43)	F1100-C-RS*
FD-100-H	(pg. 47)	F1100-Z
FD-100-C-H	(pg. 47)	F1100-C-Z*
FD-100-C-RS-48-1	(pg. 43)	F1100-C-RS48-1*
FD-100-C-RS-412-1	(pg. 43)	F1100-C-RS412-1*
FD-100-C-RS-517-1	(pg. 43)	F1100-C-RS517-3*
FD-100-C-VD	(pg. 45)	F1100-C-VD*
FD-100-C-VS	(pg. 44)	F1100-C-SD6*
FD-100-C-W	(pg. 46)	F1100-C-W*
FD-100-C-WD	(pg. 46)	F1100-C-W*
FD-100-C-WD-1	(pg. 46)	F1100-C-WD-3*
FD-100-C-5-1	(pg. 46)	F1100-C-X5-1*
FD-100-C-5-3	(pg. 46)	F1100-C-X5-1*
FD-100-C-5-4	(pg. 37)	F1100-C-5-4*
FD-100-C-6-1	(pg. 46)	F1100-C-X6-1*
FD-100-C-6-3	(pg. 46)	F1100-C-X6-1*
FD-100-C-8-1	(pg. 46)	F1100-C-X8-1*
FD-100-DD	(pg. 38)	F1100-C-DD*
FD-100-DD-1	(pg. 38)	F1100-C-DD-1*
FD-100-DD-50	(pg. 38)	F1100-C-DD-50*
FD-100-EF	(pg. 39)	F1100-C-EF*
FD-100-EF-1	(pg. 39)	F1100-C-EF-1*
FD-100-EF-50	(pg. 39)	F1100-C-EF-50*
FD-100-EG	(pg. 39)	F1100-C-EG*
FD-100-EG-1	(pg. 39)	F1100-C-EG-1*
FD-100-EG-50	(pg. 39)	F1100-C-EG-50*
FD-100-ER	(pg. 40)	F1100-C-ER*
FD-100-ER5	(pg. 40)	F1100-C-ER7*
FD-100-ER7	(pg. 40)	F1100-C-ER7*
FD-100-FC	(pg. 40)	F1100-C-FC7*
FD-100-FT6	(pg. 41)	F1100-C-FT6*
FD-100-K	(pg. 42)	F1100-C-K*
FD-100-L	(pg. 47)	F1100-C-XS-1*
FD-100-L5	(pg. 47)	F1100-C-XS5-1*
FD-100-L6	(pg. 47)	F1100-C-XS6-1*
FD-100-L8	(pg. 47)	F1100-C-XS8-1*
FD-100-M	(pg. 43)	F1100-C-S*
FD-100-M5	(pg. 43)	F1100-C-S5-1*
FD-100-M6	(pg. 43)	F1100-C-S6-1*
FD-100-M8	(pg. 43)	F1100-C-S8-1*
FD-100-RS	(pg. 43)	F1100-C-RS*
FD-100-RS48	(pg. 43)	F1100-C-RS48-1*
FD-100-RS412	(pg. 43)	F1100-C-RS412-1*
FD-100-RS517	(pg. 43)	F1100-C-RS517-3*
FD-100-VD	(pg. 45)	F1100-C-VD*
FD-100-VS	(pg. 44)	F1100-C-SD6
FD-100-WD	(pg. 46)	F1100-C-WD-3*
FD-160-C	(pg. 48)	F1100-C-90*
FD-160-C-A5-1	(pg. 48)	F1100-C-5-1-90*
FD-160-C-A6-1	(pg. 48)	F1100-C-6-1-90*
FD-160-C-A7-1	(pg. 48)	F1100-C-7-1-90*
FD-160-C-A8-1	(pg. 48)	F1100-C-8-1-90*
FD-174	(pg. 54)	F1170
FD-200	(pg. 46)	F1100-X-1
FD-200-A	(pg. 37)	F1100-1
FD-200-AS	(pg. 38)	F1100-AS-1
FD-200-A5	(pg. 37)	F1100-5-1
FD-200-A6	(pg. 37)	F1100-6-1
FD-200-A7	(pg. 37)	F1100-7-1
FD-200-A8	(pg. 37)	F1100-8-1
FD-200-A10	(pg. 37)	F1100-10-1
FD-200-A5-1	(pg. 37)	F1100-5-1
FD-200-A6-1	(pg. 37)	F1100-6-1
FD-200-A7-1	(pg. 37)	F1100-7-1
FD-200-A8-1	(pg. 37)	F1100-8-1
FD-200-B	(pg. 46)	F1100-X-1
FD-200-B5	(pg. 46)	F1100-X5-1
FD-200-B5-4	(pg. 37)	F1100-5-4
FD-200-B5-50	(pg. 37)	F1100-5-4
FD-200-B6	(pg. 46)	F1100-X6-1
FD-200-B8	(pg. 46)	F1100-X8-1
FD-200-DD	(pg. 38)	F1100-DD
FD-200-DD-1	(pg. 38)	F1100-DD-1
FD-200-DD-50	(pg. 38)	F1100-DD-50
FD-200-EF	(pg. 39)	F1100-EF
FD-200-EF-1	(pg. 39)	F1100-EF-1
FD-200-EF-50	(pg. 39)	F1100-EF-50
FD-200-EG	(pg. 39)	F1100-EG
FD-200-EG-1	(pg. 39)	F1100-EG-1
FD-200-EG-50	(pg. 39)	F1100-EG-50
FD-200-ER	(pg. 40)	F1100-ER
FD-200-ER5	(pg. 40)	F1100-ER7-1
FD-200-ER5-1	(pg. 40)	F1100-ER7-1
FD-200-ER7	(pg. 40)	F1100-ER7-1
FD-200-ER7-1	(pg. 40)	F1100-ER7-1
FD-200-ER9-1	(pg. 40)	F1100-ER9-1
FD-200-FC	(pg. 40)	F1100-FC
FD-200-FC7-1	(pg. 40)	F1100-FC7-1
FD-200-FC9-1	(pg. 40)	F1100-FC9-1
FD-200-FT6	(pg. 41)	F1100-FT6
FD-200-FT6-1	(pg. 41)	F1100-FT6-1
FD-200-H	(pg. 47)	F1100-Z
FD-200-K	(pg. 42)	F1100-K
FD-200-K-1	(pg. 42)	F1100-K-1
FD-200-L	(pg. 47)	F1100-XS-1
FD-200-L5	(pg. 47)	F1100-XS5-1
FD-200-L6	(pg. 47)	F1100-XS6-1
FD-200-L8	(pg. 47)	F1100-XS8-1
FD-200-L5-1	(pg. 47)	F1100-XS5-1
FD-200-L6-1	(pg. 47)	F1100-XS6-1
FD-200-L8-1	(pg. 47)	F1100-XS8-1
FD-200-M	(pg. 43)	F1100-S
FD-200-M5	(pg. 43)	F1100-S5-1
FD-200-M6	(pg. 43)	F1100-S6-1
FD-200-M8	(pg. 43)	F1100-S8-1
FD-200-M5-1	(pg. 43)	F1100-S5-1
FD-200-M6-1	(pg. 43)	F1100-S6-1
FD-200-M8-1	(pg. 43)	F1100-S8-1
FD-200-RS	(pg. 43)	F1100-RS
FD-200-RS48	(pg. 43)	F1100-RS48-1
FD-200-RS-48-1	(pg. 43)	F1100-RS48-1
FD-200-RS412	(pg. 43)	F1100-RS412-1
FD-200-RS-412-1	(pg. 43)	F1100-RS412-1
FD-200-RS517	(pg. 43)	F1100-RS517-3
FD-200-RS-517-1	(pg. 43)	F1100-RS517-3
FD-200-VD	(pg. 45)	F1100-VD
FD-200-VS	(pg. 44)	F1100-SD6
FD-200-W	(pg. 46)	F1100-W-3
FD-200-W-1	(pg. 46)	F1100-W-3
FD-200-WD	(pg. 46)	F1100-WD-3
FD-200-WD-1	(pg. 46)	F1100-WD-3
FD-200-5-1	(pg. 46)	F1100-X5-1
FD-200-5-3	(pg. 37)	F1100-5-3
FD-200-5-4	(pg. 37)	F1100-5-4
FD-200-6-1	(pg. 46)	F1100-X6-1
FD-200-6-3	(pg. 37)	F1100-6-3
FD-200-8-1	(pg. 46)	F1100-X8-1
FD-220-C	(pg. 52)	F1120-C*
FD-220-C-A5-1	(pg. 52)	F1120-C-5-1*
FD-220-C-A6-1	(pg. 52)	F1120-C-6-1*
FD-220-C-A7-1	(pg. 52)	F1120-C-7-1*
FD-220-C-A8-1	(pg. 52)	F1120-C-8-1*
FD-230-A	(pg. 52)	F1130C
FD-230-A5	(pg. 52)	F1130C-5-1
FD-230-A6	(pg. 52)	F1130C-6-1
FD-230-C-A5	(pg. 52)	F1130C-5-1
FD-230-C-A6	(pg. 52)	F1130C-6-1
FD-230-C-A	(pg. 52)	F1130C
FD-230-C-A5-1	(pg. 52)	F1130C-5-1
FD-230-C-A6-1	(pg. 52)	F1130C-6-1
FD-230-C-A7-1	(pg. 52)	F1130C-7-1
FD-240	(pg. 53)	F1160

"X" Contact MIFAB

FLOOR DRAIN ADJUSTABLE STRAINERS

WATTS		MIFAB
STANDARD 5-1	(pg. 51)	X5-1
STANDARD 5-4	(pg. 50)	5-4
STANDARD 6-1	(pg. 51)	X6-1
STANDARD 8-1	(pg. 51)	X8-1
A5-1	(pg. 50)	5-1
A6-1	(pg. 50)	6-1
A7-1	(pg. 50)	7-1
A8-1	(pg. 50)	8-1
AS 4X5X4-1	(pg. 50)	AS-1
DD-1	(pg. 50)	DD-1
DD-50	(pg. 50)	DD-50
EF4-1	(pg. 50)	EF4-1
EF4-50	(pg. 50)	EF4-50
EF6-1	(pg. 50)	EF6-1
EF6-50	(pg. 50)	EF6-50
EG-1	(pg. 50)	EG-1
EG-50	(pg. 50)	EG-50

Design and dimensions are subject to modification. Prices do not include applicable taxes. Visit **www.mifab.com** for the most recent product information.
MIFAB®, Inc., 1321 West 119th Street, Chicago, Illinois 60643-5109, USA Toll Free: 1-800-465-2736 • Fax: 1-773-341-3049
All sales subject to MIFAB's® Terms & Warranties. Please refer to inside front cover. sales@mifab.com • Canada Toll Free: 1-800-387-3880

ER5-1	(pg. 50)	ER5-1
ER7-1	(pg. 50)	ER7-1
ER9-1	(pg. 50)	ER9-1
FC7-1	(pg. 50)	FC7-1
FC9-1	(pg. 50)	FC9-1
FT6-1	(pg. 50)	FT6-1
K5-1	(pg. 50)	K5-1
L5-1	(pg. 51)	XS5-1
L6-1	(pg. 51)	XS6-1
L8-1	(pg. 51)	XS8-1
M5-1	(pg. 51)	S5-1
M6-1	(pg. 51)	S6-1
M8-1	(pg. 51)	S8-1
RS48-1	(pg. 51)	RS48-1
RS412-1	(pg. 51)	RS412-1
RS517-1	(pg. 51)	RS517-3
W-1	(pg. 51)	W-3
WD-1	(pg. 51)	WD-3

HEAVY DUTY FLOOR AND AREA DRAINS

WATTS		MIFAB
FD-300	(pg. 56)	F1300-C*
FD-300-1	(pg. 56)	F1300-C-1*
FD-300-4	(pg. 56)	F1300-C-4*
FD-310	(pg. 56)	F1300-C*
FD-310-1	(pg. 56)	F1300-C-1*
FD-310-4	(pg. 56)	F1300-C-4*
FD-320	(pg. 57)	F1320-C*
FD-320-1	(pg. 57)	F1320-C-1*
FD-320-4	(pg. 57)	F1320-C-4*
FD-320-25	(pg. 57)	F1320-C-25*
FD-320-25-1	(pg. 57)	F1320-C-25-1*
FD-320-Y	(pg. 57)	F1320-C-Y-14*
FD-320-Y-1	(pg. 57)	F1320-C-Y-14-1*
FD-320-Y-4	(pg. 57)	F1320-C-Y-14-4*
FD-320-SET	(pg. 58)	F1320-TFB
FD-320-Y-SET	(pg. 58)	F1320-TFB
FD-330	(pg. 67)	F1420-C*
FD-330-Y	(pg. 67)	F1420-C-Y*
FD-330-Y-1	(pg. 67)	F1420-C-Y-1*
FD-330-1	(pg. 67)	F1420-C-1*
FD-330-4	(pg. 67)	F1420-C-4*
FD-340	(pg. 60)	F1340
FD-340-Y	(pg. 60)	F1340-Y
FD-340-Y-1	(pg. 60)	F1340-Y-1
FD-340-Y-4	(pg. 60)	F1340-Y-4
FD-340-1	(pg. 60)	F1340-1
FD-340-4	(pg. 60)	F1340-4
FD-340-67	(pg. 75)	F1540
FD-340-SET	(pg. 61)	F1340-TFB
FD-340-Y-SET	(pg. 61)	F1340-TFB
FD-350	(pg. 63)	F1350
FD-350-Y-36	(pg. 64)	F1350-Y-36-4
FD-350-1	(pg. 63)	F1350-1
FD-350-4	(pg. 63)	F1350-4
FD-360	(pg. 65)	F1360
FD-360-1	(pg. 65)	F1360-1
FD-360-4	(pg. 65)	F1360-4
FD-360-Y	(pg. 65)	F1360
FD-370	(pg. 66)	F1370
FD-370-1	(pg. 66)	F1370-1
FD-370-4	(pg. 66)	F1370-4
FD-380	(pg. 55)	F1230-WF
FD-390	(pg. 56)	F1300-14
FD-390-E	(pg. 55)	F1230
FD-390-E-1	(pg. 55)	F1230-1
FD-390-E-4	(pg. 55)	F1230-4
FD-390-E-63	(pg. 55)	F1230-WF
FD-390-E-63-1	(pg. 55)	F1230-WF-1
FD-390-1	(pg. 56)	F1300-14-1
FD-390-4	(pg. 56)	F1300-14-4
FD-410	(pg. 76)	F1570
FD-410-A	(pg. 76)	F1570-A-4
FD-410-B	(pg. 76)	F1570-B-4
FD-410-C	(pg. 76)	F1570-C-4
FD-410-D	(pg. 76)	F1570-D-4
FD-410-E	(pg. 76)	F1570-E-4
FD-430	(pg. 76)	F1560
FD-430-1	(pg. 76)	F1560-1
FD-430-4	(pg. 76)	F1560-4
FD-440	(pg. 212)	MI-OS
FD-440-12	(pg. 212)	MI-OS-1
FD-440-60	(pg. 212)	MI-OS-2
FD-440-100	(pg. 212)	MI-OS-3
FD-440-200	(pg. 212)	MI-OS-4
FD-450	(pg. 71)	F1460
FD-450-AF	(pg. 71)	F1460
FD-450-AF-1	(pg. 71)	F1460-1
FD-450-AF-4	(pg. 71)	F1460-4
FD-450-F	(pg. 71)	F1460
FD-450-F-1	(pg. 71)	F1460-Y-1
FD-450-F-4	(pg. 71)	F1460-Y-4
FD-450-1	(pg. 71)	F1460-1
FD-460	(pg. 68)	F1440
FD-460-AF	(pg. 68)	F1440
FD-460-AF-1	(pg. 68)	F1440-1
FD-460-AF-4	(pg. 68)	F1440-4
FD-460-F	(pg. 68)	F1440-Y-14
FD-460-F-1	(pg. 68)	F1440-Y-14-1
FD-460-F-4	(pg. 68)	F1440-Y-14-4
FD-460-F-9-46	(pg. 76)	F1560
FD-460-1	(pg. 68)	F1440-1
FD-470-AF-1	(pg. 72)	F1470-3
FD-470-AF-4	(pg. 72)	F1470-4
FD-470-F-1	(pg. 71)	F1460-Q
FD-480-AF	(pg. 70)	F1450
FD-480-AF-1	(pg. 70)	F1450-1
FD-480-AF-4	(pg. 70)	F1450-4
FD-480-F-1	(pg. 69)	F1440-Y-Q
FD-490	(pg. 74)	F1510
FD-490-ATE	(pg. 74)	F1510-80-TE
FD-490-F-4	(pg. 74)	F1510-4
FD-490-F-4-ATE	(pg. 74)	F1510-4-TE
FD-490-F-80	(pg. 74)	F1510-80
FD-490-F-4-TE	(pg. 74)	F1510-4-TE
FD-490-F-4-10	(pg. 74)	F1510-4-TE
FD-490-F-80-ATE	(pg. 74)	F1510-80-TE
FD-490-F-80-TE	(pg. 74)	F1510-80-TE
FD-490-TE	(pg. 75)	F1540-80-TE
FD-500	(pg. 76)	F1560
FD-520	(pg. 77)	F1590-90
FD-520-1	(pg. 77)	F1590-90-3
FD-520-4	(pg. 77)	F1590-90-4
FD-530	(pg. 77)	F1590
FD-530-1	(pg. 77)	F1590-3
FD-530-4	(pg. 77)	F1590-4
FD-540	(pg. 77)	F1580
FD-540-3	(pg. 77)	F1580-3
FD-540-50	(pg. 77)	F1580-4
FD-600	(pg. 78)	F1600-C-X-1*
FD-600-5-1	(pg. 78)	F1600-C-X5-1*
FD-600-5-4	(pg. 78)	F1600-C-5-4*
FD-600-6-1	(pg. 78)	F1600-C-X6-1*
FD-600-8-1	(pg. 78)	F1600-C-X8-1*
FD-600-A5-1	(pg. 78)	F1600-C-5-1*
FD-600-A6-1	(pg. 78)	F1600-C-6-1*
FD-600-A7-1	(pg. 78)	F1600-C-7-1*
FD-600-A8-1	(pg. 78)	F1600-C-8-1*
FD-620	(pg. 78)	F1620-C*
FD-620-1	(pg. 78)	F1620-C-1*
FD-620-4	(pg. 78)	F1620-C-4*
FD-750	(pg. 81)	F1760-FL
FD-750-1	(pg. 81)	F1760-FL-3
FD-750-4	(pg. 81)	F1760-FL-4
FD-760	(pg. 81)	F1760-FL
FD-760-1	(pg. 81)	F1760-FL-1
FD-760-4	(pg. 81)	F1760-FL-1
FD-810	(pg. 60)	F1340-C-Y-5*
FD-820	(pg. 80)	F1650
FD-820-G	(pg. 80)	F1650-G
FD-820-G-1	(pg. 80)	F1650-G-1
FD-820-G-1-10	(pg. 80)	F1650-6-1
FD-820-1	(pg. 80)	F1650-1
FD-820-1-10	(pg. 80)	F1650-6-1
FD-830	(pg. 84)	F1860
FD-860	(pg. 82)	F1810-50
FD-860-PA	(pg. 82)	F1810-50
FD-860-PA-81	(pg. 82)	F1810-81
FD-870	(pg. 82)	F1820
FD-870	(pg. 82)	F1820-81
FD-870-PL	(pg. 83)	F1830-PL
FD-870-PL-1	(pg. 83)	F1830-PL-50
FD-870-P-1	(pg. 83)	F1830-P-50
FD-870-TG	(pg. 84)	F1840
FD-870-TG-1	(pg. 84)	F1840-1
FD-870-TG-3	(pg. 84)	F1840-3
FD-870-TG-4	(pg. 84)	F1840-4
FD-880	(pg. 78)	F1620
FD-900	(pg. 75)	F1540
FD-910	(pg. 75)	F1550
FD-920	(pg. 74)	F1530
FD-940	(pg. 59)	F1330C-5
FD-940-1	(pg. 59)	F1330C-5-1
FD-940-3	(pg. 59)	F1330C-5-3
FD-940-4	(pg. 59)	F1330C-5-4
FD-1030-F	(pg. 53)	F1140C
FD-1030-F-1	(pg. 53)	F1140C-1
FD-1030-F-4	(pg. 53)	F1140C-4
FD-1100-A	(pg. 37)	F1000-C-3*
FD-1100-B5	(pg. 37)	F1000-C-5-3*
FD-1100-B6	(pg. 37)	F1000-C-6-3*
FD-1100-C	(pg. 37)	F1000-C-3*
FD-1100-C-L	(pg. 43)	F1000-C-S5-3*
FD-1100-C-L-5-3	(pg. 43)	F1000-C-S5-3*
FD-1100-C-L-6-3	(pg. 43)	F1000-C-S6-3*
FD-1100-C-5-3	(pg. 37)	F1000-C-5-3*
FD-1100-C-6-3	(pg. 37)	F1000-C-6-3*
FD-1100-L	(pg. 43)	F1000-C-S5-3*
FD-1100-L5	(pg. 43)	F1000-C-S5-3*
FD-1100-L6	(pg. 43)	F1000-C-S6-3*
FD-1100-M	(pg. 43)	F1000-S
FD-920	(pg. 74)	F1530
FD-1160	(pg. 53)	F1160-C*
FD-1200-A	(pg. 37)	F1000-3
FD-1200-B	(pg. 37)	F1000-5-3
FD-1200-6-3	(pg. 37)	F1000-6-3
FD-1200-L/M	(pg. 43)	F1000-S5-3
FD-1200-L-5-3	(pg. 43)	F1000-S5-3
FD-1200-L-6-3	(pg. 43)	F1000-S6-3
FD-1390	(pg. 73)	F1490

FLOOR AREA AND SPECIAL PURPOSE DRAIN OPTIONAL VARIATIONS

WATTS		MIFAB
-1	Nickel bronze	-1
-2	Polished bronze	-2
-3	Stainless steel	-3
-4	Ductile iron	-4
-5	Sediment bucket	-5
-6	Vandal proof	-6
6”	6” No hub outlet	6
-7	Trap seal primer tapping	-7
-8	Backwater valve	-8
-9	Hinged grate	-9
-10	Secured Top	STANDARD
-11	Acid rst.epoxy coating	-11
-12	Galvanized top only	-12
-13	All Galvanized	-13
-14	Non tilt grate	-14
-15	Extension	-15
-16	Square top	-16
-18	Dome grate	-20
-20	Secondary dome strainer	-20
-21	Secondary flat strainer	-21
-22	Less grate	-22
-24	Secured solid cover	-24
-25	Hinged solid NB cover	-25-1
-26	Hinged locking grate	-6
-28	All Stainless Steel(304)	-28
-29	All Stainless Steel (316)	-29
-31	Flange	-33
-32	Anchor Flange & clamp	-32
-34	Closure plug	-34
-35	SS mesh screen bucket	.-35
-36	Garbage can assembly	-36
-38	Solids retaining baffle	-38
-39	Full flow grate	-39
-40	Deck clamp	-40
-41	Sump receiver	-41
-42	Perforated standpipe	-42
-43	Standpipe over 8”	-43
-44	1-1/2” or 2” aux inlets	-44
-48	Chrome plated grate	-48

-49	Chr.Pl. str. Asbly	-49
-50	Cast iron	-50
-60	PVC Body w/socket outlet	-30
-61	ABS Body w/socket outlet	-31
-63	Wood deck floor flange	-WF
-81	Bronze top	-81
-113M	3M epoxy finish	-3M
-B	Sump receiver	-B
-C	Membrane Clamp	-C
-D	Deck Clamp	-D
-F4	4" funnel	-F4
-F4-	4" Nickel bronze funnel	-F4-1
-F4-50	.4" Cast iron funnel	-F4-50
-F6-1	6" nickel bronze funnel	-F6-1
-F6-50	.6" cast iron funnel	-F6-50
-G	4" X 9" funnel	-G
-G-1	4" X 9" NB funnel	-G-1
-G-50	4" X 9" cast iron funnel	-G-50
-H-1	5X17 Oval NB funnel	"X"
-H-50	5X17 Oval CI funnel	"X"
-J-1	6" x 3" NB funnel	-J-1
P	Push on outlet	P
-SO	Side outlet	-90
T	Threaded outlet	T
X	Inside caulk outlet	-X
-Z	Extended wide flange	-Z

SANITARY FLOOR, AREA AND INDIRECT WASTE DRAINS

WATTS		MIFAB
FS-500	(see CLPB)	FS720-30
FS-700	(pg. 107)	FS1950
FS-710	(pg. 97)	FS1520
FS-710-1	(pg. 97)	FS1520-1
FS-710-3	(pg. 97)	FS1520-3
FS-720	(pg. 102)	FS1750
FS-720-1	(pg. 102)	FS1750-1
FS-720-3	(pg. 102)	FS1750-3
FS-730	(pg. 99)	FS1720
FS-730-1	(pg. 99)	FS1720-1
FS-730-3	(pg. 99)	FS1720-3
FS-740	(pg. 100)	FS1730
FS-740-1	(pg. 100)	FS1730-1
FS-740-3	(pg. 100)	FS1730-3
FS-750	(pg. 101)	FS1740
FS-750-1	(pg. 101)	FS1740-1
FS-750-3	(pg. 101)	FS1740-3
FS-760	(pg. 103)	FS1760
FS-760-1	(pg. 103)	FS1760-1
FS-760-3	(pg. 103)	FS1760-3
FS-770	(pg. 98)	FS1530
FS-780	(pg. 106)	FS1920-FL
FS-790	(pg. 106)	FS1930-FL
FS-800	(pg. 64)	F1350-Y-36
FS-850	(pg. 104)	FS1770
FS-890	(pg. 80)	F1670
FS-900	(pg. 105)	FS1790

SANITARY FLOOR, AREA AND INDIRECT WASTE DRAIN OPTIONAL VARIATIONS

WATTS		MIFAB
-F	Anchor flange	-FL
-FC	Anchor fl & clamp	-FLC
-F4-1	.4" Dia. NB Funnel	-F4-1
-F6-1	.6" Dia. NB Funnel	-F6-1
-G-1	4" x 9" oval NB funnel	-G-1
P	Push on outlet	-P
STD	No hub outlet	Standard
X	Inside caulk outlet	-X
-3	SS rim and grate	-3
-5	Sediment bucket	-5
-6	Vandal proof	-6
-7	Trap seal primer tapping	-7
-21	Secondary flat strainer	-21
-22	Less grate	-22
-128	2-1/2" center opening	-51
-150	Half grate	-150
-175	3/4 grate	-175

WALL AND GROUND HYDRANTS

WATTS		MIFAB
HY-300	(pg. 276)	MHY-45
HY-300-3/4	(pg. 276)	MHY-45
HY-300-1	(pg. 276)	MHY-45
HY-300-2	(pg. 276)	MHY-45
HY-330	(pg. 275)	MHY-35
HY-330-3/4	(pg. 275)	MHY-35
HY-330-1	(pg. 275)	MHY-35
HY-420	(pg. 274)	MHY-10
HY-430	(pg. 275)	MHY-30
HY-500	(pg. 280)	MHY-60
HY-500 - 3/4", 1"	(pg. 280)	MHY-60
HY-500 - 1 1/4", 1 ½", 2"	(pg. 280)	MHY-61
HY-600	(pg. 281)	MHY-65
HY-600 - 3/4", 1"	(pg. 281)	MHY-65
HY-600 - 1 1/4", 1 1/2", 2"	(pg. 281)	MHY-66
HY-700	(pg. 276)	MHY-45
HY-700-2	(pg. 276)	MHY-45
HY-725	(pg. 274)	MHY-20
HY-800	(pg. 281)	MHY-68

HYDRANT OPTIONAL VARIATIONS

WATTS		MIFAB
(A-1)	Hose storage box for 3/4 & 1"	-HSB
-K	Cylinder key lock	-K
-VB	Vacuum breaker, 3/4"	Standard
-1	Union elbow inle	"X"
-1"	1" hose connection	-C
-31	Anchor flange 3/4" & 1"	-FL
-32	Anchor flange & clamp for 1 1/4", 1 1/2", 2".	-FLC
-88	Wall clamp	-WC

INTERCEPTORS

WATTS		MIFAB
GE	(pg. 219)	MI-E-G
GE-115	(pg. 219)	MI-E-G-3
GE-120	(pg. 219)	MI-E-G-4
GE-120-L	(pg. 219)	MI-E-G-L-20
GE-125	(pg. 219)	MI-E-G-5
GE-135	(pg. 219)	MI-E-G-6
GE-135-L	(pg. 219)	MI-E-G-L-35
GE-150	(pg. 219)	MI-E-G-7
GE-150-L	(pg. 219)	MI-E-G-L-50
GE-175	(pg. 206)	XL-MI-E-G-0
GE-210	(pg. 206)	XL-MI-E-G-1
GE-215	(pg. 206)	XL-MI-E-G-3
GI-K	(pg. 206)	XL-MI-G
GI-75-K	(pg. 206)	XL-MI-G-0
GI-100	(pg. 205)	MI-G
GI-100-A	(pg. 208)	MI-G-SDH
GI-100-AH	(pg. 208)	MI-G-SDH W/ MI-CSD
GI-100-K	(pg. 206)	XL-MI-G
GI-100-L	(pg. 205)	MI-G-L
GI-100-LA	(pg. 208)	MI-G-L-SDH
GI-104	(pg. 205)	MI-G-0
GI-107	(pg. 205)	MI-G-1
GI-107-A	(pg. 208)	MI-G-SDH-1
GI-107-AH	(pg. 208)	MI-G-SDH-1 W/MI-CSD-7
GI-110	(pg. 205)	MI-G-2
GI-110-A	(pg. 208)	MI-G-SDH-2
GI-110-AH	(pg. 208)	MI-G-SDH-2 W/MI-CSD-10
GI-115	(pg. 205)	MI-G-3
GI-115-A	(pg. 208)	MI-G-SDH-3
GI-115-AH	(pg. 208)	MI-G-SDH-3 W/MI-CSD-15
GI-120	(pg. 205)	MI-G-4
GI-120-A	(pg. 208)	MI-G-SDH-4
GI-120-AH	(pg. 208)	MI-G-SDH-4 W/MI-CSD-20
GI-120-L	(pg. 205)	MI-G-L-20
GI-120-LA	(pg. 208)	MI-G-L-SDH-20
GI-125	(pg. 205)	MI-G-5
GI-125-A	(pg. 208)	MI-G-SDH-5
GI-125-AH	(pg. 208)	MI-G-SDH-5 W/MI-CSD-25
GI-135	(pg. 205)	MI-G-6
GI-135-A	(pg. 208)	MI-G-SDH-6
GI-135-AH	(pg. 208)	MI-G-SDH-6 W/MI-CSD-35
GI-135-L	(pg. 205)	MI-G-L-35
GI-135-LA	(pg. 208)	MI-G-L-SDH-35
GI-150	(pg. 205)	MI-G-7
GI-150-A	(pg. 208)	MI-G-SDH-7
GI-150-AH	(pg. 208)	MI-G-SDH-7 W/MI-CSD-50
GI-150-K	(pg. 206)	XL-MI-G-3
GI-150-L	(pg. 205)	MI-G-L-50
GI-150-LA	(pg. 208)	MI-G-L-SDH-50
GI-175	(pg. 206)	XL-MI-G-0
GI-175-A	(pg. 208)	MI-G-SDH-8
GI-175-AH	(pg. 208)	MI-G-SDH-8 W/MI-CSD-75
GI-200-K	(pg. 206)	XL-MI-G-4
GI-210	(pg. 206)	XL-MI-G-1
GI-215	(pg. 206)	XL-MI-G-3
GI-220	(pg. 206)	XL-MI-G-4
GI-225	(pg. 206)	XL-MI-G-5
GI-230	(pg. 206)	XL-MI-G-6
GI-235	(pg. 206)	XL-MI-G-7
GI-240	(pg. 206)	XL-MI-G-8
GI-250	(pg. 206)	XL-MI-G-9
GI-250-K	(pg. 206)	XL-MI-G-5
GI-260	(pg. 206)	XL-MI-G-10
GI-300-K	(pg. 206)	XL-MI-G-6
GI-400-K	(pg. 206)	XL-MI-G-8
GI-500-K	(pg. 206)	XL-MI-G-9
GX Series	(pg. 206)	XL-MI-G
LI-800	(pg. 216)	MI-LINT
LI-803	(pg. 216)	MI-LINT-1
LI-807	(pg. 216)	MI-LINT-3
LI-810	(pg. 216)	MI-LINT-4
LI-820	(pg. 216)	MI-LINT-6
LI-830	(pg. 216)	MI-LINT-7
LI-840	(pg. 216)	MI-LINT-8
LI-850	(pg. 216)	MI-LINT-9
OE-300	(pg. 220)	MI-E-0
OE-310	(pg. 220)	MI-E-O-A
OE-315	(pg. 220)	MI-E-O-B
OE-320	(pg. 220)	MI-E-O-C
OE-325	(pg. 220)	MI-E-O-1
OE-335	(pg. 220)	MI-E-O-2
OE-350	(pg. 220)	MI-E-O-3
OE-375	(pg. 220)	MI-E-O-4
OE-400	(pg. 220)	MI-E-O
OE-410	(pg. 220)	MI-E-O-5
OE-415	(pg. 220)	MI-E-O-7
OE-500	(pg. 220)	MI-E-O*
OE-515	(pg. 220)	MI-E-O-B*
OE-520	(pg. 220)	MI-E-O-C*
OE-525	(pg. 220)	MI-E-O-1 *
OE-535	(pg. 220)	MI-E-O-2 *
OE-550	(pg. 220)	MI-E-O-3 *
OE-575	(pg. 220)	MI-E-O-4 *
OE-600	(pg. 220)	MI-E-O *
OE-610	(pg. 220)	MI-E-O-5 *
OE-615	(pg. 220)	MI-E-O-7 *
OE-620	(pg. 220)	MI-E-O-8 *
OE-625	(pg. 220)	MI-E-O-9 *
OE-630	(pg. 220)	MI-E-O-10 *
OE-635	(pg. 220)	MI-E-O-11 *
OE-640	(pg. 220)	MI-E-O-12 *
OE-650	(pg. 220)	MI-E-O-14 *
OE-660	(pg. 220)	MI-E-O-15 *

*** WITH EXTERNAL HOLDING TANK**

OI	(pg. 210)	MI-O
OI-K	(pg. 210)	MI-O
OI-10	(pg. 210)	MI-O-A
OI-15	(pg. 210)	MI-O-B

Design and dimensions are subject to modification. Prices do not include applicable taxes. Visit **www.mifab.com** for the most recent product information.
MIFAB®, Inc., 1321 West 119th Street, Chicago, Illinois 60643-5109, USA Toll Free: 1-800-465-2736 • Fax: 1-773-341-3049
All sales subject to MIFAB's® Terms & Warranties. Please refer to inside front cover. sales@mifab.com • Canada Toll Free: 1-800-387-3880

OI	(pg. 210)	MI-O
OI-K	(pg. 210)	MI-O
OI-10	(pg. 210)	MI-O-A
OI-15	(pg. 210)	MI-O-B
OI-20	(pg. 210)	MI-O-C
OI-25	(pg. 210)	MI-O-1
OI-35	(pg. 210)	MI-O-2
OI-50	(pg. 210)	MI-O-3
OI-75-K	(pg. 210)	MI-O-4
OI-100-K	(pg. 210)	MI-O-5
OI-150-K	(pg. 210)	MI-O-7
OI-200-K	(pg. 210)	MI-O-8
OI-250-K	(pg. 210)	MI-O-9
OI-300	(pg. 210)	MI-O
OI-300-K	(pg. 210)	MI-O-10
OI-310	(pg. 210)	MI-O-A
OI-315	(pg. 210)	MI-O-B
OI-320	(pg. 210)	MI-O-C
OI-325	(pg. 210)	MI-O-1
OI-335	(pg. 210)	MI-O-2
OI-350	(pg. 210)	MI-O-3
OI-375	(pg. 210)	MI-O-4
OI-400	(pg. 210)	MI-O
OI-400-K	(pg. 210)	MI-O-12
OI-410	(pg. 210)	MI-O-5
OI-415	(pg. 210)	MI-O-7
OI-420	(pg. 210)	MI-O-8
OI-425	(pg. 210)	MI-O-9
OI-430	(pg. 210)	MI-O-10
OI-435	(pg. 210)	MI-O-11
OI-440	(pg. 210)	MI-O-12
OI-450	(pg. 210)	MI-O-14
OI-460	(pg. 210)	MI-O-15
OI-500	(pg. 211)	MI-O-HU
OI-500-K	(pg. 211)	MI-O-14
OI-515	(pg. 211)	MI-O-HU-B
OI-520	(pg. 211)	MI-O-HU-C
OI-525	(pg. 211)	MI-O-HU-1
OI-535	(pg. 211)	MI-O-HU-2
OI-550	(pg. 211)	MI-O-HU-3
OI-575	(pg. 211)	MI-O-HU-4
OI-600	(pg. 211)	MI-O-HU
OI-610	(pg. 211)	MI-O-HU-5
OI-615	(pg. 211)	MI-O-HU-7
OI-620	(pg. 211)	MI-O-HU-8
OI-625	(pg. 211)	MI-O-HU-9
OI-630	(pg. 211)	MI-O-HU-10
OI-635	(pg. 211)	MI-O-HU-11
OI-640	(pg. 211)	MI-O-HU-12
SA	(pg. 214)	MI-SAND
SI-740	(pg. 212)	MI-SOLID
SI-740-L	(pg. 212)	MI-SOLID-L
SI-742	(pg. 212)	MI-SOLID-S
SI-742-L	(pg. 212)	MI-SOLID-L
SI-750	(pg. 212)	MI-HAIR
SI-762	(pg. 212)	MI-SOLID-LB
WD	(see CLPB)	MCL-G
WD-A	(pg. 208)	MI-G-SDH
WD-AH	(pg. 208)	MI-CSD+MI-G-SDH
WD-L	(see CLPB)	MCL-G-L
WD-LA	(pg. 208)	MI-G-L-SDH

INTERCEPTORS OPTIONAL VARIATIONS

WATTS		MIFAB
-B	Sediment bucket	-SB
-DI	Dual Inlets	-DI
-E	Extension "C" as required	-C
-HDC	Heavy duty cover	-HD
-F	Anchor flange	-FL
-FC	Anchor flange & clamp	-FLM
-MEFC.NH conn.	flow control	Std.
-O	Conn. other than standard	-F
-SS	Stainless Steel	-SS
-T	Threaded connection	-T
-TEFC	Threaded connection external flow control	-FLCT
-THD	Threaded connection	-T
-X	Cover for recessed install	Std

ROOF DRAINS

WATTS		MIFAB
RD-100	(pg. 127)	R1200
RD-100-A	(pg. 130)	R1200-F
RD-100-A1	(pg. 130)	R1200-F1
RD-100-A2	(pg. 130)	R1200-F2
RD-100-B	(pg. 127)	R1200-B
RD-100-BE	(pg. 128)	R1200-E
RD-100-BED	(pg. 128)	R1200-EU
RD-100-BVD	(pg. 128)	R1200-BUV
RD-100-C	(pg. 127)	R1200-C
RD-100-CH	(pg. 131)	R1200-HC
RD-100-CJ	(pg. 131)	R1200-JC
RD-100-CP	(pg. 133)	R1200-PR
RD-100-CP-1	(pg. 133)	R1200-PR-1
RD-100-CP-3	(pg. 133)	R1200-PR-3
RD-100-CP-4	(pg. 133)	R1200-PR-4
RD-100-CP-15"	(pg. 133)	R1200-C-PR15
RD-100-CP-15"-1	(pg. 133)	R1200-PR15-1
RD-100-CP-15"-3	(pg. 133)	R1200-PR15-3
RD-100-CP-15"-4	(pg. 133)	R1200-PR15-4
RD-100-D	(pg. 127)	R1200-U
RD-100-EL	(pg. 128)	R1200-BUV-B
RD-100-F	(pg. 132)	R1200-JD-STR
RD-100-GSS	(pg. 130)	R1200-G
RD-100-K	(pg. 127)	R1200-M
RD-100-O	(pg. 143)	R1270
RD-100-R	(pg. 135)	R1200-R
RD-100-SO	(pg. 138)	R1200-90
RD-100-W	(pg. 137)	R1200-W
RD-100-Z	(pg. 137)	R1200-Z
RD-200	(pg. 122)	R1100
RD-200-A1	(pg. 123)	R1100-F1
RD-200-A2	(pg. 123)	R1100-F2
RD-200-B	(pg. 122)	R1100-B
RD-200-BE	(pg. 122)	R1100-E
RD-200-BED	(pg. 122)	R1100-EU
RD-200-C	(pg. 122)	R1100-C
RD-200-CJ	(pg. 124)	R1100-JC
RD-200-CP	(pg. 125)	R1100-PR
RD-200-CP-1	(pg. 125)	R1100-PR-1
RD-200-CP-3	(pg. 125)	R1100-PR-3
RD-200-CP-4	(pg. 125)	R1100-PR-4
RD-200-D	(pg. 122)	R1100-U
RD-200-GSS	(pg. 123)	R1100-G
RD-200-K	(pg. 122)	R1100-M
RD-200-R	(pg. 122)	R1100-R
RD-200-SO	(pg. 126)	R1100-90
RD-200-W	(pg. 122)	R1100-W
RD-220	(pg. 140)	R1220
RD-220-A	(pg. 140)	R1220-F1
RD-220-A1	(pg. 140)	R1220-F2
RD-220-A2	(pg. 140)	R1220-F2
RD-220-B	(pg. 140)	R1220-B
RD-220-BE	(pg. 140)	R1220-E
RD-220-BED	(pg. 140)	R1220-EU
RD-220-BVD	(pg. 140)	R1220-BUV
RD-220-C	(pg. 140)	R1220-C
RD-220-CH	(pg. 140)	R1220-HC
RD-220-CJ	(pg. 141)	R1220-JC
RD-220-CP-1	(pg. 141)	R1220-PR-1
RD-220-CP-3	(pg. 141)	R1220-PR-3
RD-220-CP-4	(pg. 141)	R1220-PR-4
RD-220-CP-15"-1	(pg. 133)	R1200-PR15-1
RD-220-CP-15"-3	(pg. 133)	R1200-PR15-3
RD-220-CP-15"-4	(pg. 133)	R1200-PR15-4
RD-220-D	(pg. 140)	R1220-U
RD-220-GSS	(pg. 140)	R1220-G
RD-220-K	(pg. 140)	R1220-M
RD-220-R	(pg. 141)	R1220-R
RD-220-S	(pg. 140)	R1220-90
RD-220-V	(pg. 140)	R1220-V
RD-220-W	(pg. 140)	R1220-W
RD-220-Z	(pg. 140)	R1220-Z
RD-230	(pg. 151)	R1420
RD-230-81	(pg. 151)	R1420-2RB
RD-230-A	(pg. 151)	R1420-2RB
RD-230-14	(pg. 151)	R1420-14-1
RD-230-H-81	(pg. 151)	R1420-HM-2RB
RD-240	(pg. 150)	R1400
RD-240-81	(pg. 150)	R1400-2RB
RD-240-1	(pg. 150)	R1400-1
RD-240-14	(pg. 150)	R1400-14-1
RD-250	(pg. 126)	R1150
RD-260	(pg. 126)	R1150-SPEC
RD-260-B	(pg. 126)	R1150-SPEC
RD-270	(pg. 148)	R1300T
RD-270-1	(pg. 148)	R1300T-1
RD-270-50	(pg. 148)	R1300T-50
RD-270-A	(pg. 148)	R1310T-50
RD-270-A-1	(pg. 148)	R1310T-1
RD-270-A-50	(pg. 148)	R1310T-50
RD-270-T	(pg. 148)	R1300T
RD-280	(pg. 122)	R1100
RD-280-SO	(pg. 126)	R1100-90
RD-290	(pg. 149)	R1320T
RD-290-1	(pg. 149)	R1320T-1
RD-290-50	(pg. 149)	R1320T-50
RD-290-A	(pg. 149)	R1330T-50
RD-290-A-1	(pg. 149)	R1330T-1
RD-290-A-50	(pg. 149)	R1330T-50
RD-300	(pg. 142)	R1260
RD-300-CH	(pg. 131)	R1200-HC
RD-300-CH-K	(pg. 131)	R1200-M-HC
RD-300-CP15	(pg. 133)	R1200-PR15
RD-300-F	(pg. 132)	R1200-JD-STR
RD-300-GSS	(pg. 130)	R1200-G
RD-300-GSS-K	(pg. 130)	R1200-M-G
RD-300-K	(pg. 122)	R1200-M
RD-300-R	(pg. 142)	R1260-R
RD-300-W	(pg. 142)	R1260-W
RD-400	(pg. 135)	R1200-RS
RD-410	(pg. 125)	R1100-RS
RD-500	(pg. 142)	R1260
RD-640	(pg. 153)	R1640
RD-641	(pg. 153)	R1640-8
RD-642	(pg. 153)	R1640-13
RD-643	(pg. 153)	R1640-17
RD-644	(pg. 153)	R1640-22
RD-680-VC	(pg. 155)	R1930
RD-700	(pg. 143)	R1270
RD-900	(pg. 155)	R1900
RD-940	(pg. 156)	R1940
RD-940-1	(pg. 156)	R1940-NH-1
RD-940-T-1	(pg. 156)	R1940-1
RD-950	(pg. 158)	R1960
RD-970	(pg. 152)	R1510
RD-980	(pg. 152)	R1520

"X" Contact MIFAB

ROOF DRAIN OPTIONAL VARIATIONS

WATTS			MIFAB
-1	Nickel Bronze	(pg. 365, 366)	-1
-2	Polished Bronze	(pg. 365, 366)	-2
-3	Stainless Steel	(pg. 365, 366)	-3
-4	Ductile Iron	(pg. 365, 366)	-4
-5	Sediment Bucket	(pg. 365, 366)	-5
-6	Vandal Proof	(pg. 365, 366)	-6
-8	Backwater valve	(pg. 365, 366)	-8
-9	Hinged Grate	(pg. 365, 366)	-9
-11	Acid Resistant Epoxy	(pg. 365, 366)	-11
-12	Galvanized Top	(pg. 365, 366)	-12
-13	All Galvanized	(pg. 365, 366)	-13
-14	Flat Grate	(pg. 365, 366)	-14
-15	Extension	(pg. 365, 366)	-E
-60	PVC Body	(pg. 365, 366)	-30
-61	ABS Body	(pg. 365, 366)	-31
-80	Aluminum Dome	(pg. 365, 366)	-80
-81	Bronze Dome	(pg. 365, 366)	-81
-82	SS Mesh Screen over cast dome	(pg. 365, 366)	-83
-83	SS Mesh Screen over cast dome	(pg. 365, 366)	-83
-113M	3M Epoxy	(pg. 365, 366)	-3M
-A	Weir	(pg. 365, 366)	-F
-A1	Single Slot Weir	(pg. 365, 366)	-F1
-A2	Two Slot Weir	(pg. 365, 366)	-F2
-B	Sump Receiver	(pg. 365, 366)	-B
-C	Secondary Clamp	(pg. 365, 366)	-C
-D	Underdeck Clamp	(pg. 365, 366)	-U
-E	Adjustable Extension	(pg. 365, 366)	-E

-GSS	SS Ballast Guard	(pg. 365, 366)	-G
-K	Ductile Iron Dome	(pg. 365, 366)	-M
-K-13	Galvanized dome	(pg. 365, 366)	-M-13
-K-80	Aluminum dome	(pg. 365, 366)	-M-80
-L	Vandal Proof Dome	(pg. 365, 366)	-6
P	Push On Outlet	(pg. 365, 366)	P
-R	2" High Water Dam	(pg. 365, 366)	-R
STD	No Hub outlet	(pg. 365, 366)	Std.
T	Threaded Outlet	(pg. 365, 366)	T
-V	Fixed Gasketed Ext.	(pg. 365, 366)	-V
-W	Adj. Internal Water Dam	(pg. 365, 366)	-W
-W-1	Water Proofing Flange	(pg. 365, 366)	-W-1
X	Inside Caulk Outlet	(pg. 365, 366)	X
-Z	Elastomeric flange	(pg. 365, 366)	-Z

TRAP SEAL PRIMERS AND MISC SPECIALTIES

WATTS		MIFAB
A-200	(pg. 296)	MI-TSP-2
A200S	(pg. 296)	MI-TSP-1
A200T	(pg. 296)	MI-TSP-2
MS-810	(pg. 296)	MI-TSP-1
MS-930	(pg. 307)	MI-600-50
MS-8000	(pg. 290)	MI-GRILL
SD-3000	(see CLPB)	SD-7000
TP300T-DR	(pg. 295)	MR-500-NPB
TP300S-DR	(pg. 295)	MR-500-NPB
TP300-DU-DR	(pg. 296)	MI-DU-625

TRENCH DRAINS

WATTS		MIFAB
TD-900	(pg. 90)	T1150-4
TD-900-4	(pg. 90)	T1150-4
TD-900-4-1	(pg. 90)	T1150-4-3
TD-900-4-3	(pg. 90)	T1150-4-3
TD-900-28	(pg. 90)	T1150-28
TD-900-B	(pg. 90)	T1150-F-4
TD-900-B-4	(pg. 90)	T1150-F-4
TD-900-B-4-1	(pg. 90)	T1150-F-4-3
TD-900-B-4-3	(pg. 90)	T1150-F-4-3
TD-900-B-28	(pg. 90)	T1150-F-28
TD-900-C	(pg. 90)	T1200-F2-4
TD-900-C2-4	(pg. 90)	T1200-F2-4
TD-900-C2-4-1	(pg. 90)	T1200-F2-4-3
TD-900-C2-4-3	(pg. 90)	T1200-F2-4-3
TD-900-C2-28	(pg. 90)	T1200-F2-28
TD-910	(pg. 90)	T1200-4
TD-910-B	(pg. 90)	T1200-F-4
TD-920	(see TD Book)	T1360-FL-FAB
TD-940	(see TD Book)	T1330-FL-FAB
800	(pg. 91)	T1350-FL

TRENCH DRAIN OPTIONAL VARIATIONS

WATTS			MIFAB
-1	Nickel bronze	(pg. 365, 366)	-1
-3	Stainless steel	(pg. 365, 366)	-3
-4	Ductile iron	(pg. 365, 366)	-4
-5	Sediment bucket	(pg. 365, 366)	-5
-6	Vandal proof	(pg. 365, 366)	-6
-8	Backwater valve per outlet	(pg. 365, 366)	-8
-12	Galvanized grate only	(pg. 365, 366)	-12
-13	All galvanized	(pg. 365, 366)	-13
-20	Secondary dome strainer	(pg. 365, 366)	-20
-21	Secondary flat strainer	(pg. 365, 366)	-21
-28	All 304 S.S. Body	(pg. 365, 366)	-28
-32	Anchor fl. & mem clamp	(pg. 365, 366)	-38
-11	3M epoxy finish	(pg. 365, 366)	-3M
-F	Anchor flange	(pg. 365, 366)	-FL
P	Push on outlet	(pg. 365, 366)	P
S	No hub side outlet	(pg. 365, 366)	-90
T	Threaded outlet	(pg. 365, 366)	T
X	Inside caulk outlet	(pg. 365, 366)	X

WATER HAMMER ARRESTORS

WATTS		MIFAB
LF15M2-A-DR	(pg. 313)	MWH-A
LF15M2-B-DR	(pg. 313)	MWH-B
LF15M2-C-DR	(pg. 313)	MWH-C
LF15M2-D-DR	(pg. 313)	MWH-D
LF15M2-E-DR	(pg. 313)	MWH-E
LF15M2-F-DR	(pg. 313)	MWH-F
SG-050	(pg. 313)	MWH-A
SG-075	(pg. 313)	MWH-B
SG-100	(pg. 313)	MWH-C
SG-125	(pg. 313)	MWH-D
SG-150	(pg. 313)	MWH-E
SG-200	(pg. 313)	MWH-F
SG-A	(pg. 314)	WHB-A
SG-B	(pg. 314)	WHB-B
SG-C	(pg. 314)	WHB-C
SG-D	(pg. 314)	WHB-D
SG-E	(pg. 314)	WHB-E
SG-F	(pg. 314)	WHB-F
SS-A	(pg. 314)	WHB-A
SS-B	(pg. 314)	WHB-B
SS-C	(pg. 314)	WHB-C
SS-D	(pg. 314)	WHB-D
SS-E	(pg. 314)	WHB-E
SS-F	(pg. 314)	WHB-F

MODULAR PARTS COMPARISON GUIDE B2 CAST IRON BODIES

WATTS			MIFAB
B2-2	2" No hub CI	(pg. 315)	A2-2NH-7
B2-3	3" No hub CI	(pg. 315)	A2-3NH-7
B2-4	4" No hub CI	(pg. 315)	A2-4NH-7
B2-6	6" No hub CI	(pg. 315)	A2-6NH-7
B2-8	8" No hub CI	(pg. 315)	A2-8NH-7
B2-2P	2" Push on CI	(pg. 315)	A2-2P-7
B2-3P	3" Push on CI	(pg. 315)	A2-3P-7
B2-4P	4" Push on CI	(pg. 315)	A2-4P-7
B2-2X	2" Inside caulk	(pg. 315)	A2-2X-7
B2-3X	3" Inside caulk	(pg. 315)	A2-3X-7
B2-4X	4" Inside caulk	(pg. 315)	A2-4X-7

B2 PVC AND ABS BODIES

WATTS			MIFAB
B2-2-60	2" PVC socket	(pg. 315)	A2-2-30-7
B2-3-60	3" PVC socket	(pg. 315)	A2-3-30-7
B2-4-60	4" PVC socket	(pg. 315)	A2-4-30-7
B2-2-61	2" ABS socket	(pg. 315)	A2-2-31-7
B2-3-61	3" ABS socket	(pg. 315)	A2-3-31-7
B2-4-61	4" ABS socket	(pg. 315)	A2-4-31-7

B3 CAST IRON BODIES

WATTS			MIFAB
B3-2	2" No hub CI	(pg. 315)	A1-2NH-7
B3-3	3" No hub CI	(pg. 315)	A1-3NH-7
B3-4	4" No hub CI	(pg. 315)	A1-4NH-7
B3-6	6" No hub CI	(pg. 315)	A1-6NH-7
B3T-2NH	2" No hub CI	(pg. 315)	A1-2NH-7
B3T-3NH	3" No hub CI	(pg. 315)	A1-3NH-7
B3T-4NH	4" No hub CI	(pg. 315)	A1-4NH-7
B3T-2P	2" Push on CI	(pg. 315)	A1-2P-7
B3T-3P	3" Push on CI	(pg. 315)	A1-3P-7
B3T-4P	4" Push on CI	(pg. 315)	A1-4P-7
B3-2P	2" Push on CI	(pg. 315)	A1-2P-7
B3-3P	3" Push on CI	(pg. 315)	A1-3P-7
B3-4P	4" Push on CI	(pg. 315)	A1-4P-7
B3-2X	2" Inside caulk	(pg. 315)	A1-2X-7
B3-3X	3" Inside caulk	(pg. 315)	A1-3X-7
B3-4X	4" Inside caulk	(pg. 315)	A1-4X-7
B3-2T	2" Threaded	(pg. 315)	A1-2T-7
B3-3T	3" Threaded	(pg. 315)	A1-3T-7
B3-4T	4" Threaded	(pg. 315)	A1-4T-7

B3 PVC AND ABS BODIES

WATTS			MIFAB
B3-2-60	2" PVC socket	(pg. 315)	A1-2-30-7
B3-3-60	3" PVC socket	(pg. 315)	A1-3-30-7
B3-4-60	4" PVC socket	(pg. 315)	A1-4-30-7
B3-2-61	2" ABS socket	(pg. 315)	A1-2-31-7
B3-3-61	3" ABS socket	(pg. 315)	A1-3-31-7
B3-4-61	4" ABS socket	(pg. 315)	A1-4-31-7

B4 CAST IRON BODIES

WATTS			MIFAB
B4-2	2" No hub CI	(pg. 315)	A1-2NH-7
B4-34-2	2" No hub CI	(pg. 315)	A1-2NH-7
B4-3	3" No hub CI	(pg. 315)	A1-3NH-7
B4-34-3	3" No hub CI	(pg. 315)	A1-3NH-7
B4-4	4" No hub CI	(pg. 315)	A1-4NH-7
B4-34-4	4" No hub CI	(pg. 315)	A1-4NH-7
B4-2P	2" Push on CI	(pg. 315)	A1-2P-7
B4-34-2P	2" Push on CI	(pg. 315)	A1-2P-7
B4-3P	3" Push on CI	(pg. 315)	A1-3P-7
B4-34-3P	3" Push on CI	(pg. 315)	A1-3P-7
B4-4P	4" Push on CI	(pg. 315)	A1-4P-7
B4-34-4P	4" Push on CI	(pg. 315)	A1-4P-7

B4 PVC AND ABS BODIES

WATTS			MIFAB
B4-3-60	3" PVC socket	(pg. 315)	A1-3-30-7
B4-4-60	4"' PVC socket	(pg. 315)	A1-4-30-7
B4-3-61	3" PVC socket	(pg. 315)	A1-3-31-7
B4-4-61	4"' PVC socket	(pg. 315)	A1-4-31-7

MEMBRANE CLAMP FOR FLOOR DRAINS

WATTS			MIFAB
B3-C1	Low rough-in membrane clamp	(pg. 316)	A1-C1

ROUND STRAINERS FOR FLOOR DRAINS

WATTS			MIFAB
A5-1	5" Dia. NB	(pg. 50)	5-1
A6-1	6" Dia. NB	(pg. 50)	6-1
A7-1	7" Dia. NB	(pg. 50)	7-1
A8-1	8" Dia. NB	(pg. 50)	8-1
5-1	5" Dia. HD NB	(pg. 51)	X5-1
6-1	6" Dia. HD NB	(pg. 51)	X6-1
8-1	8" Dia. HD NB	(pg. 51)	X8-1
5-4	5" Dia. DI	(pg. 50)	5-4
5-3	5" Dia. HD SS	(pg. 50)	5-3
6-3	6" Dia. HD SS	(pg. 50)	6-3

SQUARE STRAINERS FOR FLOOR DRAINS

WATTS			MIFAB
L5-1	5" x 5" HD NB	(pg. 51)	XS5-1
L6-1	6" x 6" HD NB	(pg. 51)	XS6-1
L8-1	8" x 8" HD NB	(pg. 51)	XS8-1
L5-3	5" x 5" HD SS	(pg. 51)	S5-3
L6-3	6" x 6" HD SS	(pg. 51)	S6-3
M5-1	5" x 5" NB	(pg. 51)	S5-1
M6-1	6" x 6" NB	(pg. 51)	S6-1
M8-1	8" x 8" NB	(pg. 51)	S8-1

Design and dimensions are subject to modification. Prices do not include applicable taxes. Visit **www.mifab.com** for the most recent product information.
MIFAB®, Inc., 1321 West 119th Street, Chicago, Illinois 60643-5109, USA Toll Free: 1-800-465-2736 • Fax: 1-773-341-3049
sales@mifab.com • Canada Toll Free: 1-800-387-3880
All sales subject to MIFAB's® Terms & Warranties. Please refer to inside front cover.

AREA DRAIN TOP ASSEMBLIES

WATTS			MIFAB
FD-300-1	7” Dia. NB	(pg. 50)	N7-1
FD-300-4	7”Dia. DI	(pg. 320)	F1300-TA-4
FD-320-1	9” Dia. NB	(pg. 50)	N9-1
FD-320-50	8” Sq. DI	(pg. 320)	F1320-TA-4
FD-320-Y	8” Sq. DI	(pg. 320)	F1320-TA-4
FD-330-1	8” Sq. NB	(pg. 320)	F1420-TA-1
FD-330-50	8” Sq. DI	(pg. 320)	F1420-TA-4
FD-340-1	12” Dia. NB	(pg. 320)	F1340-TA-1
FD-340-50	12”Dia. DI	(pg. 320)	F1340-TA-4
FD-340-Y-1	12” Dia. NB	(pg. 320)	F1340-TA-1
FD-340-Y-50	12” Dia. DI	(pg. 320)	F1340-TA-4
FD-360-4	16” Dia. DI	(pg. 320)	F1360-TA-4
FD-450-AF-1	16” Sq. NB	(pg. 320)	F1460-TA-1
FD-450-AF-4	16” Sq. DI	(pg. 320)	F1460-TA-4
FD-460-AF-1	12” Sq. NB	(pg. 320)	F1440-TA-1
FD-460-AF-4	12” Sq. DI	(pg. 320)	F1440-TA-4
FD-460-F-1	12” Sq. NB	(pg. 320)	F1440-TA-1
FD-460-F-4	12” Sq. DI	(pg. 320)	F1440-TA-4

REPLACEMENT FLOOR AND AREA DRAIN GRATES & CLEANOUT COVERS

WATTS		MIFAB
A5PG-1	(pg. 319)	5PG-1
A6PG-1	(pg. 319)	6PG-1
5PG-1	(pg. 319)	5PG-3
FD-300-PG-1	(pg. 319)	N7-PG-1
FD-300-PG-4	(pg. 320)	F1300-PG-4
FD-320-PG-1	(pg. 319)	N9-PG-1
FD-320-PG-4	(pg. 320)	F1320-PG-4
FD-340-PG-1	(pg. 320)	F1340-PG-1
FD-340-PG-4	(pg. 320)	F1340-PG-4
FD-450-AF-PG-4	(pg. 320)	F1460-PG-4
FD-450-AF-PG50-1	(pg. 320)	F1460-PG-1
FD-460-AF-PG-4	(pg. 320)	F1440-PG-4
FD-460-AF-PG-1	(pg. 320)	F1440-PG-1
R5G-1	(pg. 324)	5PC-1
RXPG-1	(pg. 324)	X5PC-1
RXPG-4	(pg. 324)	5PC-4

ADJUSTABLE EXTENSION FOR FLOOR DRAINS

WATTS			MIFAB
B3-XY	small CI extension	(pg. 50)	DD-50
DD-1	small NB extension	(pg. 50)	DD-1
DD-XY-50	small CI extension	(pg. 50)	DD-50

SEDIMENT BUCKET FOR FLOOR DRAINS

WATTS			MIFAB
B1B	Plastic sed bucket	(pg. 320)	A1-PB
B2B	Large CI sed. Buck	(pg. 320)	A2-MB
B3B	Small CI sed. Buck.	(pg. 320)	A1-MB

FUNNELS FOR FLOOR DRAINS

WATTS			MIFAB
EF-1		(pg. 50)	EF4-1
EF-50	4” round CI funnel	(pg. 50)	EF4-50
EF6-1	6” round NB funnel	(pg. 50)	EF6-1
EF6-50	6” round CI funnel	(pg. 50)	EF6-50
EG-1	4” x 9” NB funnel	(pg. 50)	EG-1
EG-50	4” x 9” CI funnel	(pg. 50)	EG-50
F4-1	4” round NB funnel only	(pg. 50)	F4-1
F4-50	4” round CI funnel only	(pg. 50)	F4-50
G-1	4” x 9” oval NB funnel only	(pg. 50)	G-1
G-50	4” x 9” oval CI funnel only	(pg. 50)	G-50

HARDWARE PACKS

WATTS			MIFAB
FC-1	3 cap screws with integral washers	(pg. 317)	HS-1
FC-2	3 bolts, washers and nuts for roof drains	(pg. 317)	HS-2
FC-3	3 bolts, washers and nuts for deck clamp	(pg. 317)	HS-3
FC-4	3 bolts, washers and nuts for extensions	(pg. 317)	HS-3

PRE-ASSEMBLED ECONOMY FLOOR DRAINS

WATTS		MIFAB
FD-390-E-1	(pg. 55)	F1230-1
FD-390-E-4	(pg. 55)	F1230-4
FD-390-E-63-1	(pg. 55)	F1230-WF-1
FD-390-E-63-4	(pg. 55)	F1230-WF-4

CLEANOUT TOP ASSEMBLIES

WATTS			MIFAB
R-1	5” Dia. NB CO top	(pg. 324)	R-1
R-3	5” Dia. SS CO top	(pg. 324)	R-3
RX-3	5” Dia. SS CO top	(pg. 324)	R-3
RC-1	5” Dia. NB CO top car/mar	(pg. 324)	RC-1
RX-1	5” Dia. NB Co top	(pg. 324)	R-3
RX-4	5” Dia. D.I. CO top	(pg. 324)	R-4
S-1	5” x 5” NB CO top	(pg. 324)	S-1
S-3	5” x 5” SS CO top	(pg. 324)	S-3
T-1	5” Dia. NB CO top for tile	(pg. 324)	T-1
TS-1	5” x 5” NB CO top for tile	(pg. 324)	TS-1
U-1	5” Dia. NB CO top for terr.	(pg. 324)	U-1
US-1	5” x 5” NB CO top for terr	(pg. 324)	US-1

ROOF DRAIN DOMES

WATTS			MIFAB
B2 DM	R1200 poly	(pg. 323)	A2-PD
B2 KDM-L-4	R1200 low DI	(pg. 323)	A2-MDL-80
B2 KDM-4	R1200 DI dome	(pg. 323)	A2-MD
B2 KDM-80	R1200 alum	(pg. 323)	A2-MDL-80
B3 DM	R1100 poly	(pg. 323)	A1-PD
B3 KDM-80	R1100 alum	(pg. 323)	A1-MD

ROOF DRAIN CLAMP RINGS FOR RD-100

WATTS			MIFAB
B2-FLG	R1200 membrane clamp and underdeck clamp	(pg. 316)	A2-C3
B2-FLG-W-80	R1200 AL Dome w/ABS standpipe	(pg. 316) (pg. 323)	A2-C3-W w/A2-MDL-80
B2-FLG-D	2” high water dam.	(pg. 316)	A2-WD
B2-S	R1200 sump receiver	(pg. 323)	A2-BP

ROOF DRAIN FIXED EXTENSIONS

WATTS			MIFAB
B2-V2	2” fixed extension - R1200	(pg. 318)	A2-V2
B2-V3	3” fixed extension - R1200	(pg. 318)	A2-V3
B2-V4	4” fixed extension - R1200	(pg. 318)	A2-V4

ROOF DRAIN CLAMP RINGS FOR RD-200

WATTS			MIFAB
B3-FLG	R1100 membrane clamp and underdeck clamp	(pg. 316)	A1-C3
B3-FLG-W-80	R1100 al. Dome w/ A1-MD w/ABS standpipe and A1-W	(pg. 316)	A1-C3
B3-S	R1100 sump receiver	(pg. 323)	A1-BP

ROOF DRAIN ACCUTROL WEIRS

WATTS			MIFAB
B2-A1	R1200 1 weir Accutrol	(pg. 323)	A2-F1
B2-A2	R1200 2 weir Accutrol	(pg. 323)	A2-F2
B3-A1	R1100 1 weir Accutrol	(pg. 323)	A1-F1
B3-A2	R1100 2 weir Accutrol	(pg. 323)	A1-F2
B3-A3	R1100 3 weir Accutrol	(pg. 323)	A1-F3

ROOF DRAIN BALLAST GUARDS

WATTS		MIFAB
B2-GSS	R1200 SS ballast guard (pg. 323)	A2-BG
B2-H	R1200 SS ballast guard (pg. 323)	A2-BG
B3-GSS	R1100 SS ballast guard (pg. 323)	A1-BG

ZURN - MIFAB CROSS REFERENCE

ROOF DRAINS

ZURN		MIFAB
Z100	(pg. 127)	R1200
Z100-AC	(pg. 127)	R1200-U
Z100-AR	(pg. 127)	R1200-11
Z100-AW	(pg. 137)	R1200-W
Z100-BS	(pg. 127)	R1200-M-83
Z100-C	(pg. 127)	R1200-U
Z100-DE	(pg. 128)	R1200-B-EU
Z100-DP	(pg. 127)	R1200-B
Z100-DR	(pg. 128)	R1200-EU
Z100-DX	(pg. 137)	R1200-Z
Z100-E	(pg. 127)	R1200-V
Z100-EA	(pg. 128)	R1200-E
Z100-EA-C	(pg. 128)	R1200-EU
Z100-EB	(pg. 128)	R1200-E
Z100-EC	(pg. 127)	R1200-UV
Z100-FG	(pg. 133)	R1200-PR
Z100-G	(pg. 127)	R1200-M-13
Z100-GD	(pg. 127)	R1200-M-12
Z100-HD	(pg. 127)	R1200-M-80
Z100-R	(pg. 127)	R1200-B
Z100-SC	(pg. 127)	R1200-C
Z100-SE	(pg. 131)	R1200-HC
Z100-SS	(pg. 127)	R1200-M-83
Z100-SSM	(pg. 127)	R1200-M-83
Z100-ST	(pg. 127)	R1200-M-SP
Z100-TC	(pg. 127)	R1200-TC
Z100-VP	(pg. 127)	R1200-6
Z100-W	(pg. 137)	R1200-W
Z100-W2	(pg. 137)	R1200-W2
Z100-W3	(pg. 137)	R1200-W3
Z100-W4	(pg. 137)	R1200-W4
Z100-XJ	(pg. 127)	R1200 w/R1900
Z100-84	(pg. 130)	R1200-G
Z100-85	(pg. 131)	R1200-JC
Z100-89	(pg. 135)	R1200-R

Z100-90	(pg. 138)	R1200-90
ZA100	(pg. 127)	R1200-M-80
ZC100	(pg. 127)	R1200-M
ZRB100	(pg. 127)	R1200-81
Z101	(pg. 142)	R1260
Z101-AR	(pg. 142)	R1260-11
Z101-DP	(pg. 142)	R1260-B
Z101-E	(pg. 142)	R1260-E
Z101-G	(pg. 142)	R1260-M-13
Z101-R	(pg. 142)	R1260-B
Z101-W2	(pg. 142)	R1260-W2
Z101-W3	(pg. 142)	R1260-W3
Z101-W4	(pg. 142)	R1260-W4
Z101-89	(pg. 142)	R1260-R
Z103	(pg. 136)	R1200-SO
Z103-45	(pg. 136)	R1200-SO-45
Z104	(pg. 142)	R1250
Z104-AC	(pg. 142)	R1250-U
Z104-AR	(pg. 142)	R1250-11
Z104-AW	(pg. 142)	R1250-W
Z104-BS	(pg. 142)	R1250-M-83
Z104-C	(pg. 142)	R1250-U
Z104-DX	(pg. 142)	R1250-Z
Z104-E	(pg. 142)	R1250-V
Z104-EA	(pg. 142)	R1250-E
Z104-EA-C	(pg. 142)	R1250-EU
Z104-EB	(pg. 142)	R1250-E
Z104-ES	(pg. 142)	R1250-C-V
Z104-FG	(pg. 142)	R1250-PR
Z104-G	(pg. 142)	R1250-M-13
Z104-GD	(pg. 142)	R1250-M-12
Z104-HD	(pg. 142)	R1250-M-80
Z104-R	(pg. 142)	R1250-B
Z104-SC	(pg. 142)	R1250-C
Z104-SS	(pg. 142)	R1250-M-83
Z104-VP	(pg. 142)	R1250-6
Z104-W2	(pg. 142)	R1250-W2
Z104-W3	(pg. 142)	R1250-W3
Z104-W4	(pg. 142)	R1250-W4
Z104-XJ	(pg. 142)	R1250 w/R1900
Z104-84	(pg. 142)	R1250-G
Z104-85	(pg. 142)	R1250-JC
Z104-89	(pg. 142)	R1250-R
ZA104	(pg. 142)	R1250-M-80
ZC104	(pg. 142)	R1250-M
ZRB104	(pg. 142)	R1250-81
Z105	(pg. 130)	R1200-F
Z105-C	(pg. 130)	R1200-F-U
Z105-DE	(pg. 130)	R1200-F-B-EU
Z105-DP	(pg. 130)	R1200-F-B
Z105-DR	(pg. 130)	R1200-F-EU
Z105-DX	(pg. 130)	R1200-F-Z
Z105-E	(pg. 130)	R1200-F-V
Z105-EA	(pg. 130)	R1200-F-E
Z105-EA-C	(pg. 130)	R1200-F-EU
Z105-EA-R-C	(pg. 130)	R1200-F-EU
Z105-EC	(pg. 130)	R1200-F-UV
Z105-ERC	(pg. 130)	R1200-BUV-F
Z105-G	(pg. 130)	R1200-F-M-13
Z105-R	(pg. 130)	R1200-F-B
Z105-SC	(pg. 130)	R1200-F-C
Z105-TC	(pg. 130)	R1200-F-TC
Z105-VP	(pg. 130)	R1200-F-6
Z105-XJ	(pg. 130)	R1200-F w/R1900
Z105-1	(pg. 130)	R1200-F
Z105-90	(pg. 130)	R1200-F-90
ZA105	(pg. 130)	R1200-F-M-80
ZC105	(pg. 130)	R1200-F-M
ZRB105	(pg. 130)	R1200-F-81
Z107	(pg. 137)	R1200-Z
Z107-AC	(pg. 137)	R1200-Z-U
Z107-AR	(pg. 137)	R1200-Z-11
Z107-AW	(pg. 137)	R1200-Z-W
Z107-BS	(pg. 137)	R1200-Z-M-83
Z107-C	(pg. 137)	R1200-Z-U
Z107-E	(pg. 137)	R1200-Z-V
Z107-EA	(pg. 137)	R1200-Z-E
Z107-FG	(pg. 137)	R1200-Z-P
Z107-G	(pg. 137)	R1200-Z-M-13
Z107-GD	(pg. 137)	R1200-Z-M-12

Z107-HD	(pg. 137)	R1200-Z-M-80
Z107-SS	(pg. 137)	R1200-Z-M-83
Z107-VP	(pg. 137)	R1200-Z-6
Z107-W2	(pg. 137)	R1200-Z-W2
Z107-W3	(pg. 137)	R1200-Z-W3
Z107-W4	(pg. 137)	R1200-Z-W4
Z107-XJ	(pg. 137)	R1200-Z w/R1900
Z107-84	(pg. 137)	R1200-Z-G
Z107-85	(pg. 137)	R1200-Z-JC
Z107-89	(pg. 137)	R1200-Z-R
ZA107	(pg. 137)	R1200-Z-M-80
ZC107	(pg. 137)	R1200-Z-M
ZRB107	(pg. 137)	R1200-Z-81
Z108	(pg. 135)	R1200-RS
Z108-AR	(pg. 135)	R1200-RS-11
Z108-C	(pg. 135)	R1200-RS-U
Z108-DE	(pg. 135)	R1250-RS-B-EU
Z108-DP	(pg. 135)	R1200-RS-B
Z108-DR	(pg. 135)	R1200-RS-EU
Z108-E	(pg. 135)	R1200-RS-V
Z108-EA	(pg. 135)	R1200-RS-E
Z108-EB	(pg. 135)	R1200-RS-E
Z108-DX	(pg. 135)	R1200-RS-Z
Z108-E	(pg. 135)	R1200-RS-V
Z108-EA	(pg. 135)	R1200-RS-E
Z108-FG	(pg. 135)	R1200-RS-P
Z108-G	(pg. 135)	R1200-RS-M-13
Z108-HD	(pg. 135)	R1200-RS
Z108-R	(pg. 135)	R1200-RS-B
Z108-TC	(pg. 135)	R1200-RS-TC
Z108-90	(pg. 135)	R1200-RS-90
Z110	(pg. 160)	R1200-JD-M-G5H
Z110-AI	(pg. 160)	R1200-JD-G8H-AI
Z111	(pg. 154)	R1820
Z121	(pg. 140)	R1220
Z121-A	(pg. 140)	R1220-W-1
Z121-AR	(pg. 140)	R1220-11
Z121-BS	(pg. 140)	R1220-M-83
Z121-C	(pg. 140)	R1220-U
Z121-DP	(pg. 140)	R1220-B
Z121-DR	(pg. 140)	R1220-EU
Z121-E	(pg. 140)	R1220-V
Z121-EA	(pg. 140)	R1220-E
Z121-EA-C	(pg. 140)	R1220-EU
Z121-EB	(pg. 140)	R1220-E
Z121-EC	(pg. 140)	R1220-UV
Z121-ERC	(pg. 140)	R1220-BUV
Z121-ES	(pg. 140)	R1220-C-V
Z121-FG	(pg. 141)	R1220-PR
Z121-G	(pg. 140)	R1220-M-13
Z121-R	(pg. 140)	R1220-B
Z121-SC	(pg. 140)	R1220-C
Z121-SE	(pg. 140)	R1220-HC
Z121-SS	(pg. 140)	R1220-M-83
Z121-SSM	(pg. 140)	R1220-M-83
Z121-TC	(pg. 140)	R1220-TC
Z121-VP	(pg. 140)	R1220-6
Z121-XJ	(pg. 140)	R1220 w/R1900
Z121-84	(pg. 140)	R1220-G
Z121-85	(pg. 141)	R1220-JC
Z121-89	(pg. 141)	R1220-R
Z121-90	(pg. 140)	R1220-90
ZA121	(pg. 140)	R1220-M-80
ZCF121	(pg. 140)	R1220-F
ZCF121-A	(pg. 140)	R1220-F-W-1
ZCF121-AR	(pg. 140)	R1220-F-11
ZCF121-C	(pg. 140)	R1220-F-U
ZCF121-E	(pg. 140)	R1220-F-V
ZCF121-EA	(pg. 140)	R1220-F-E
ZCF121-EA-C	(pg. 140)	R1220-F-EU
ZCF121-EB	(pg. 140)	R1220-F-E
ZCF121-G	(pg. 140)	R1220-F-M-13
ZCF121-R	(pg. 140)	R1220-F-B
ZCF121-SSM	(pg. 140)	R1220-F-83
ZCF121-VP	(pg. 140)	R1220-F-6
ZCF121-84	(pg. 140)	R1220-F-G
ZCF121-90	(pg. 140)	R1220-F-90
ZACF121	(pg. 140)	R1220-F-M-80
ZRB121	(pg. 140)	R1220-81
Z122	(pg. 141)	R1220-RS

Z122-AR	(pg. 141)	R1220-RS-11
Z122-C	(pg. 141)	R1220-RS-U
Z122-DP	(pg. 141)	R1220-RS-B
Z122-E	(pg. 141)	R1220-RS-V
Z122-EB	(pg. 141)	R1220-RS-E
Z122-G	(pg. 141)	R1220-RS-M-13
Z122-HD	(pg. 141)	R1220-RS
Z122-R	(pg. 141)	R1220-RS-B
Z122-TC	(pg. 141)	R1220-RS-TC
Z122-90	(pg. 141)	R1220-RS-90
Z125	(pg. 122)	R1100-M
Z125-A	(pg. 122)	R1100-M-W-1
Z125-AR	(pg. 122)	R1100-M-11
Z125-BS	(pg. 122)	R1100-M-83
Z125-C	(pg. 122)	R1100-M-U
Z125-EB	(pg. 122)	R1100-M-E
Z125-FG	(pg. 125)	R1100-PR
Z125-DP	(pg. 122)	R1100-M-B
Z125-DR	(pg. 122)	R1100-M-EU
Z125-E	(pg. 122)	R1100-M-E
Z125-ERC	(pg. 122)	R1100-M-E-U
Z125-ES	(pg. 122)	R1100-M-E-U
Z125-G	(pg. 122)	R1100-M-13
Z125-R	(pg. 122)	R1100-M-B
Z125-SC	(pg. 122)	R1100-M-C
Z125-SS	(pg. 122)	R1100-M-83
Z125-SSM	(pg. 122)	R1100-M-83
Z125-TC	(pg. 122)	R1100-M-B
Z125-VP	(pg. 122)	R1100-M-6
Z125-XJ	(pg. 122)	R1100-M w/R1900
Z125-84	(pg. 123)	R1100-M-G
Z125-85	(pg. 124)	R1100-M-JC
Z125-89	(pg. 122)	R1100-M-R
Z125-90	(pg. 126)	R1100-M-90
ZA125	(pg. 122)	R1100-M-80
ZRB125	(pg. 122)	R1100-81
Z127	(pg. 125)	R1100-RS
Z127-AR	(pg. 125)	R1100-RS-11
Z127-C	(pg. 125)	R1100-RS-U
Z127-DP	(pg. 125)	R1100-RS-B
Z127-E	(pg. 125)	R1100-RS-E
Z127-EB	(pg. 125)	R1100-RS-E
Z127-G	(pg. 125)	R1100-RS-M-13
Z127-HD	(pg. 125)	R1100-RS
Z127-R	(pg. 125)	R1100-RS-B
Z127-TC	(pg. 125)	R1100-RS-TC
Z127-90	(pg. 125)	R1100-RS-90
Z130	(pg. 146)	R1200-SR
Z130-DR	(pg. 146)	R1200-SR-EU
Z130-EB	(pg. 146)	R1200-SR-E
Z130-84	(pg. 146)	R1200-SR-G
Z131	(pg. 146)	R1200-SR-R
Z131-DR	(pg. 146)	R1200-SR-R-EU
Z131-EB	(pg. 146)	R1200-SR-E
Z131-VP	(pg. 146)	R1200-SR-6
Z135-6	(pg. 84)	F1840
Z135-6-A	(pg. 84)	F1840-M-W-1
Z135-6-C	(pg. 84)	F1840-40
Z135-6-G	(pg. 84)	F1840-13
Z135-6-R	(pg. 84)	F1840-41
Z135-6-T	(pg. 84)	F1840-16
Z135-6-Y	(pg. 84)	F1840-5
ZN135	(pg. 84)	F1840-1
Z150	(pg. 133)	R1200-PR
Z150-A	(pg. 133)	R1200-PR-4-W-1
Z150-AR	(pg. 133)	R1200-PR-4-11
Z150-C	(pg. 133)	R1200-PR-4-U
Z150-DB	(pg. 142)	R1250-PR-4
Z150-DE	(pg. 133)	R1200-PR-4-B-EU
Z150-DG	(pg. 133)	R1200-PR-4
Z150-DP	(pg. 133)	R1200-PR-4-B
Z150-DR	(pg. 133)	R1200-PR-4-EU
Z150-DT	(pg. 133)	R1200-PR15
Z150-DX	(pg. 133)	R1200-PR-4-Z
Z150-E	(pg. 133)	R1200-PR-4-E
Z150-EA	(pg. 133)	R1200-PR-4-E
Z150-EB	(pg. 133)	R1200-PR-4-E
Z150-ES	(pg. 133)	R1200-C-PR-4-EU
Z150-G	(pg. 133)	R1200-PR-4-M-13
Z150-HF	(pg. 133)	R1200-PR-4

Design and dimensions are subject to modification. Prices do not include applicable taxes. Visit **www.mifab.com** for the most recent product information.
MIFAB®, Inc., 1321 West 119th Street, Chicago, Illinois 60643-5109, USA Toll Free: 1-800-465-2736 • Fax: 1-773-341-3049
All sales subject to MIFAB's® Terms & Warranties. Please refer to inside front cover. sales@mifab.com • Canada Toll Free: 1-800-387-3880

Z150-R	(pg. 133)	R1200-PR-4-B
Z150-S	(pg. 133)	R1200-PR-4-21
Z150-SC	(pg. 133)	R1200-PR-4-C
Z150-TC	(pg. 133)	R1200-PR-4-TC
Z150-TS	(pg. 133)	R1200-PR-4-6
Z150-VP	(pg. 133)	R1200-PR-4-6
Z150-XJ	(pg. 133)	R1200-PR-4 w/R1900
Z150-Y	(pg. 133)	R1200-PR-4-5
Z150-85	(pg. 133)	R1200-PR-4-JC
Z150-90	(pg. 133)	R1200-PR-4-90
ZB150	(pg. 133)	R1200-PR-1
ZN150	(pg. 133)	R1200-PR-1
Z154	(pg. 141)	R1220-PR
Z154-AR	(pg. 141)	R1220-PR-4-11
Z154-C	(pg. 141)	R1220-PR-4-U
Z154-DG	(pg. 141)	R1220-PR-4
Z154-DP	(pg. 141)	R1220-PR-4-B
Z154-DT	(pg. 141)	R1220-PR
Z154-G	(pg. 141)	R1220-PR-4-M-13
Z154-R	(pg. 141)	R1220-PR-4-B
Z154-S	(pg. 141)	R1220-PR-4-21
Z154-SC	(pg. 141)	R1220-PR-4-C
Z154-TS	(pg. 141)	R1220-PR-4-6
Z154-VP	(pg. 141)	R1220-PR-4-6
Z154-XJ	(pg. 141)	R1220-PR-4 w/R1900
Z154-Y	(pg. 141)	R1220-PR-4-5
Z154-85	(pg. 141)	R1220-PR-4-JC
Z154-90	(pg. 141)	R1220-PR-4-90
ZB154	(pg. 141)	R1220-PR-1
ZN154	(pg. 141)	R1220-PR-1
Z158	(pg. 125)	R1100-PR
Z158-AR	(pg. 125)	R1100-PR-4-11
Z158-C	(pg. 125)	R1100-PR-4-U
Z158-DG	(pg. 125)	R1100-PR-4
Z158-DT	(pg. 125)	R1100-PR
Z158-E	(pg. 125)	R1100-PR-4-E
Z158-G	(pg. 125)	R1100-PR-4-M-13
Z158-R	(pg. 125)	R1100-PR-4-B
Z158-SC	(pg. 125)	R1100-PR-4-C
Z158-TS	(pg. 125)	R1100-PR-4-6
Z158-VP	(pg. 125)	R1100-PR-4-6
Z158-XJ	(pg. 125)	R1100-PR-4 w/R1900
Z158-Y	(pg. 125)	R1100-PR-4-5
Z158-85	(pg. 124)	R1100-PJ-4
Z158-90	(pg. 125)	R1100-PR-4-90
ZB158	(pg. 125)	R1100-PR-1
ZN158	(pg. 125)	R1100-PR-1
Z160	(pg. 148)	R1300
Z161	(pg. 148)	R1300
Z163	(pg. 143)	R1270
Z163-AR	(pg. 143)	R1270-11
Z163-AW	(pg. 143)	R1270-W
Z163-BS	(pg. 143)	R1270-M-83
Z163-DR	(pg. 143)	R1270-M-EU
Z163-E	(pg. 143)	R1270-V
Z163-EA	(pg. 143)	R1270-E
Z163-G	(pg. 143)	R1270-M-13
Z163-GD	(pg. 143)	R1270-M-12
Z163-SC	(pg. 143)	R1270-C
Z163-SS	(pg. 143)	R1270-M-83
Z163-VP	(pg. 143)	R1270-6
Z163-W3	(pg. 143)	R1270-W3
Z163-W4	(pg. 143)	R1270-W4
Z163-XJ	(pg. 143)	R1270 w/R1900
Z163-84	(pg. 143)	R1270-G
Z163-85	(pg. 143)	R1270-JC
Z163-89	(pg. 143)	R1270-R
Z164	(pg. 143)	R1270-A5
Z164-AR	(pg. 143)	R1270-A5-11
Z164-BS	(pg. 143)	R1270-A5-83
Z164-E	(pg. 143)	R1270-A5-V
Z164-ES	(pg. 143)	R1270-A5-C-V
Z164-G	(pg. 143)	R1270-A5-13
Z164-SC	(pg. 143)	R1270-A5-C
Z164-SS	(pg. 143)	R1270-A5-83
Z164-VP	(pg. 143)	R1270-A5-6
Z164-XJ	(pg. 143)	R1270-A5 w/R1900
Z164-84	(pg. 143)	R1270-A5-G
Z164-85	(pg. 143)	R1270-A5-JC
Z165	(pg. 126)	R1150

Z165-AR	(pg. 126)	R1150-11
Z165-BS	(pg. 126)	R1150-M-83
Z165-E	(pg. 126)	R1150-V
Z165-G	(pg. 126)	R1150-M-13
Z165-SC	(pg. 126)	R1150-C
Z165-SS	(pg. 126)	R1150-M-83
Z165-VP	(pg. 126)	R1150-6
Z165-XJ	(pg. 126)	R1150 w/R1900
Z165-84	(pg. 126)	R1150-G
Z180	(pg. 150)	R1400
Z180-FS	(pg. 150)	R1400-14
Z180-G	(pg. 150)	R1400-13
Z180-HD	(pg. 150)	R1400-HM
Z180-VP	(pg. 150)	R1400-6
Z180-4	(pg. 150)	R1400
Z180-8	(pg. 150)	R1400
ZB180	(pg. 150)	R1400-2
ZN180	(pg. 150)	R1400-1
ZRB180	(pg. 150)	R1400-2RB
Z181	(pg. 150)	R1400
ZB181	(pg. 150)	R1400-2
ZN181	(pg. 150)	R1400-1
Z181-BS	(pg. 150)	R1400-83
Z181-C	(pg. 42)	F1100-C-K-40*
Z181-FS	(pg. 150)	R1400-14
Z181-G	(pg. 150)	R1400-13
Z181-HD	(pg. 150)	R1400-HM
Z181-R	(pg. 42)	F1100-C-K-40-41*
Z181-VP	(pg. 150)	R1400-6
Z181-8	(pg. 150)	R1400
Z182	(pg. 151)	R1420
ZB182	(pg. 151)	R1420-2
ZN182	(pg. 151)	R1420-1
ZRB182	(pg. 151)	R1420-2RB
Z182-FS	(pg. 151)	R1420-14
Z182-G	(pg. 151)	R1420-13
Z182-HD	(pg. 151)	R1420-HM
Z182-VP	(pg. 151)	R1420-6
Z182-45	(pg. 151)	R1410
Z185	(pg. 151)	R1420
ZB185	(pg. 151)	R1420-2
ZN185	(pg. 151)	R1420-1
Z185	(pg. 151)	R1420
Z185-FS	(pg. 151)	R1420-14
Z185-G	(pg. 151)	R1420-13
Z185-HD	(pg. 151)	R1420-HM
Z185-VP	(pg. 151)	R1420-6
Z185-45	(pg. 151)	R1410
Z187	(pg. 148)	R1300T
Z187-BS	(pg. 148)	R1300T-83
Z187-FG	(pg. 149)	R1320T
Z187-G	(pg. 148)	R1300T-13
Z187-TS	(pg. 148)	R1300T-6
Z187-V	(pg. 285)	BV1210
Z187-VP	(pg. 148)	R1300T-6
ZB187	(pg. 148)	R1300T-2
ZN187	(pg. 148)	R1300T-1
ZRB187	(pg. 148)	R1300T-2RB
Z189	(pg. 149)	R1330T
Z189-BS	(pg. 149)	R1330T-83
Z189-G	(pg. 149)	R1330T-13
Z189-OB	(pg. 148)	R1310T
Z189-TS	(pg. 149)	R1330T-6
Z189-VP	(pg. 149)	R1330T-6
ZN189-90	(pg. 149)	R1330T
ZB189	(pg. 149)	R1330T-2
ZN189	(pg. 149)	R1330T-1
Z190	(pg. 155)	R1900
Z191	(pg. 152)	R1520
Z191-CA	(pg. 152)	R1520-CA
Z191-G	(pg. 152)	R1520-13
Z191-RD	(pg. 153)	R1530
Z191-RD-G	(pg. 153)	R1530-13
Z192	(pg. 152)	R1510
Z192-G	(pg. 152)	R1510-13
Z192-12	(pg. 152)	R1510-12
Z192-18	(pg. 152)	R1510-18
Z192-24	(pg. 152)	R1510-24
Z193	(pg. 155)	R1930
Z195	(pg. 154)	R1850

Z196		R1850
Z197		R1850
Z198	(pg. 153)	R1640
Z198-G	(pg. 153)	R1640-13
Z198-8	(pg. 153)	R1640-8
Z198-11	(pg. 153)	R1640-11
Z198-13	(pg. 153)	R1640-13
Z198-17	(pg. 153)	R1640-17
Z198-22	(pg. 153)	R1640-22
Z199	(pg. 156)	R1940
Z199-DC	(pg. 158)	R1960
Z199-10”	(pg. 156)	R1950
ZAB199	(pg. 156)	R1940-2
ZANB199	(pg. 156)	R1940-1
ZARB199	(pg. 156)	R1940-2RB
ZS110-9	(pg. 159)	R1100-28-G8H
ZS110-9-AI	(pg. 159)	R1100-28-G8H-AI
ZS199-HC	(pg. 158)	R1960

ROOF DRAIN OPTIONAL VARIATIONS

ZURN PREFIX		MIFAB SUFFIX
Z	Poly dome	Std.
ZA	Aluminum dome	M-80
ZAB	PB	-2
ZANB	NB	-1
ZARB	Bronze body/grate	-2RB
ZB	PB dome/grate	-2
ZC	Cast iron dome	-M
ZN	NB dome/grate	-1
ZRB	Bronze dome/grate	-81
ZURN	SUFFIXES	MIFAB
-AC	Deck clamp	-U
-AR	Acid res. epoxy coating	-11
-AW	Adjustable water dam	-W
-BS	SS mesh scr. over dome	-83
-C	Underdeck clamp	-U
-DB	Deep sump body	R1250
-DE	Deck Extension	-B-EU
-DG	Ductile iron grate	-4
-DP	Roof deck plate	-B
-DR	Top Set drain riser	-EU
-DS	Deep sump body	R1250
-DX	Extended wide flange	-Z
-E	Fixed extension	-V
-EA	Adjustable extension	-E
-EB	Extension	-E
-F	Flat grate	-14
-FG	Flush grate	R1320/R1330
-FS	Flat strainer	-14
-G	All galvanized	-13
-GD	Galvanized metal dome	-M-12
-HD	Aluminum dome strainer	-M-80
-IC	Inside caulk connection	X
-IP	Threaded connection	T
-NH	No hub connection	Std.
-NL	Push on connection	P
-R	Sump receiver	-B
-RD	Round inlet and outlet	R1530
-S	Secondary strainer	-21
-SC	Secondary clamp	-C
-SD	Standpipe	-W
-SS	SS mesh covered dome	-83
-SSM	SS mesh covered dome	-83
-T	Square top	-16
-TC	Push on gasket w/ test cap	-TC
-TS	Vandal proof	-6
-VP	Vandal proof	-6
-W2	2” Internal water dam	-W2
-W3	3” Internal water dam	-W3
-W4	4” Internal water dam	-W4
-XJ	Expansion joint	R1900
-Y	Sediment bucket	-5
-10	Parabolic weir	-F
-84	Ballast guard	-G
-85	Ballast grd with sec.clamp	-JC
-89	2” external water dam	-R
-90	Threaded side outlet body	-90

FLOOR AND AREA DRAINS

ZURN		MIFAB
Z210	(pg. 315)	A1 body
Z211	(pg. 315)	A1 body
Z211-G	(pg. 315)	A1-13 body
Z211-P	(pg. 315)	A1 body
Z211-210	(pg. 315)	A1 body
ZN211-B	(pg. 37)	F1100-1
ZN211-B-G	(pg. 37)	F1100-1-13
ZN211-B-P	(pg. 37)	F1100-1-7
ZN211-B-VP	(pg. 37)	F1100-1-6
ZN211-B-X	(pg. 37)	F1100-1-8
ZN211-B-Y	(pg. 37)	F1100-1-5
ZN-211-B-210	(pg. 37)	F1100-1
ZN211-B-210-WD	(pg. 47)	F1100-Z-1
ZN211-BE	(pg. 39)	F1100-EF-1
ZN211-BE-G	(pg. 39)	F1100-EF-1-13
ZN211-BE-P	(pg. 39)	F1100-EF-1-7
ZN211-BE-VP	(pg. 39)	F1100-EF-1-6
ZN211-BE-X	(pg. 39)	F1100-EF-1-8
ZN211-BE-Y	(pg. 39)	F1100-EF-1-5
ZN211-BE-210	(pg. 39)	F1100-EF-1
ZN211-BF	(pg. 39)	F1100-EG-1
ZN211-BF-G	(pg. 39)	F1100-EG-1-13
ZN211-BF-P	(pg. 39)	F1100-EG-1-7
ZN211-BF-VP	(pg. 39)	F1100-EG-1-6
ZN211-BF-X	(pg. 39)	F1100-EG-1-8
ZN211-BF-Y	(pg. 39)	F1100-EG-1-5
ZN211-BF-210	(pg. 39)	F1100-EG-1
ZN211-F	(pg. 39)	F1100-EG-1
ZN211-F-G	(pg. 39)	F1100-EG-1-13
ZN211-F-P	(pg. 39)	F1100-EG-1-7
ZN211-F-VP	(pg. 39)	F1100-EG-1-6
ZN211-F-X	(pg. 39)	F1100-EG-1-8
ZN211-F-210	(pg. 39)	F1100-EG-1
ZN211-Y	(pg. 43)	F1100-S-1
ZN211-Y-G	(pg. 43)	F1100-S-1-13
ZN211-Y-P	(pg. 43)	F1100-S-1-7
ZN211-Y-VP	(pg. 43)	F1100-S-1-6
ZN211-Y-X	(pg. 43)	F1100-S-1-8
ZN211-Y-Y	(pg. 43)	F1100-S-1-5
ZN211-Y-210	(pg. 43)	F1100-S-1
ZX211-A	(pg. 37)	F1100-4
ZX211-A5	(pg. 37)	F1100-5-4
ZX211-A-G	(pg. 37)	F1100-4-13
ZX211-A-P	(pg. 37)	F1100-4-7

"X" Contact MIFAB

ZX211-A-VP	(pg. 37)	F1100-4-6
ZX211-A-X	(pg. 37)	F1100-4-8
ZX211-A-Y	(pg. 37)	F1100-4-5
ZX211-A-210	(pg. 37)	F1100-4
ZX211-Y	(pg. 43)	F1100-S8-4
ZX211-Y-G	(pg. 43)	F1100-S8-4-13
ZX211-Y-P	(pg. 43)	F1100-S8-4-7
ZX211-Y-VP	(pg. 43)	F1100-S8-4-6
ZX211-Y-X	(pg. 43)	F1100-S8-4-8
ZX211-Y-Y	(pg. 43)	F1100-S8-4-5
ZX211-Y-210	(pg. 43)	F1100-S8-4
ZXN211-A	(pg. 46)	F1100-X-1
ZXN211-A5	(pg. 46)	F1100-X5-1
ZXN211-A6	(pg. 46)	F1100-X6-1
ZXN211-A-G	(pg. 46)	F1100-X-1-13
ZXN211-A-P	(pg. 46)	F1100-X-1-7
ZXN211-A-VP	(pg. 46)	F1100-X-1-6
ZXN211-A-X	(pg. 46)	F1100-X-1-8
ZXN211-A-Y	(pg. 46)	F1100-X-1-5
ZXN211-A-210	(pg. 46)	F1100-X-1
ZXN211-H	(pg. 47)	F1100-XS6-1
ZXN211-H-G	(pg. 47)	F1100-XS6-1-13
ZXN211-H-P	(pg. 47)	F1100-XS6-1-7
ZXN211-H-VP	(pg. 47)	F1100-XS6-1-6
ZXN211-H-X	(pg. 47)	F1100-XS6-1-8
ZXN211-H-Y	(pg. 47)	F1100-XS6-1-5
ZXN211-H-210	(pg. 47)	F1100-XS6-1
ZXN211-Y	(pg. 47)	F1100-XS8-1
ZXN211-Y8	(pg. 47)	F1100-XS8-1
ZXN211-Y-G	(pg. 47)	F1100-XS8-1-13
ZXN211-Y-P	(pg. 47)	F1100-XS8-1-7
ZXN211-Y-VP	(pg. 47)	F1100-XS8-1-6
ZXN211-Y-X	(pg. 47)	F1100-XS8-1-8
ZXN211-Y-Y	(pg. 47)	F1100-XS8-1-5
ZXN211-Y-210	(pg. 47)	F1100-XS8-1
Z221	(pg. 56)	F1240
Z221-G	(pg. 56)	F1240-13
Z221-P	(pg. 56)	F1240-7
Z221-VP	(pg. 56)	F1240-6
Z221-X	(pg. 56)	F1240-8
Z221-Y	(pg. 56)	F1240-5
Z300	(pg. 80)	F1650-G
ZB300	(pg. 80)	F1650-G-1
ZN300	(pg. 80)	F1650-G-1
ZN300-C	(pg. 80)	F1650-G-1
ZN300-DX	(pg. 80)	F1650-G-1-Z
ZN300-FG	(pg. 80)	F1650-G-1-A
ZN300-IG	(pg. 80)	F1650-G-1-6
ZN300-NE		..... "X"
ZN300-ST		..... "X"
ZN300-VP	(pg. 80)	F1650-G-1-6
ZN300-WB	(pg. 80)	F1670
Z310	(pg. 80)	F1650
ZB310	(pg. 80)	F1650-1
ZN310	(pg. 80)	F1650-1
ZN310-C	(pg. 80)	F1650-1
ZN310-DX	(pg. 80)	F1650-1-Z
ZN310-FG	(pg. 80)	F1650-1-A
ZN310-IG	(pg. 80)	F1650-1-6
ZN310-ST		..... "X"
ZN310-VP	(pg. 80)	F1650-1-6
ZN310-WB	(pg. 80)	F1670
Z315	(pg. 57)	F1320-25-1
ZB315	(pg. 57)	F1320-25-1
ZN315	(pg. 57)	F1320-25-1
ZN315-G	(pg. 57)	F1320-25-1-13
ZN315-HL	(pg. 57)	F1320-25-1-6
ZN315-P	(pg. 57)	F1320-25-1-7
ZN315-TC	(pg. 57)	F1320-25-1-TC
ZN315-V	(pg. 57)	F1320-25-1-8
Z319	(pg. 80)	F1660
ZB319	(pg. 80)	F1660-1
ZN319	(pg. 80)	F1660-1
ZN319-DX	(pg. 80)	F1660-1-Z
ZN319-G	(pg. 80)	F1660-1-13
ZN319-P	(pg. 80)	F1660-1-7
ZN319-V	(pg. 80)	F1660-1-8
ZN319-VP	(pg. 80)	F1660-1-6
ZN319-WB	(pg. 80)	F1670
ZN319-Y	(pg. 80)	F1660-1-5
Z320	(pg. 80)	F1650-ER9-HG5-3-11
ZB320	(pg. 80)	F1650-ER9-HG5-3-11
ZN320	(pg. 80)	F1650-ER9-HG5-3-11
ZN320-DC	(pg. 80)	F1650-ER9-HG5-3
ZN320-G	(pg. 80)	F1650-ER9-HG5-3-11-13
ZN320-V	(pg. 80)	F1650-ER9-HG5-3-8-11
ZN320-VP	(pg. 80)	F1650-ER9-HG5-3-6-11
ZN320-WB	(pg. 80)	F1670
Z325	(pg. 81)	F1790
Z325-DB	(pg. 81)	F1790-21
Z325-G	(pg. 81)	F1790-13
Z325-S	(pg. 81)	F1790-21
Z326	(pg. 81)	F1780
Z326-AR	(pg. 81)	F1780-11
Z326-DB	(pg. 81)	F1780-21
Z326-G	(pg. 81)	F1780-13
Z326-S	(pg. 81)	F1780-21
Z328	(pg. 50)	-F4
Z328-4	(pg. 50)	F4-50
Z328-6	(pg. 50)	F6-50
ZB328-4	(pg. 50)	F4-1
ZB328-6	(pg. 50)	F6-1
ZN328-4	(pg. 50)	F4-1
ZN328-6	(pg. 50)	F6-1
Z328-AR	(pg. 50)	F4-50-11
Z328-G	(pg. 50)	F4-50-11
Z329	(pg. 50)	G
Z329-7	(pg. 50)	J-50
Z329-9	(pg. 50)	G-50
ZB329-7	(pg. 50)	J-1
ZB329-9	(pg. 50)	G-1
ZN329-7	(pg. 50)	J-1
ZN329-9	(pg. 50)	G-1
Z329-AR	(pg. 50)	G-50-11
Z329-G	(pg. 50)	G-50-11
Z348	(pg. 82)	F1820
ZB348	(pg. 82)	F1820-81
Z348-G	(pg. 82)	F1820-13
Z348-TC	(pg. 82)	F1820-TC
Z349	(pg. 83)	F1830-PL-50
ZB349	(pg. 83)	F1830-PL
ZN349	(pg. 83)	F1830-PL
ZN349-C	(pg. 83)	F1830-PL-3-40
ZN349-G	(pg. 83)	F1830-PL-3-13
ZN349-SD	(pg. 83)	F1830-PL-3-79
ZN349-SS	(pg. 83)	F1830-PL-3-83
Z350	(pg. 83)	F1830-P
ZB350	(pg. 83)	F1830-P-3
ZN350	(pg. 83)	F1830-P-3
ZN350-C	(pg. 83)	F1830-P-3-40
ZN350-G	(pg. 83)	F1830-P-3-13
ZN350-P	(pg. 83)	F1830-P-3-7
ZN350-PL	(pg. 83)	F1830-P-3
ZN350-PS	(pg. 83)	F1830-P-3-43
ZN350-SD	(pg. 83)	F1830-P-3-79
ZN350-SS	(pg. 83)	F1830-P-3-83
Z352	(pg. 82)	F1810
Z352-G	(pg. 82)	F1810-13

"X" Contact MIFAB

Z352-VP	(pg. 82)	F1810-6
Z352-45	(pg. 82)	F1810-45
Z352-90	(pg. 82)	F1810-90
ZRB352	(pg. 82)	F1810-81
Z355	(pg. 53)	F1160
ZB355	(pg. 53)	F1160-1
ZN355	(pg. 53)	F1160-1
ZN355-CP	(pg. 53)	F1160-49
ZN355-G	(pg. 53)	F1160-1-13
Z356	(pg. 54)	F1170
ZB356	(pg. 54)	F1170-C-5-1*
ZN356	(pg. 54)	F1170-C-5-1*
ZN356-BP	(pg. 54)	F1170-C-5-1-34B*
ZN356-G	(pg. 54)	F1170-C-5-1-13*
ZN356-J	(pg. 54)	F1170-C-5-1*
ZN356-J2	(pg. 54)	F1170-C-5-1*
ZN356-J3	(pg. 54)	F1170-C-5-1*
ZN356-VP	(pg. 54)	F1170-C-5-1-6*
Z400-M	(pg. 50)	5-1-TFB
Z400-N	(pg. 50)	N
Z400-7N	(pg. 50)	N7
Z400-9N	(pg. 50)	N9
Z400-SR	(pg. 85)	F1900
Z400-U	(pg. 50)	DD-50
Z400-18	(pg. 51)	SPR
ZB400-B	(pg. 50)	5-1
ZB400-5B	(pg. 50)	5-2
ZB400-6B	(pg. 50)	6-1
ZB400-7B	(pg. 50)	7-1
ZB400-8B	(pg. 50)	8-1
ZB400-10B	(pg. 50)	10-1
ZB400-BL	(pg. 51)	Z5-1
ZB400-C	(pg. 50)	HG-3
ZB400-D	(pg. 51)	VD-3
ZB400-E	(pg. 50)	EF-1
ZB400-G	(pg. 50)	K-1
ZB400-H	(pg. 50)	FC-1 (specify dia.)
ZB400-I	(pg. 50)	ER-1 (specify dia.)
ZB400-J	(pg. 50)	RS-1 (specify size)
ZB400-K	(pg. 50)	AS-1
ZB400-M	(pg. 50)	5-2-TFB
ZB400-N	(pg. 50)	N-1 (specify dia.)
ZB400-O	(pg. 50)	FT6-1
ZB400-P	(pg. 51)	WD-3
ZB400-S	(pg. 51)	S5-1 (specify size)
ZB400-5S	(pg. 51)	S5-2
ZB400-6S	(pg. 51)	S6-1
ZB400-7S	(pg. 51)	S8-1
ZB400-8S	(pg. 51)	S8-1

Design and dimensions are subject to modification. Prices do not include applicable taxes. Visit **www.mifab.com** for the most recent product information.
MIFAB®, Inc., 1321 West 119th Street, Chicago, Illinois 60643-5109, USA Toll Free: 1-800-465-2736 • Fax: 1-773-341-3049
All sales subject to MIFAB's® Terms & Warranties. Please refer to inside front cover. sales@mifab.com • Canada Toll Free: 1-800-387-3880

ZB400-9S	(pg. 51)	S10-1
ZB400-10S	(pg. 51)	S10-1
ZB400-SC	(pg. 51)	SD6-3
ZB400-SH	(pg. 51)	SHG-3 (specify size)
ZB400-SL	(pg. 51)	ZS-1
ZB400-T	(pg. 51)	T-3 (specify dia.)
ZN400-5B	(pg. 50)	5-2
ZN400-6B	(pg. 50)	6-1
ZN400-7B	(pg. 50)	7-1
ZN400-8B	(pg. 50)	8-1
ZN400-10B	(pg. 50)	10-1
ZN400-BF	(pg. 50)	EG-1
ZN400-BL	(pg. 51)	Z5-1
ZN400-BZ	(pg. 51)	5-1-CL
ZN400-C	(pg. 50)	HG-3
ZN400-D	(pg. 51)	VD-3
ZN400-E	(pg. 50)	EF-1
ZN400-F	(pg. 50)	EG-1
ZN400-G	(pg. 50)	K-1
ZN400-H	(pg. 50)	FC-1 (specify dia.)
ZN400-I	(pg. 50)	ER-1 (specify dia.)
ZN400-J	(pg. 50)	RS-1 (specify size)
ZN400-K	(pg. 50)	AS-1
ZN400-M	(pg. 50)	5-1-TFB
ZN400-N	(pg. 50)	N-1 (specify dia.)
ZN400-O	(pg. 50)	FT6-1
ZN400-P	(pg. 51)	WD-3
ZN400-R	(pg. 50)	FC-1
ZN400-S (CAN)	(pg. 50)	DD-1
ZN400-S (USA)	(pg. 51)	S5-1 (spec.size)
ZN400-5S	(pg. 51)	S5-1
ZN400-6S	(pg. 51)	S6-1
ZN400-7S	(pg. 51)	S8-1
ZN400-8S	(pg. 51)	S8-1
ZN400-9S	(pg. 51)	S10-1
ZN400-10S	(pg. 51)	S10-1
ZN400-SC	(pg. 51)	SD6-1
ZN400-SH	(pg. 51)	SHG-3 (specify size)
ZN400-SL	(pg. 51)	ZS-1
ZN400-SZ	(pg. 51)	S5-1
ZN400-T	(pg. 51)	T-3 (specify size)
ZN400-U	(pg. 50)	DD-1
ZN400-Y	(pg. 51)	S5-1 (specify size)
ZS400-B	(pg. 50)	5-3* (Spec. dia.)
ZS400-5B	(pg. 50)	5-3
ZS400-6B	(pg. 50)	6-3
ZS400-7B	(pg. 50)	7-3
ZS400-8B	(pg. 50)	8-3
ZS400-10B	(pg. 50)	10-3
ZS400-S	(pg. 51)	S5-3 (Spec. size)
ZX400-A	(pg. 50)	5-4
ZX400-Y	(pg. 51)	S8-4
ZXN400-A	(pg. 51)	X-1 (specify size)
ZXN400-H	(pg. 51)	XS6-1
ZXN400-Y	(pg. 51)	XS8-1
Z414	(pg. 50)	F-50
Z414-1	(pg. 50)	G-50
Z414-4	(pg. 50)	F4-50
Z414-6	(pg. 50)	F6-50
ZN414	(pg. 50)	F-1
ZN414-1	(pg. 50)	G-1
ZN414-4	(pg. 50)	F4-1
ZN414-6	(pg. 50)	F6-1
Z415 body	(pg. 315)	A1 body w/A1-C2
Z415	(pg. 37)	F1100-C*
Z415-B	(pg. 37)	F1100-C*
Z415-BF	(pg. 39)	F1100-C-EG*
Z415-BL	(pg. 47)	F1100-C-Z*
Z415-BZ	(pg. 37)	F1100-C*
Z415-C	(pg. 41)	F1000-C-HG*
Z415-D	(pg. 45)	F1000-C-VD*
Z415-E	(pg. 39)	F1100-C-EF*
Z415-G	(pg. 42)	F1100-C-K*
Z415-H	(pg. 40)	F1100-C-FC*
Z415-I	(pg. 40)	F1100-C-ER*
Z415-J	(pg. 43)	F1100-C-RS*
Z415-K	(pg. 38)	F1100-C-AS*
Z415-M	(pg. 37)	F1100-C-5-3-TFB*
Z415-N	(pg. 42)	F1100-C-N*
Z415-O	(pg. 41)	F1100-C-FT6*

Z415-P	(pg. 46)	F1100-C-WD*
Z415-S (CAN)	(pg. 38)	F1100-C-DD*
Z415-S (USA)	(pg. 43)	F1100-C-S*
Z415-SC	(pg. 44)	F1100-C-SD6*
Z415-SH	(pg. 44)	F1000-C-SHG*
Z415-SL	(pg. 48)	F1100-C-ZS*
Z415-SZ	(pg. 37)	F1100-C*
Z415-T	(pg. 45)	F1000-C-T*
ZN415-B	(pg. 37)	F1100-C-5-1*
ZN415-BL	(pg. 47)	F1100-C-Z5-1*
ZN415-C	(pg. 41)	F1000-C-HG-3*
ZN415-D	(pg. 45)	F1000-C-VD-3*
ZN415-E	(pg. 39)	F1100-C-EF-1*
ZN415-G	(pg. 42)	F1100-C-K-1*
ZN415-H	(pg. 40)	F1100-C-FC7-1*
ZN415-I	(pg. 40)	F1100-C-ER-1*
ZN415-J	(pg. 43)	F1100-C-RS-1*
ZN415-K	(pg. 38)	F1100-C-AS-1*
ZN415-M	(pg. 37)	F1100-C-5-3-TFB*
ZN415-N	(pg. 42)	F1100-C-N-1*
ZN415-O	(pg. 41)	F1100-C-FT6-1*
ZN415-P	(pg. 46)	F1100-C-WD-3*
ZN415-S	(pg. 43)	F1100-C-S-1*
ZN415-SC	(pg. 44)	F1100-C-SD6-3*
ZN415-SH	(pg. 44)	F1000-C-SHG-3*
ZN415-SL	(pg. 48)	F1100-C-ZS-1*
ZN415-T	(pg. 45)	F1000-C-T-3*
ZN415-M	(pg. 37)	F1100-C-5-1-TFB*
ZN415-Y	(pg. 47)	F1000-C-XS-1*
ZX415-A	(pg. 37)	F1100-C-5-4*
ZS415-B	(pg. 37)	F1000-C*
ZS415-S	(pg. 43)	F1000-C-S*
ZX415-Y8	(pg. 47)	F1100-C-XS8-4*
ZXN415-A	(pg. 47)	F1100-C-XSG-1*
ZXN415-H	(pg. 47)	F1100-C-XS6-1*
Z420	(pg. 55)	F1212TC
Z450	(pg. 52)	F1120-C*
Z450-B	(pg. 52)	F1120-C*
ZB450-B	(pg. 52)	F1120-C-1*
ZN450-B	(pg. 52)	F1120-C-1*
Z451	(pg. 52)	F1120-C*
Z453	(pg. 52)	F1120-C*
Z453-B	(pg. 52)	F1120-C*
ZB453-B	(pg. 52)	F1120-C-1*
ZN453-B	(pg. 52)	F1120-C-1*
Z455	(pg. 52)	F1130C
Z455-B	(pg. 52)	F1130C
ZB455-B	(pg. 52)	F1130C-1
ZN455-B	(pg. 52)	F1130C-1
Z456	(pg. 52)	F1130C
Z456-B	(pg. 52)	F1130C
ZB456-B	(pg. 52)	F1130C-1
ZN456-B	(pg. 52)	F1130C-1
Z460B	(pg. 48)	F1100-90
Z461	(pg. 51)	S5-1 with MI-HUB-42
Z499B	(pg. 22)	All Star Cover
Z499S	(pg. 22)	All Star Cover
Z503	(pg. 65)	F1360-Y
ZB503	(pg. 65)	F1360-Y-1
ZN503	(pg. 65)	F1360-Y-1
Z504	(pg. 62)	F1340-Y-Q-14-4
ZN504	(pg. 62)	F1340-Y-Q-14-1
Z504-T	(pg. 69)	F1440-Y-Q-14-4
Z505	(pg. 60)	F1340-Y-14-4
ZN505	(pg. 68)	F1440-Y-14-4
Z505-T	(pg. 68)	F1440-Y-14-1
Z506	(pg. 62)	F1340-Y-Q-14-90-4
Z507	(pg. 56)	F1300-C-Y-4*
ZB507	(pg. 56)	F1300-C-Y-1*
ZN507	(pg. 56)	F1300-C-Y-1*
Z508	(pg. 57)	F1320-C-Y-4*
ZB508	(pg. 57)	F1320-C-Y-1*
ZN508	(pg. 57)	F1320-C-Y-1*
Z509	(pg. 62)	F1340-C-Y-Q-4*
Z509-T	(pg. 69)	F1440-Y-Q-4
ZB509	(pg. 62)	F1340-C-Y-Q-1*
ZN509	(pg. 62)	F1340-C-Y-Q-1*
Z511	(pg. 59)	F1330C-4
ZB511	(pg. 59)	F1330C-1
ZN511	(pg. 59)	F1330C-1

Z512	(pg. 60)	F1340-Y-4
ZN512	(pg. 60)	F1340-Y-1
Z512-T	(pg. 68)	F1440-Y-14-4
Z513	(pg. 67)	F1430C-5-4
ZB513	(pg. 67)	F1430C-5-1
ZN513	(pg. 67)	F1430C-5-1
Z516	(pg. 60)	F1340-C-14-4*
Z517	(pg. 59)	F1330C-33-4
ZB517	(pg. 59)	F1330C-33-1
ZN517	(pg. 59)	F1330C-33-1
Z520	(pg. 57)	F1320-C-4*
Z520-T	(pg. 67)	F1420-C-4*
Z521	(pg. 60)	F1340-4
Z521-T	(pg. 68)	F1440-4
ZB521	(pg. 60)	F1340-1
ZB521-T	(pg. 68)	F1440-1
ZN521	(pg. 60)	F1340-1
ZN521-T	(pg. 68)	F1440-1
Z525	(pg. 57)	F1320-C-14-4*
ZN525	(pg. 57)	F1320-C-14-1*
Z525-T	(pg. 67)	F1420-C-Y-4*
Z526	(pg. 60)	F1340-14-4
ZN526	(pg. 60)	F1340-14-1
Z526-T	(pg. 68)	F1440-Y-14-4
Z529	(pg. 57)	F1320-25-1
ZB529	(pg. 57)	F1320-25-1
ZN529	(pg. 57)	F1320-25-1
Z530	(pg. 57)	F1320-Y-14-Z-4-5
ZB530	(pg. 57)	F1320-Y-14-Z-1-5
ZN530	(pg. 57)	F1320-Y-14-Z-1-5
Z531	(pg. 57)	F1320-C-Z-4*
ZB531	(pg. 57)	F1320-C-Z-1*
ZN531	(pg. 57)	F1320-C-Z-1*
Z532	(pg. 60)	F1340-14-5-Z-4
ZB532	(pg. 60)	F1340-14-5-Z-1
ZN532	(pg. 60)	F1340-14-5-Z-1
Z533	(pg. 74)	F1530
ZB533	(pg. 74)	F1530-1
ZN533	(pg. 74)	F1530-1
Z534 (CAN)	(pg. 60)	F1340-4
ZN534 (CAN)	(pg. 60)	F1340-1
ZB534 (CAN)	(pg. 60)	F1340-1
Z534 (USA)	(pg. 75)	F1540-4
ZB534 (USA)	(pg. 75)	F1540-1
ZN534 (USA)	(pg. 75)	F1540-1
Z535	(pg. 74)	F1510-80
Z536 (CAN)	(pg. 57)	F1320-C-14-4*
ZN536 (CAN)	(pg. 57)	F1320-C-14-1*
Z536 (USA)	(pg. 75)	F1550
ZB536 (USA)	(pg. 75)	F1550-1
ZN536 (USA)	(pg. 75)	F1550-1
Z537	(pg. 75)	F1550-16
ZB537	(pg. 75)	F1550-16-1
ZN537	(pg. 75)	F1550-16-1
Z538 (CAN)	(pg. 57)	F1320-C-4*
ZN538 (CAN)	(pg. 57)	F1320-C-1*
Z538 (USA)	(pg. 63)	F1350-C-TFB-4*
ZB538 (USA)	(pg. 63)	F1350-C-TFB-1*
ZN538 (USA)	(pg. 63)	F1350-C-TFB-1*
Z539-T	(pg. 70)	F1450
Z539	(pg. 63)	F1350-C-4-5*
ZN539	(pg. 63)	F1350-C-1-5*
Z540	(pg. 61)	F1340-C-TFB-4*
ZB540	(pg. 61)	F1340-C-TFB-1*
ZN540	(pg. 61)	F1340-C-TFB-1*
Z541	(pg. 60)	F1340-C-Y-14-5-4*
ZB541	(pg. 60)	F1340-C-Y-14-1-5*
ZN541	(pg. 60)	F1340-C-Y-14-1-5*
Z543	(pg. 66)	F1370-C-Y-14-5-4*
ZB543	(pg. 66)	F1370-C-Y-14-5-1*
ZN543	(pg. 66)	F1370-C-Y-14-5-1*
Z544	(pg. 65)	F1360-Y-5
Z545	(pg. 65)	F1360-C-Y-14-4*
Z546		..... "X"
Z547		..... "X"
Z548	(pg. 66)	F1370-17-4
ZB548	(pg. 66)	F1370-17-1
ZN548	(pg. 66)	F1370-17-1
Z550	(pg. 57)	F1320-C-Y-14-4*
ZB550	(pg. 57)	F1320-C-Y-14-1*

ZN550	(pg. 57)	F1320-C-Y-14-1*
Z551	(pg. 56)	F1240
ZB551	(pg. 56)	F1240-1
Z533	(pg. 74)	F1530
Z554	(pg. 58)	F1320-C-TFB-4*
ZB554	(pg. 58)	F1320-C-TFB-1*
ZN554	(pg. 58)	F1320-C-TFB-1*
Z555	(pg. 56)	F1300-C-4*
ZN555	(pg. 56)	F1300-C-1*
Z556 (CAN)	(pg. 56)	F1300-C-4*
Z556 (USA)	(pg. 56)	F1300-C-4*
ZN556 (CAN)	(pg. 56)	F1300-C-1*
ZN556 (USA)	(pg. 56)	F1300-C-1
Z560	(pg. 67)	F1420
Z566	(pg. 84)	F1860
Z566-GT	(pg. 84)	F1860-16-4
ZB566	(pg. 84)	F1860-1
ZB566-GT	(pg. 84)	F1860-16-1
ZN566	(pg. 84)	F1860-1
ZN566-GT	(pg. 84)	F1860-16-1
Z568	(pg. 84)	F1870
Z568-GT	(pg. 84)	F1870-16-4
ZB568	(pg. 84)	F1870-1
ZB568-GT	(pg. 84)	F1870-16-1
ZN568	(pg. 84)	F1870-1
ZN568-GT	(pg. 84)	F1870-161
Z573	(pg. 50)	RS48-NH-1
Z574	(pg. 50)	RS412-NH
ZB574	(pg. 50)	RS412-NH-1
ZN574	(pg. 50)	RS412-NH-1
Z575	(pg. 81)	F1760-FL-4-22
ZB575	(pg. 81)	F1760-FL-1-22
ZN575	(pg. 81)	F1760-FL-1-22
Z576	(pg. 81)	F1760-FL-4
ZB576	(pg. 81)	F1760-FL-3
ZN576	(pg. 81)	F1760-FL-3
Z585	(pg. 67)	F1430-C-Y-4-5*
ZB585	(pg. 68)	F1440-Y-14-4
ZN585	(pg. 68)	F1440-Y-14-4
Z586	(pg. 81)	F1760-FL
ZN586	(pg. 81)	F1760-FL-3
Z587	(pg. 67)	F1420-Y-4
Z609	(pg. 67)	F1420-C-Y-14-4*
ZB609	(pg. 67)	F1420-C-Y-14-1*
ZN609	(pg. 67)	F1420-C-Y-14-1*
Z610	(pg. 68)	F1440-C-Y-5-4*
ZB610	(pg. 68)	F1440-C-Y-5-1*
ZN610	(pg. 68)	F1440-C-Y-5-1*
Z610-H	(pg. 68)	F1440-Y-4
ZN610-H	(pg. 68)	F1440-Y-1
Z610-H-ADJ	(pg. 68)	F1440-C*
ZN610-H-ADJ	(pg. 68)	F1440-C-1*
Z611	(pg. 67)	F1430C-Y-4
ZB611	(pg. 67)	F1430C-Y-1
ZN611	(pg. 67)	F1430C-Y-1
Z624	(pg. 78)	F1620-C-4
ZB624	(pg. 78)	F1620-C-1
ZN624	(pg. 78)	F1620-C-1
Z625	(pg. 78)	F1600-C*
ZB625	(pg. 78)	F1600-C*
ZN625	(pg. 78)	F1600-C*
ZAL625-HY	(pg. 74)	F1510-80
Z626	(pg. 173)	C1200-C-R*
ZB626	(pg. 173)	C1200-C-R-1*
ZN626	(pg. 173)	C1200-C-R-1*
Z627	(pg. 78)	F1620-C
ZB627	(pg. 78)	F1620-C-1*
ZN627	(pg. 78)	F1620-C-1*
Z629	(pg. 285)	BV1210
ZB629	(pg. 285)	BV1210-1
ZN629	(pg. 285)	BV1210-1
Z645	(pg. 76)	F1560
ZB645	(pg. 76)	F1560-3
ZN645	(pg. 76)	F1560-3
Z662	(pg. 71)	F1460-C-Y-5-4*
ZB662	(pg. 71)	F1460-C-Y-5*
Z662-HF	(pg. 71)	F1460-C-Y-5*
Z664	(pg. 91)	T1320-FL-4
ZB664	(pg. 91)	T1320-FL-3
ZN664	(pg. 91)	T1320-FL-3
Z665	(pg. 91)	T1350-FL-4
ZB665	(pg. 91)	T1350-FL-3
ZN665	(pg. 91)	T1350-FL-3
Z667	(pg. 91)	T1320-FL-4
ZB667	(pg. 91)	T1320-FL-3
ZN667	(pg. 91)	T1320-FL-3
Z668	(pg. 81)	F1760-FL
Z670	(pg. 84)	F1840-42
Z673	(pg. 77)	F1580-FLC-4-5
Z675	(pg. 68)	F1440-5-4
Z676	(pg. 68)	F1440-4
ZB676	(pg. 68)	F1440-1
ZN676	(pg. 68)	F1440-1
Z679	(pg. 79)	F1640
ZB679	(pg. 79)	F1640-1
ZN679	(pg. 79)	F1640-1
Z690	(pg. 66)	F1370-18
Z730	(pg. 53)	F1140C
ZB730	(pg. 53)	F1140C-9-1
ZN730	(pg. 53)	F1140C-9-1
Z742	(pg. 53)	F1140C
Z753	(pg. 286)	BV1290
Z761	(pg. 187)	C1600-M

FLOOR AND AREA DRAIN OPTIONAL VARIATIONS

PREFIXES		SUFFIXES
Z	CI with cast iron top	Std
ZANB	NB body w/ NB top	"X"
ZARB	PB body w/ NB top	"X"
ZB	CI body w/ PB top	-1
ZN	CI body w/ NB top	-1
ZN	CI body w/ SS top	-3
-A	Aux. vent connection	"X"
-AA	Acid resistant epoxy	-11
-AR	Acid resistant epoxy	-11
-B	Backwater valve	-8
-BP	Vandal proof	-6
-BS	SS scr. over dome	-83
-BT	Bell trap bucket	"X"
-C	Membrane clamp	-C
-CI	Cast iron grate	-4
-CP	Chrome plated top	-49
-D	Dome grate	-20
-DB	Bottom dome strainer	-20
-DC	Less Dura-Coated int	"X"
-DF	Deflector grate	Std
-DG	Ductile iron grate	-4
-DP	Decorative polished top	-10
-DS	Ductile iron solid cover	"X"
-DX	Extended wide flange	-Z
-E	1" Top extension	-TE
-EF	3/16" Exterior frame	SPR
-ES	12" Extension section	"X"
-F	Extension frame	A2-XY
-FC	Ext. frame and collar	"X"
-FG	Free set grate	"X"
-FY	Free standing bucket	"X"

"X" Contact MIFAB

-FS	Floating slab	"X"
-G	All galvanized	-13
-GG	Galvanized grate	-12
-GT	Top grate	-16
-H	(Z-504) Hinged grate	-9
-HD	Heavy duty slotted grate	Std
-HL	Hinged locking grate	"X"
-HP	Heel-proof grate	Std
-HT	Square, hinged grate	-9
-IG	Integral grate	-21
-J	Aux. inlet	-J
-J1	1 Aux. inlet 1-1/2" or 2"	-J1
-J2	2 Aux. inlets1-1/2" or 2"	J2
-J3	3 Aux. inlets1-1/2" or 2". -J3	
-J4	4 Aux. inlets1-1/2" or 2". -J4	
-J5	4 Aux. inlets1-1/2" or 2". -J5	
-K	Anchor flange	-FL

FLOOR AND AREA DRAIN OPTIONAL VARIATIONS CON'T

ZURN		MIFAB
-KC	Anch. fl. with memb	Cl.-FLC
-L	Locking device	-6
-LG	Less grate	"X"
-LV	Less backwater valve	"X"
-LY	Less bucket	"X"
-M	Side outlet adaptor	"X"
-NE	Spark proof Non-conductive top	"X"
-OF	6" x 3" x1" funnel	-J
-P	Trap primer tapping	-7
-PD	Promenade deck drain	"X"
-PH	3/8" Dia. Open	Std
-PS	Perforated standpipe	-42
-R	Sump receiver	-41
-RD6	6" Dia. 304 SS top	-6-3
-RD7	7" Dia. 304 SS top	-7-3
-RD8	8" Dia. 304 SS top	-8-3
-RD10	10" Dia. 304 SS top	-10-3
-S	Secondary strainer	-21
-SB	Shallow drain body	"X"
-SC	Solid cover	-25-1
-SC	Secondary clamp collar (Z627)	-C
-SB	Shallow body	"X"
-SD	Longer standpipe	"X"
-SG	Solid gasktd cover	-25-1-G
-SH	Four securing holes	"X"
-SNB	Solid nickel bronze grate	"X"
-SQ6	6" Sq. 304 SS top	S6-3
-SQ8	8" Sq. 304 SS top	S8-3
-SS	SS mesh screen dome	-83
-SSM	SS mesh scr. over dome	"X"
-ST	Solid top	-24
-SW	Spanner wrench	H-1040
-T	Square top	-16
-TG	Tractor grate	Standard
-TS	Top sec. with sl. screws	-6
-U	Extension adapter	-15
-V	Backwater valve	-8
-VP	Vandal proof	-6
-W	Water closure plug	-34
-WB	Water control box	F1660
-WS	Wide slotted grate	"X"
-X	Squeeze in bw valve	-8
-XJ	Expansion joint	R1900
-Y	Sediment bucket	-5
-YA	Aluminum sed. bucket	"X"
-4	4" Diameter funnel	-F4
-90	Side outlet body	-90

Includes "-C" membrane clamp in areas with waterproof membrane. As a recommended alternate, use F1100 in non membrane areas, delete "-C" membrane clamp.

TRENCH DRAINS

ZURN		MIFAB
Z780	(pg. 90)	T1000
Z782	(pg. 90)	T1100-4
Z782-F or -L	(pg. 90)	T1100-F-4
Z784	(pg. 90)	T1200-4-3
ZAB784	(pg. 90)	T1200-4-3
ZANB784	(pg. 90)	T1200-4-3
ZARB784	(pg. 90)	T1200-4-3
Z784-F or -L	(pg. 90)	T1200-F-4-3
ZAB784-F or -L	(pg. 90)	T1200-F-4-3
ZANB784-F or -L	(pg. 90)	T1200-F-4-3
Z792	(pg. 90)	T1200-F-4
ZAB792	(pg. 90)	T1200-F-4-3
ZANB792	(pg. 90)	T1200-F-4-3
ZARB792	(pg. 90)	T1200-F-4-3
Z792-F or -L	(pg. 90)	T1200-F-4
ZAB792-F or -L	(pg. 90)	T1200-F-4-3
ZANB792-F or -LT	(pg. 90)	T1200-F-4-3
Z793	(pg. 90)	T1200-4
Z793-F or -L	(pg. 90)	T1200-F-4

Design and dimensions are subject to modification. Prices do not include applicable taxes. Visit **www.mifab.com** for the most recent product information.
MIFAB®, Inc., 1321 West 119th Street, Chicago, Illinois 60643-5109, USA Toll Free: 1-800-465-2736 • Fax: 1-773-341-3049
All sales subject to MIFAB's® Terms & Warranties. Please refer to inside front cover. sales@mifab.com • Canada Toll Free: 1-800-387-3880

Z794	(pg. 90)	T1200-4
ZAB794	(pg. 90)	T1200-4-3
ZANB794	(pg. 90)	T1200-4-3
ZARB794	(pg. 90)	T1200-4-3
Z794-F or -L	(pg. 90)	T1200-F-4
ZAB794-F or -L	(pg. 90)	T1200-F-4-3
ZANB794-F or -L	(pg. 90)	T1200-F-4-3
Z796	(pg. 90)	T1200-F2
ZF799-75	(pg. 76)	F1570A-4
ZF799-75-AF	(pg. 76)	F1570-4
ZF799-76	(pg. 76)	F1570A-4-SIT
ZF799-76-AF	(pg. 76)	F1570A-4-SIT

TRENCH DRAIN OPTIONAL VARIATIONS

ZURN PREFIXES		MIFAB SUFFIXES
Z	CI grate w/steel frame	-4
ZAB	PB grate and frame	-4-3
ZANB	Pol.NB grate & SS Fr	-4-3
ZARB	Bronze grate & frame	-4-3
-DG	DI slotted grate	Std
-G	Galvanized grate	-13
-HP	Heel proof grate	Std
-LC	CI long. slotted gr	-4
-LD	DI long.slotted gr	-4
-TS	Top sec. w/slot. Screws	-6
-VP	Vandal proof top	-6

TRAPS AND PRIMERS

ZURN		MIFAB
Z1000	(pg. 289)	MI-950
Z1005	(pg. 187)	C1600
Z1012	(pg. 187)	C1600
Z1019	(pg. 289)	MI-950-F
ZAB1019	(pg. 289)	MI-950-F-1
ZANB1019	(pg. 289)	MI-950-F-1
Z1020	(pg. 298)	MI-100
Z1021	(pg. 308)	MI-750
Z1022-XL	(pg. 296)	MI-TSP
Z1022.5SF	(pg. 296)	MI-TSP-1
Z1022.5IP	(pg. 296)	MI-TSP-2
Z1022.5SFU	(pg. 296)	MI-TSP-3
Z1022.5IPU	(pg. 296)	MI-TSP-3
Z1023	(pg. 307)	MI-600-50
Z1024	(pg. 290)	MI-CAG
Z1024-1	(pg. 290)	MI-CAG-10T
Z1024-2	(pg. 290)	MI-CAG-10T
Z1024-3	(pg. 290)	MI-CAG-10T
Z1024-4	(pg. 290)	MI-CAG-15T
Z1024-5	(pg. 290)	MI-CAG-15T
Z1025	(pg. 290)	MI-CAG
Z1025-2	(pg. 290)	MI-CAG-20NH
Z1025-3	(pg. 290)	MI-CAG-30NH
Z1030	(pg. 288)	MI-830
Z1032	.....	"X"
Z1033	(pg. 288)	MI-800
Z1034	(pg. 288)	MI-800
Z1035	(pg. 85)	F1900
Z1035-Q	(pg. 85)	F1910
Z1036	(pg. 85)	F1920
Z1040	(pg. 288)	MI-850
Z1042	(pg. 288)	MI-860
Z1043	(pg. 288)	MI-860

TRAPS AND PRIMERS OPTIONAL VARIATIONS

ZURN		MIFAB
-AR	Acid resistant epoxy	-11
-C	Membrane clamp	-C
-CP	Chrome plated	-49
-DS	Dome strainer	-20
-DU2	2 outlet unit	MI-DU
-DU3	3 outlet unit	MI-DU
-DU4	4 outlet unit	MI-DU
-FC	Adjustable floor CO	Std.
-FL	Flushing connection	-G
-F6	6" funnel	-F6
-G	Galvanized	-13
-LC	Less cleanout & plug	"X"
-P	Trap primer connection	-7
-V	Backwater valve	-8
-3	3/4" female conn	"X"
-3	3/4" T.P. Conn	-3/4"
-7	7" long adapter	"X"

BACKWATER VALVES

ZURN		MIFAB
Z1088	(pg. 287)	BV1300
Z1090	(pg. 284)	BV1000
Z1091	(pg. 286)	BV1280
Z1095	(pg. 284)	BV1000
Z1095-15	(pg. 284)	BV1000
Z1099	(pg. 285)	BV1260

BACKWATER VALVES OPTIONAL VARIATIONS

ZURN		MIFAB
-BC	Bolted cover	Std
-BV	Bronze flapper valve	Std
-G	Galvanized cast iron	-13
-WH	Wheel handle	-WH
-X	Nickel bronze	-1
-12	12" extension	-12
-24	12" extension	-24

"X" Contact MIFAB

GREASE INTERCEPTORS

ZURN		MIFAB
Z1160	(See CLPB)	MCL-G
Z1160-100	(See CLPB)	MCL-G-0
Z1160-200	(See CLPB)	MCL-G-1
Z1160-300	(See CLPB)	MCL-G-2
Z1160-400	(See CLPB)	MCL-G-3
Z1160-500	(See CLPB)	MCL-G-4
Z1160-600	(See CLPB)	MCL-G-5
Z1160-700	(See CLPB)	MCL-G-6
Z1160-800	(See CLPB)	MCL-G-7
Z1165	(pg. 205)	MI-G w/ MI-SOLID
Z1170	(pg. 205)	MI-G
Z1170-100	(pg. 205)	MI-G-0
Z1170-200	(pg. 205)	MI-G-1
Z1170-300	(pg. 205)	MI-G-2
Z1170-400	(pg. 205)	MI-G-3
Z1170-500	(pg. 205)	MI-G-4
Z1170-600	(pg. 205)	MI-G-5
Z1170-700	(pg. 205)	MI-G-6
Z1170-UN	(pg. 201)	MI-G-HLA
Z1170-900	(pg. 206)	XL-MI-G-0
ZS1170	(pg. 207)	MI-G-SS
ZS1170-100	(pg. 207)	MI-G-0-SS
ZS1170-200	(pg. 207)	MI-G-1-SS
ZS1170-300	(pg. 207)	MI-G-2-SS
ZS1170-400	(pg. 207)	MI-G-3-SS
ZS1170-500	(pg. 207)	MI-G-4-SS
ZS1170-600	(pg. 207)	MI-G-5-SS
ZS1170-700	(pg. 207)	MI-G-6-SS
ZS1170-800	(pg. 207)	MI-G-7-SS
ZS1170-900	(pg. 206)	XL-MI-G-0-SS
Z1171	(pg. 205)	MI-G-L
Z1171-500	(pg. 205)	MI-G-L-20
Z1171-700	(pg. 205)	MI-G-L-35
Z1171-800	(pg. 205)	MI-G-L-50
Z1171-TD	(pg. 208)	MI-G-L-SDH
Z1171-TD-500	(pg. 208)	MI-G-L-SDH-20
Z1171-TD-700	(pg. 208)	MI-G-L-SDH-35
Z1171-TD-800	(pg. 208)	MI-G-L-SDH-50
Z1172	(pg. 206)	XL-MI-G
Z1172-900	(pg. 206)	XL-MI-G-O
Z1172-1000	(pg. 206)	XL-MI-G-1
Z1172-1100	(pg. 206)	XL-MI-G-2
Z1172-1200	(pg. 206)	XL-MI-G-3
Z1172-1300	(pg. 206)	XL-MI-G-4
Z1172-1400	(pg. 206)	XL-MI-G-5
Z1172-1500	(pg. 206)	XL-MI-G-6
Z1172-1600	(pg. 206)	XL-MI-G-7
Z1172-1700	(pg. 206)	XL-MI-G-8
Z1172-1800	(pg. 206)	XL-MI-G-8
Z1172-UN	(pg. 206)	XL-MI-G-HLA
Z1173	(pg. 207)	MI-G-SD
Z1173-200	(pg. 207)	MI-G-SD-1
Z1173-300	(pg. 207)	MI-G-SD-2
Z1173-400	(pg. 207)	MI-G-SD-3
Z1173-500	(pg. 207)	MI-G-SD-4
Z1173-600	(pg. 207)	MI-G-SD-5
Z1173-700	(pg. 207)	MI-G-SD-6
Z1173-800	(pg. 207)	MI-G-SD-7
Z1173-900	(pg. 207)	MI-G-SD-8
Z1173-TD	(pg. 208)	MI-G-SDH
Z1173-TD-200	(pg. 208)	MI-G-SDH-1
Z1173-TD-300	(pg. 208)	MI-G-SDH-2
Z1173-TD-400	(pg. 208)	MI-G-SDH-3
Z1173-TD-500	(pg. 208)	MI-G-SDH-4
Z1173-TD-600	(pg. 208)	MI-G-SDH-5
Z1173-TD-700	(pg. 208)	MI-G-SDH-6
Z1173-TD-800	(pg. 208)	MI-G-SDH-7
Z1173-TD-900	(pg. 208)	MI-G-SDH-8
Z1174	(pg. 205)	MI-G-DS w/MI-SOLID
Z1174-100	(pg. 205)	MI-G-O-DS w/MI-SOLID
Z1174-200	(pg. 205)	MI-G-1-DS w/MI-SOLID
Z1174-300	(pg. 205)	MI-G-2-DS w/MI-SOLID
Z1174-400	(pg. 205)	MI-G-3-DS w/MI-SOLID
Z1174-500	(pg. 205)	MI-G-4-DS w/MI-SOLID
Z1174-600	(pg. 205)	MI-G-5-DS w/MI-SOLID
Z1174-700	(pg. 205)	MI-G-6-DS w/MI-SOLID
Z1174-800	(pg. 205)	MI-G-7-DS w/MI-SOLID

GREASE INTERCEPTOR OPTIONAL VARIATIONS

ZURN		MIFAB
-AL	Aluminum cover	-AL
-CC	8" Cleanout cover	-Standard
-DI	Dual high-low inlet	-DI
-E	ARE coated extension	-C
-EP	Enzyme port in cover	-Std
-HD	Heavy duty cover	-HD
-K	Anchor flange	-FL
-KC	Anchor fl. with cl. Collar	-FLM
-L	Angle type flow control	"X"
-R	Recessing receiver	MI-CS/MI-CSD
-RE	Reces. receiver encl. type	MI-CS-EN/MI-CSD-EN
-T	Cover recessed for tile	-TL
-75	Sediment bucket	-SB

SOLID INTERCEPTORS

ZURN		MIFAB
Z1175	(pg. 212)	MI-HAIR
ZAB1175	(pg. 212)	MI-HAIR-2
Z1176	(pg. 212)	MI-HAIR
ZAB1176	(pg. 212)	MI-HAIR-2
Z1180	(pg. 212)	MI-SOLID-S
ZA1180	(pg. 212)	MI-SOLID-S-CP
ZSS1180	(pg. 212)	MI-SOLID-S-SS
Z1181	(pg. 212)	MI-SOLID-L
Z1182	(pg. 213)	MI-SOLID-SA
ZS1182	(pg. 213)	MI-SOLID-SA
Z1183	(pg. 213)	MI-SOLID-TA
Z1183-100	(pg. 213)	MI-SOLID-TA-0
Z1183-200	(pg. 213)	MI-SOLID-TA-1
Z1183-300	(pg. 213)	MI-SOLID-TA-2
Z1183-400	(pg. 213)	MI-SOLID-TA-3
Z1183-500	(pg. 213)	MI-SOLID-TA-4
Z1183-600	(pg. 213)	MI-SOLID-TA-5
Z1183-700	(pg. 213)	MI-SOLID-TA-6
Z1183-800	(pg. 213)	MI-SOLID-TA-7

Z1183-900	(pg. 213)	MI-SOLID-TA-8
Z1183-DF	(pg. 213)	MI-SOLID-TA
Z1183-FC	(pg. 213)	MI-SOLID-TA
Z1183-100	(pg. 213)	MI-SOLID-TA-SS-O
ZS1183-200	(pg. 213)	MI-SOLID-TA-SS-1
ZS1183-300	(pg. 213)	MI-SOLID-TA-SS-2
ZS1183-400	(pg. 213)	MI-SOLID-TA-SS-3
ZS1183-500	(pg. 213)	MI-SOLID-TA-SS-4
ZS1183-600	(pg. 213)	MI-SOLID-TA-SS-5
ZS1183-700	(pg. 213)	MI-SOLID-TA-SS-6
ZS1183-800	(pg. 213)	MI-SOLID-TA-SS-7
ZS1183-900	(pg. 213)	MI-SOLID-TA-SS-8
Z1184	(pg. 212)	MI-SOLID-LB
ZA1184	(pg. 212)	MI-SOLID-LB
Z1185	(pg. 216)	MI-LINT
Z1185-3	(pg. 216)	MI-LINT-1
Z1185-7	(pg. 216)	MI-LINT-3
Z1185-10	(pg. 216)	MI-LINT-4
Z1185-20	(pg. 216)	MI-LINT-6
Z1185-30	(pg. 216)	MI-LINT-7
Z1185-40	(pg. 216)	MI-LINT-8
Z1185-50	(pg. 216)	MI-LINT-9
Z1187-SI	(pg. 212)	MI-OS-DI
Z1188-ST-400	(pg. 211)	MI-O-HU-12
Z1188-ST-450	(pg. 211)	MI-O-HU-13
Z1189	(pg. 212)	MI-OS
Z1189-12	(pg. 212)	MI-OS-1
Z1192	(pg. 218)	MI-G-AD
Z1192-400	(pg. 218)	MI-G-AD-3
Z1192-500	(pg. 218)	MI-G-AD-4
Z1192-600	(pg. 218)	MI-G-AD-5
Z1192-700	(pg. 218)	MI-G-AD-6
Z1194	(pg. 201)	-HLA
Z1199	(pg. 218)	MI-G-AD

SOLID INTERCEPTOR OPTIONAL VARIATIONS

ZURN		MIFAB
-CP	Chrome plated	-CP
-CS	Custom screen	-CS
-RS	Repl. perf. Scr. for buc	-RS
-SS	SS perf. screen	-SSM
-Y	Replacement bucket assembly	-SB
-Y	YR.Replacement SS basket	-SSB

OIL INTERCEPTORS

ZURN		MIFAB
Z1186	(pg. 210)	MI-O
Z1186-300	(pg. 210)	MI-O-A
Z1186-400	(pg. 210)	MI-O-B
Z1186-500	(pg. 210)	MI-O-C
Z1186-600	(pg. 210)	MI-O-1
Z1186-700	(pg. 210)	MI-O-2
Z1186-800	(pg. 210)	MI-O-3
Z1186-ST	(pg. 211)	MI-O-HU
Z1186-ST-300	(pg. 211)	MI-O-HU-A
Z1186-ST-400	(pg. 211)	MI-O-HU-B
Z1186-ST-500	(pg. 211)	MI-O-HU-C
Z1186-ST-600	(pg. 211)	MI-O-HU-1
Z1186-ST-700	(pg. 211)	MI-O-HU-2
Z1186-ST-800	(pg. 211)	MI-O-HU-3
Z1188	(pg. 210)	MI-O
Z1188-75	(pg. 210)	MI-O-4
Z1188-100	(pg. 210)	MI-O-5
Z1188-125	(pg. 210)	MI-O-6
Z1188-150	(pg. 210)	MI-O-7
Z1188-200	(pg. 210)	MI-O-8
Z1188-250	(pg. 210)	MI-O-9
Z1188-300	(pg. 210)	MI-O-10
Z1188-350	(pg. 210)	MI-O-11
Z1188-400	(pg. 210)	MI-O-12
Z1188-450	(pg. 210)	MI-O-13
Z1188-500	(pg. 210)	MI-O-14
Z1188-ST	(pg. 211)	MI-O-HU
Z1188-ST-75	(pg. 211)	MI-O-HU-4
Z1188-ST-100	(pg. 211)	MI-O-HU-5
Z1188-ST-125	(pg. 211)	MI-O-HU-6
Z1188-ST-150	(pg. 211)	MI-O-HU-7
Z1188-ST-200	(pg. 211)	MI-O-HU-8
Z1188-ST-250	(pg. 211)	MI-O-HU-9
Z1188-ST-300	(pg. 211)	MI-O-HU-10
Z1188-ST-350	(pg. 211)	MI-O-HU-11
Z1188-ST-400	(pg. 211)	MI-O-HU-12
Z1188-ST-450	(pg. 211)	MI-O-HU-13
Z1188-ST-500	(pg. 211)	MI-O-HU-14
Z1189	(pg. 212)	MI-OS
Z1189-12	(pg. 212)	MI-OS-1
Z1189-60	(pg. 212)	MI-OS-2
Z1189-100	(pg. 212)	MI-OS-3
Z1189-200	(pg. 212)	MI-OS-4
Z1183-DF	(pg. 213)	MI-SOLID-TA
Z1188-ST-350	(pg. 211)	MI-O-HU-11
Z1188-ST-400	(pg. 211)	MI-O-HU-12
Z1188-ST-450	(pg. 211)	MI-O-HU-13
Z1188-ST-500	(pg. 211)	MI-O-HU-14
Z1189	(pg. 212)	MI-OS
Z1189-12	(pg. 212)	MI-OS-1
Z1192	(pg. 218)	MI-G-AD
Z1192-400	(pg. 218)	MI-G-AD-3
Z1192-500	(pg. 218)	MI-G-AD-4
Z1192-600	(pg. 218)	MI-G-AD-5
Z1192-700	(pg. 218)	MI-G-AD-6
Z1192-800	(pg. 218)	MI-G-AD-7
Z1194	(pg. 201)	-HLA
Z1196	(pg. 220)	MI-E-O
Z1196-300	(pg. 220)	MI-E-O-A
Z1196-400	(pg. 220)	MI-E-O-B
Z1196-500	(pg. 220)	MI-E-O-C
Z1196-600	(pg. 220)	MI-E-O-1
Z1196-700	(pg. 220)	MI-E-O-2
Z1196-800	(pg. 220)	MI-E-O-3
Z1198	(pg. 220)	MI-E-O
Z1198-75	(pg. 220)	MI-E-O-4
Z1198-100	(pg. 220)	MI-E-O-5
Z1198-125	(pg. 220)	MI-E-O-6
Z1198-150	(pg. 220)	MI-E-O-7
Z1198-200	(pg. 220)	MI-E-O-8
Z1198-250	(pg. 220)	MI-E-O-9
Z1198-300	(pg. 220)	MI-E-O-10
Z1198-ST	(pg. 211)	MI-O-HU-HLA
Z1199	(pg. 218)	MI-G-AD

OIL INTERCEPTOR OPTIONAL VARIATIONS

ZURN		MIFAB
-AR	Acid rest. coated finish	Std
-E	Acid res. coated ext	-C
-HD	HD traffic cover	-HD
-HT	Holding tank	-HT
-K+	Anchor flange	-FL
-KC	Anch. flange w/clamp	-FLM
-SI	Solids Interceptor	MI-SOLID
-LS	Less Solids Interceptor	“X”
-RP	Rigid draw off pipe	“X”

SAND INTERCEPTORS

ZURN		MIFAB
Z1187	(pg. 214)	MI-SAND
Z1187-300	(pg. 214)	MI-SAND-1
Z1187-400	(pg. 214)	MI-SAND-2
Z1187-500	(pg. 214)	MI-SAND-3
Z1187-600	(pg. 214)	MI-SAND-4
Z1187-700	(pg. 214)	MI-SAND-5
Z1187-800	(pg. 214)	MI-SAND-6
Z1187-1000	(pg. 214)	MI-SAND-7
Z1187-SI	(pg. 214)	MI-SAND-TA
Z1187-SI-20	(pg. 214)	MI-SAND-TA-1
Z1187-SI-50	(pg. 214)	MI-SAND-TA-2
Z1187-SI-150	(pg. 214)	MI-SAND-TA-3
Z1187-SI-250	(pg. 214)	MI-SAND-TA-4
Z1187-SI-500	(pg. 214)	MI-SAND-TA-5

SAND INTERCEPTORS OPTIONAL VARIATIONS

ZURN		MIFAB
-AR	Acid rest finish	Std
-DG	Ductile iron grate	Std
-E	6” Extension	-C
-HD	HD reinforced cover	-HD
-K	Anchor flange	-FL
-K	Anch. fl. W/clamp	-FLM
-NH	NHinlet and outlet	Std
-VP	Vandal proof screws	-

FIXTURE CARRIERS

ZURN		MIFAB
Z1201-N	(pg. 235)	MC-10
Z1201-HS	(pg. 237)	MC-10-HS
Z1201-N-XB	(pg. 241)	MC-10-HDX
Z1201-N-XH	(pg. 235)	MC-10-HD-750
ZE1201-N	(pg. 239)	MC-10-27-37
ZE1201-H	(pg. 240)	MC-10-27-37-HS
ZF1201-N	(pg. 235)	MC-10
ZN1201-N	(pg. 235)	MC-10
Z1202-N	(pg. 242)	MC-12
Z1202-H	(pg. 243)	MC-12-HS
Z1202-N-XB	(pg. 242)	MC-12-HDX
Z1202-N-XH	(pg. 242)	MC-12-HD-750
ZF1202-N	(pg. 244)	MC-13
ZN1202-N	(pg. 244)	MC-13
Z1203	(pg. 235)	MC-10
Z1203-HD4	(pg. 237)	MC-10D-HS
Z1203-HL4	(pg. 237)	MC-10L-HS
Z1203-HR4	(pg. 237)	MC-10R-HS
Z1203-N-X	(pg. 235)	MC-10
Z1203-ND4	(pg. 235)	MC-10D
Z1203-N-XB	(pg. 241)	MC-10-HDX
Z1203-NL4	(pg. 235)	MC-10L
Z1203-N-XH	(pg. 235)	MC-10-HD-750
Z1203-NR4	(pg. 235)	MC-10R
ZE1203	(pg. 239)	MC-10-27-37
ZE1203-HL4	(pg. 240)	MC-10L-27-37-HS
ZE1203-HR4	(pg. 240)	MC-10R-27-37-HS
ZE1203-HD4	(pg. 240)	MC-10D-27-37-HS
ZE1203-NL4	(pg. 239)	MC-10L-27-37
ZE1203-NR4	(pg. 239)	MC-10R-27-37
ZE1203-ND4	(pg. 239)	MC-10D-27-37
ZF1203-N	(pg. 235)	MC-10
ZN1203-N4	(pg. 235)	MC-10
ZN1203-ND4	(pg. 235)	MC-10D
Z1204	(pg. 242)	MC-12
Z1204-H4	(pg. 243)	MC-12-HS
Z1204-HD4	(pg. 243)	MC-12D-HS
Z1204-1HD4	(pg. 245)	MC-13D-HS
Z1204-1HL4	(pg. 245)	MC-13L-HS
Z1204-1HR4	(pg. 245)	MC-13R-HS
Z1204-2H4	(pg. 245)	MC-13-2-HS
Z1204-2HD4	(pg. 245)	MC-13D-2-HS
Z1204-N4	(pg. 242)	MC-12
Z1204-N-X	(pg. 242)	MC-12
Z1204-ND4	(pg. 242)	MC-12D
Z1204-N-XB	(pg. 242)	MC-12-HDX
Z1204-N-XH	(pg. 242)	MC-12-HD-750
Z1204-1NL4	(pg. 244)	MC-13L
Z1204-1NL43	(pg. 244)	MC-13L-1x3
Z1204-1NR43	(pg. 244)	MC-13R-1x3
Z1204-1NR4	(pg. 244)	MC-13R
Z1204-1ND4	(pg. 244)	MC-13D
Z1204-1ND43	(pg. 244)	MC-13D-1x3
Z1204-2N4	(pg. 244)	MC-13-2
Z1204-2N43	(pg. 244)	MC-13-2-1x3
Z1204-2ND4	(pg. 244)	MC-13D-2
Z1204-2ND43	(pg. 244)	MC-13D-2-1x3
ZF1204-N	(pg. 244)	MC-13
ZN1204-N4	(pg. 244)	MC-13
ZN1204-ND4	(pg. 244)	MC-13D
Z1207	(pg. 236)	MC-10-EXT
Z1207-ND4	(pg. 236)	MC-10D-EXT
Z1207-NL4	(pg. 236)	MC-10L-EXT

Design and dimensions are subject to modification. Prices do not include applicable taxes. Visit **www.mifab.com** for the most recent product information.
MIFAB®, Inc., 1321 West 119th Street, Chicago, Illinois 60643-5109, USA Toll Free: 1-800-465-2736 • Fax: 1-773-341-3049
All sales subject to MIFAB's® Terms & Warranties. Please refer to inside front cover. sales@mifab.com • Canada Toll Free: 1-800-387-3880

Z1207-NR4	(pg. 236)	MC-10R-EXT
Z1208	(pg. 246)	MC-14
Z1208-H42	(pg. 247)	MC-14-4-V2-HS
Z1208-H44	(pg. 247)	MC-14-4-V4-HS
Z1208-N32	(pg. 246)	MC-14-3-V2
Z1208-N42	(pg. 246)	MC-14-4-V2
Z1208-N44	(pg. 246)	MC-14-4-V4
Z1209	(pg. 248)	MC-15
Z1209-ND4	(pg. 248)	MC-15D
Z1209-NL4	(pg. 248)	MC-15L
Z1209-NR5	(pg. 248)	MC-15R
Z1209-HD4	(pg. 249)	MC-15D-HS
Z1209-HL4	(pg. 249)	MC-15L-HS
Z1209-HR4	(pg. 249)	MC-15R-HS
ZN1209-N4	(pg. 248)	MC-15
ZN1209-ND4	(pg. 248)	MC-15D
Z1210	(pg. 230)	Shift and Lift
Z1212	(pg. 250)	MC-21
Z1212-B	(pg. 250)	MC-22
Z1213	(pg. 264)	MC-14-4-PF
Z1214	(pg. 251)	MC-26
Z1215	(pg. 251)	MC-27
Z1216	(pg. 251)	MC-28

WATER CLOSET CARRIER PREFIXES

ZURN		MIFAB
Z	Dura coated system with ZZ coupling	Std
ZQ	Coupling system for cutting to required length after testing	Std

WATER CLOSET CARRIER SUFFIXES

ZURN		MIFAB
A	Aux. support assembly	-10
-AV	2” no hub vent connection	-31
-B	Blowout type fixt. support	Std
-CC	Corrosion resistant 6” long cast iron coupling	-G
-CL	Nipple len. great. than 12”	“X”
-CV	2” NH center vent conn	“X”
-D	Double (back to back)	-D
-F	Floor mtd. outlet cl. Conn	MC-21
-FO	Main fitting only	“X”
-F2	Z-1208 fitting w/ 2” vent	MC-62-4-V2
-F4	Z-1208 fitting w/ 4” vent	MC-62-4-V4
-FX	3” foot ext.assembly	“X”
-G	Galvanized cast iron	-17
-H	Hub & spigot stack conn	-HS
-J	45 degree aux. inlet	-23
-JC	2” Auxiilary inlet	-27
-JJ	Two 2” auxiliary inlets	-31
-JL	2” left hand aux. inlet	-26
-JR	2” right hand aux. inlet	-25
-JS	2” aux. inlet stack side	-23
-JV	2” aux. inlet, vent side	-24
-M	Aux. foot support for P dimension 10” - 18”	-10
-P	3” pl. fitting supporting system	“X”
-PA	Adjustable coupling conn for penal fixture	“X”
-PB	Coupling connection for penal fixture	“X”
-PC	Coupling conn. with 4” cleanout for penal fixtures	“X”
-PN	NH coup. Conn. with 4” cleanout for penal fixtures	“X”
-T	Threaded stack conn	“X”
-VL	Left hand vent connection	“X”
-VP	Vandal proof trim	-14
-W	Adap. ass. for women’s ur	-15
-XH	Extra HD, 500lb carrier	-HD
-X3	3” extension	“X”
-X4	4” extension	Specify
Y	Foot support system	-10
-W	Adap. ass.for womans ur	-15
-XH	Extra HD, 500lb carrier	-HD
-X4	4”extension	“X
-Y	Food support system	-10
-29	Mechanical test cap ass	-13
-45	Fin. Fr. -siphon jet closet	-1
-45B	Finishing fr. - blowout clos	-1
-50	Flush valve supply support	-20
-57	4” neo-seal clos. gask. Kit	-O1
-60	Wrench for vp screws	“X”
-61	Adj. wrench for ZZ coup	-19
-74	Bowl saver washer	“X”
-79	Parapelligic rough-in	“X”

LAVATORY, URINAL AND SINK CARRIERS

ZURN		MIFAB
Z1217	(pg. 264)	MC-62-4-V2
Z1218	(pg. 264)	MC-61-T
ZX1220-BM3	(pg. 264)	MC-62-3-V2
ZX1220-BM4	(pg. 264)	MC-62-4-V2
Z1221	(pg. 252)	MC-31
Z1221-D	(pg. 252)	MC-31D
Z1222	(pg. 252)	MC-32
Z1222-D	(pg. 252)	MC-32D
Z1223	(pg. 253)	MC-33
Z1224	(pg. 252)	MC-31
Z1224-D	(pg. 252)	MC-31D
Z1225	(pg. 252)	MC-32
Z1225-BL	(pg. 253)	MC-33
Z1225-D	(pg. 252)	MC-32D
Z1229	(pg. 253)	MC-34
Z1231	(pg. 256)	MC-41
Z1231-EZ	(pg. 258)	MC-41-TR
Z1231-D	(pg. 257)	MC-41D
Z1231-EZR	(pg. 258)	MC-41-TR
Z1231-EZ-D	(pg. 258)	MC-41D-TR
Z1231-EZR-D	(pg. 258)	MC-41D-TR
Z1236	(pg. 255)	MC-40
Z1236-D	(pg. 255)	MC-40D
Z1251	(pg. 263)	MC-54
Z1253	(pg. 262)	MC-53
Z1254	(pg. 261)	MC-51
Z1255	(pg. 263)	MC-55
Z1256	(pg. 264)	MC-56
Z1257	(pg. 264)	MC-56-LP
Z1258	(pg. 264)	MC-56
Z1259	(pg. 254)	MC-36
Z1259-BP	(pg. 254)	MC-37
Z1259-D	(pg. 254)	MC-38D
Z1259-DB	(pg. 254)	MC-39D
Z1259-SP	(pg. 254)	MC-39D
Z1259-2	(pg. 254)	MC-36-2

LAVATORY, URINAL AND SINK CARRIERS OPTIONAL VARIATIONS

ZURN PREFIX		SUFFIX
Z	Dura coated cast iron	Std.

ZURN		MIFAB
-AL	Adaptor lug	-88
-B	Blow out fixture support	Std.
-BL	Bi-Livel cooler support	MC-33
-BP	Bottom body plate with bearing jacks	Std.
-BR	Bracket support valve plate	-H
-BS	Bar support valve plate	-F
-CC	Cast iron support up to 7”	-CI
-CL	Cast iron coupling over 7”	“X”
-CU	Floor to ceiling upright	-B
-D	Back to back system	-D
-DB	Back to back top & bottom plates with bearing jacks	Std.
-E2	Chrome plated concealed arm escutceons 2” long	-E2
-E4	Chrome plated & conc Arm escutchems 4” long	-E4
-E6	Chrome plated & concealed arm escutcheons 6” long	-E6
-F2	Z1208 fitting with 2” vent	Std.
-F4	Z1208 fitting with 4” vent	Std.
-FP	Top, front, back plate	Std.
-G	Galvanized	-17
-L	Stud or sleeve length - greater than standard	“X”
L2	Less bearing plate ass	“X”
-SL	Stud length over 6”	-A
-VP	Vandal proof trim	-14
-WS	Wall support valve plate	-G
-W6	6” wide support plate	“X”
-XH	Extra HD 500 lb carrier	-HD
-X3	3” extension	“X”
-X4	4” extension	“X”
-Y	Foot support system	-10
-ZR	Tubular sup. for long studs	-R
-1	Longer than standard urinal / sink lavatory	-W
-2	Bearing plate assembly	Std.
-5	Corner lavatory support	-C
-6	Cast Iron coupling up to 6”	-CI
-29	Mechanical test cap	-13
-58	Flush valve sup. for urinals	-20
-79	Paraplegic Rough-in	-WC

RESIDENTIAL WATER CLOSET SUPPORT SYSTEM

ZURN		MIFAB
Z1280	(pg. 250)	MC-24
Z1280-N3-2	(pg. 250)	MC-24
Z1280-N4-2	(pg. 250)	MC-24
Z1280-N4	(pg. 250)	MC-24
Z1282-H4	(pg. 250)	MC-24
Z1282-H4-2	(pg. 250)	MC-24
Z1282-HD-4	(pg. 250)	MC-24
Z1283-P3	(pg. 250)	MC-24
Z1284-N4	(pg. 250)	MC-21N
Z1285	(pg. 250)	MC-24

RESIDENTIAL WATER CLOSET OPTIONAL VARIATIONS

PREFIXES		SUFFIXES
-Z	dura coated plate sys	Std.

ZURN		MIFAB
-CL	Coup. len. Great. than 4”	”X”
-HT	Hangar type clos. adp	“X”
-X4	4” foot extension	“X”
-Y	Foot support system	-10

HYDRANTS

ZURN		MIFAB
Z1300	(pg. 274)	MHY-20
Z1305	(pg. 274)	MHY-25
Z1310	(pg. 274)	MHY-10
Z1315	(pg. 274)	MHY-15
Z1320	(pg. 274)	MHY-26
Z1320-C	(pg. 274)	MHY-26
Z1320-EZ	(pg. 278)	MHY-26-RECT
Z1321	(pg. 274)	MHY-16
Z1322-EZ	(pg. 274)	MHY-26-RB
Z1322	(See CLPB)	HY-2000
Z1325	(pg. 276)	MHY-45
Z1327	(pg. 276)	MHY-45
Z1327	(pg. 276)	MHY-45
Z1330	(pg. 276)	MHY-35
Z1332-EZ	(pg. 275)	MHY-35-RB
Z1333	(pg. 275)	MHY-30
Z1333-C-BFP	(pg. 275)	MHY-30-DVB
Z1334-C	(pg. 275)	MHY-30
Z1334-C-BFP	(pg. 275)	MHY-30-DVB
Z1335	(pg. 275)	MHY-35
Z1341	(pg. 282)	MHY-90
Z1341-BFP	(pg. 282)	MHY-90-DVB
Z1342	(pg. 283)	MHY-95
Z1342-BFP	(pg. 283)	MHY-95-DVB
Z1344	(See CLPB)	HY-1000
Z1345	(See CLPB)	HY-1000
Z1346	(See CLPB)	HY-1000

Z1347-BFP	(See CLPB)	HY-1000
Z1349	(pg. 277)	MHY-50
Z1350	(pg. 277)	MHY-55
Z1350-EZ	(pg. 277)	MHY-55-RB
Z1360	(pg. 280)	MHY-60
Z1361	(pg. 280)	MHY-60
Z1365	(pg. 280)	MHY-61
Z1370	(pg. 280)	MHY-60-HSB
Z1375	(pg. 280)	MHY-60
Z1385	(pg. 281)	MHY-65
Z1388	(pg. 279)	MHY-58
Z1390	(pg. 281)	MHY-66
Z1395	(pg. 281)	MHY-68
Z1397	(pg. 281)	MHY-68

HYDRANT OPTIONAL VARIATIONS

ZURN		MIFAB
-AC	Al. casing guard	-42
-AN	Angled hose conn	"X"
-BC	Bronze casing	Std.
-C	Cast iron box	-50
-CL	Cylinder key lock	-K
-DP1	1/2" Drain port in box	-9
-DP14	1/4" Drain port in box	-10
-DP38	3/8" Drain port in box	-11
-DU	Comb. 3/4" female and 1". male pipe thread conn.	"X"
-HD	Heavy duty cover	"X"
-K	Anchor Flange	-FL
-KC	Anchor Flange with clamp.	-FLM
-LK	Loose key	MHY-9004
-NB	Polished NB box	-1
-PB	Polished bronze box	-1
-PL	Plain rough bronze box	-7
-PX	1/2" pex tubing connection	-PX
-RC	Rough chrome finish	-49
-RK	Hydrant parts repair kitMHY	-CIA
-SB	Statuary bronze face	-1
-SBD	Stat. Br. face - dark finish	-1
-SBL	Stat. Br. face - light finish	-1
-SBM	Stat. Br. face - med. finish	-1
-SS	SS box and cover	-3
-VB	3/4" adaptor vb	Std.
-WC	Wall clamp	-WC
-WH	Wheel handle	MHY-9002
-WR	Water cast onto cover	"X"
-1"	1" hose connection	-O
-1	3/4" IP str.Fem. Inl. adap	"X"
-3	3/4" solder fem. inlet adap	-5
-4	Wall clamp	-WC
-5	3/4" adaptor with vb	-8
-6	Less polished bronze face"X"	
-7	Plain bronze box	-1
-8	Less dura coated CI box	-50
-10	Polished NB box	-1
-11	Statuary bronze face	-1
-12	Cylinder key lock	-K
-13	3/4" IP 90 degree inlet elbow with union nut	-6
-15	SS box and cover	-3
-17	1/4" drain port in box	-9
-18	Wheel handle	MHY-9002
-20	Aluminum casing guard	-42
-21	3/8" drain port in box	-10
-22	1/2" drain port in box	-11
-34EL	3/4" 90 deg. solder inl	Elb.Std
-34FIP	3/4" Fem. pipe thr. Conn	"X"
-34FS	3/4" Fem. solder inl. Conn	Std.
-34MIP3/4"	male pipe thr. conn	"X"
-34UN	3/4" IP 90 deg. inlet elbow	-6

CLEANOUTS

ZURN		MIFAB
Z1400	(pg. 168)	C1100-R
Z1400-K	(pg. 168)	C1100-R
ZN1400	(pg. 168)	C1100-R-1
Z1400-BZ	(pg. 168)	C1100-R
Z1400-SZ	(pg. 170)	C1100-S
Z1402	(pg. 176)	C1230
ZB1402	(pg. 176)	C1230-1
ZN1402	(pg. 176)	C1230-1
Z1404	(See CLPB)	C230-TS-1
ZB1404	(See CLPB)	C230-TS-1
ZN1404	(See CLPB)	C230-TS-1
Z1406	(pg. 172)	C1100-XR
ZB1406	(pg. 172)	C1100-XR-1
ZN1406	(pg. 172)	C1100-XR-1
Z1440	(pg. 182)	C1450
Z1441	(pg. 183)	C1450-RD
ZB1441	(pg. 183)	C1450-RD
Z1443	(pg. 183)	C1450-S
ZB1443	(pg. 183)	C1450-S
ZN1443	(pg. 183)	C1450-S
Z1444	(pg. 182)	C1450-R
ZN1444	(pg. 182)	C1450-R-1
Z1445	(pg. 184)	C1460
Z1446	(pg. 185)	C1460-RD
ZB1446	(pg. 185)	C1460-RD
Z1447	(pg. 185)	C1460-S
ZB1447	(pg. 185)	C1460-S
ZN1447	(pg. 185)	C1460-S
Z1448	(pg. 184)	C1460 w/C1300-R
ZB1448	(pg. 184)	C1460 w/C1300-R-1
ZN1448	(pg. 184)	C1460 w/C1300-R-1
Z1449	(pg. 176)	C1230
Z1454	(pg. 168)	C1100-C-R*
ZB1454	(pg. 168)	C1100-C-R-1*
ZN1454	(pg. 168)	C1100-C-R-1*
Z1455	(pg. 168)	C1100-C-R-Z*
ZB1455	(pg. 168)	C1100-C-R-1*
ZN1455	(pg. 168)	C1100-C-R-1*
Z1456	(pg. 187)	C1500
ZAB1456	(pg. 187)	C1500-1
ZANB1456	(pg. 187)	C1500-1
Z1457	(pg. 177)	C1310
ZAB1457	(pg. 177)	C1310
ZANB1457	(pg. 177)	C1310
Z1460	(pg. 178)	C1400-S
ZAB1460	(pg. 178)	C1400-S-1
ZANB1460	(pg. 178)	C1400-S-1
Z1461	(pg. 178)	C1400-S
ZAB1461	(pg. 178)	C1400-S-1
ZANB1461	(pg. 178)	C1400-S-1
Z1462	(pg. 178)	C1400-S
ZAB1462	(pg. 178)	C1400-S-1
ZANB1462	(pg. 178)	C1400-S-1
Z1463	(pg. 177)	C1300-R
ZAB1463	(pg. 177)	C1300-R-1
ZANB1463	(pg. 177)	C1300-R-1
Z1464	(pg. 80)	F1670
ZS1464	(pg. 80)	F1670
ZS1467	(pg. 188)	MI-VB
Z1468	(pg. 179)	C1430-RD
ZAB1468	(pg. 179)	C1430-RD
ZS1468	(pg. 179)	C1430-RD
Z1469	(pg. 179)	C1400-RD
ZSS1469	(pg. 179)	C1400-RD
ZAB1469	(pg. 179)	C1400-RD
ZS1469	(pg. 179)	C1400-RD
Z1470	(pg. 179)	C1430
ZARB1470	(pg. 179)	C1430
Z1471	(pg. 290)	MI-GRILL
ZAB1471	(pg. 290)	MI-GRILL
ZANB1471	(pg. 290)	MI-GRILL
Z1472	(pg. 290)	MI-GRILL
ZAB1472	(pg. 290)	MI-GRILL
ZANB1472	(pg. 290)	MI-GRILL
Z1473	(pg. 155)	R1930
Z1474	(pg. 178)	C1300-MF
ZB1474	(pg. 178)	C1300-MF-3
ZN1474	(pg. 178)	C1300-MF-3
Z1602	(pg. 168)	C1100-R
ZN1602	(pg. 168)	C1100-R-1
ZXN1612	(pg. 172)	C1100-XR-1
Z1615	(pg. 182)	C1450
Z1616	(pg. 182)	C1450
Z1666	(pg. 180)	C1440
Z1666-1	(pg. 181)	C1440-RD

CLEANOUT OPTIONAL VARIATIONS

PREFIXES

-N	W/ internal cleanout	C1230
Z	Cast iron body and top	-4
ZB	Polished bronze top	-1
ZN	Nickel bronze top	-1
ZS	304 stainless steel top	-3
ZAB	Polished bronze top	-1
ZANB	Nickel bronze top	-1

SUFFIXES

-A	Raised head plug	-A
-AR	Acid resistant epoxy	-11
-BP	Bronze plug	-34B
-C	Membrane clamp	-C
-CF	Carpet flange cover	-RFC
-CH	Cleanout Acc. Housing	"X"
-CM	Carpet marker	-RC
-CP	Chrome plated	-49
-DC	Ductile iron	-4
-DX	Extended wide flange	-Z
-G	All galvanized	-13
-HC	Hinged cover	"X"
-HD	Heavy duty top	-X
-HH	Handle hole	"X"
-IC	Inside caulk connection	X
-IN	Internal cleanout	"X"
-K	Anchor flange	-FL
-KC	Anchor fl. and clamp	-FLC
-LC	Less pipe clamp with mounting holes in flange	"X"
-LM	Less internal mixing valve assembly	-LM
-NH	No hub outlet	Std.
-NL	Push on outlet	P
-PW	Plug wrench	"X"
-SC	Scoriated cover	Std.
-SG	Gasketed cover	Std.
-SL	Longer screw	-87
-SM	Special marking stampedon top	-95
-ST	Smooth top	"X"
-SW	Spanner wrench	H-1040
-T	Square top	-T
-TX	Square top recessed for tile	-TS
-VP	Vandal proof	-6
-X	Round top recessed for tile	-T
-Z	Round top recessed for	-UR

"X" Contact MIFAB

WATER HAMMER ARRESTORS

ZURN		MIFAB
Z1700	(pg. 314)	WHB
Z1700-100	(pg. 314)	WHB-A
Z1700-200	(pg. 314)	WHB-B
Z1700-300	(pg. 314)	WHB-C
Z1700-400	(pg. 314)	WHB-D
Z1700-500	(pg. 314)	WHB-E
Z1700-600	(pg. 314)	WHB-F
Z1705	(pg. 314)	MWH
Z1705-A	(pg. 313)	MWH-A
Z1705-B	(pg. 313)	MWH-B
Z1705-C	(pg. 313)	MWH-C
Z1705-D	(pg. 313)	MWH-D
Z1705-E	(pg. 313)	MWH-E
Z1705-F	(pg. 313)	MWH-F

Design and dimensions are subject to modification. Prices do not include applicable taxes. Visit **www.mifab.com** for the most recent product information.
MIFAB®, Inc., 1321 West 119th Street, Chicago, Illinois 60643-5109, USA Toll Free: 1-800-465-2736 • Fax: 1-773-341-3049
All sales subject to MIFAB's® Terms & Warranties. Please refer to inside front cover. sales@mifab.com • Canada Toll Free: 1-800-387-3880

STAINLESS STEEL DRAINS

ZURN		MIFAB
Z1715	(pg. 127)	R1200-28-M
ZC1715	(pg. 127)	R1200-28-M
ZM1715	(pg. 127)	R1200-29-M
Z1717	(pg. 148)	R1300T-28
Z1719	(pg. 47)	F1000-8-3-28-Z
Z1720	(pg. 84)	F1880
Z1721	(pg. 84)	F1890
Z1723	(pg. 50)	RS48-3-28-NH
Z1724	(pg. 50)	F-3
Z1724-4	(pg. 50)	F4-3
Z1724-6	(pg. 50)	F6-3
ZC1724-4	(pg. 50)	F4-3
ZC1724-6	(pg. 50)	F6-3
ZM1724	(pg. 50)	F-3-29
Z1725	(pg. 50)	G-3
ZC1725	(pg. 50)	G-3
ZM1725	(pg. 50)	G-3-29
Z1726	(pg. 37)	F1000-3-28
ZC1726	(pg. 37)	F1000-3-28
ZM1726	(pg. 37)	F1000-3-29
Z1727	(pg. 37)	F1000-S-3-28
ZC1727	(pg. 37)	F1000-S-3-28
ZM1727	(pg. 37)	F1000-S-3-29
Z1730	(pg. 37)	F1000-8-3-28
ZC1730	(pg. 37)	F1000-8-3-28
ZM1730	(pg. 37)	F1000-8-3-29
Z1731	(pg. 37)	F1000-8-3-28
ZC1731	(pg. 37)	F1000-8-3-28
ZM1731	(pg. 37)	F1000-8-3-29
Z1732	(pg. 37)	F1000-8-3-28
ZC1732	(pg. 37)	F1000-8-3-28
ZM1732	(pg. 37)	F1000-8-3-29
Z1735	(pg. 60)	F1340-28-3
ZC1735	(pg. 60)	F1340-28-3
ZM1735	(pg. 60)	F1340-29-3
Z1736	(pg. 60)	F1340-28-3
ZC1736	(pg. 60)	F1340-28-3
ZM1736	(pg. 60)	F1340-29-3
Z1737 to Z1740	.....	"X"
Z1745	(pg. 171)	C1000-T6-3-28

"X" Contact MIFAB

STAINLESS STEEL DRAIN OPTIONAL VARIATIONS

ZURN		MIFAB
PREFIXES		
Z	Type 304 SS	-28
ZC	Type A-27 carbon steel	"X"
ZM	Type 316 SS	-29
SUFFIXES		
-C	Galv. deck clamp	-C-13
-BW	Butt welded	"X"
-D	Dome grate	-20
-DB	SS dome strainer	-20-28
-DP	Roof deck plate	-BDP
-DX	Extended wide flange	-Z
-E	Galv. extension	-15-13
-FG	Flush grate	Std.
-HD	XHD top frame and grate	"X"
-HP	Heel proof grate	Std.
-IP	Female threaded outlet	T
-J	Auxiliary inlet	"X"
-K	Anchor flange	-FL
-KC	Anchor fl. with clamp	-FLC
-P	1/2" Trap primer conn	-7
-R	Galv.sump receiver	-B-13
-RD5	6" dia. stainless steel top	-5-3
-RD7	7" dia. stainless steel top	-7-3
-RD8	8" dia. stainless steel top	-8-3
-RD10	10" dia. stainless steel top	-10-3
-SQ5	5" square stainless steel top	-S5-3
-SQ8	8" square stainless steel top	-S8-3
-SC	Solid secured cover	"X"
-SF	Satin finish top	"X"
-SG	Solid gasketed cover	"X"
-SP	SS cleanout plug	-34-28
-TS	Top secured with slotted screws	-6
-V	Bronze backwater valve	"X"
-VP	Vandal proof	-6
-Y	SS Sediment bucket	-5-28
-YM	Fabricated mesh bucket	"X"
-30	Bronze closure plug	-34B
-31	Plastic closure plug	-34
-33	Type 304 SS plug	-34-28
-34	Bronze closure plug with 3/4" test plug	"X"
-90	90 degree side outlet	-90

FLOOR SINKS

ZURN		MIFAB
Z1749	(pg. 106)	FS1910-FL
ZM1749	(pg. 106)	FS1910-FL-29
Z1750	(pg. 106)	FS1920-FL
ZM1750	(pg. 106)	FS1920-FL-29
Z1751	(pg. 106)	FS1930-FL
ZM1751	(pg. 106)	FS1930-FL-29
Z1752	(pg. 106)	FS1940-FL
ZM1752	(pg. 106)	FS1940-FL-29
Z1753	(pg. 106)	FS1920-FL-SC
ZS1762	(See TDSS)	P5000
Z1762	(See TDSS)	P5000
Z1763	(See TDSS)	P5000
ZS1763	(See TDSS)	P5000
Z1755	(pg. 106)	FS1920-FL
Z1761	(See TDSS)	P5000
Z1800-6B	(See TDSS)	P3060
Z1800-8B	(See TDSS)	P3080
Z1800-8S	(See TDSS)	P2080-PD
Z1800-12B	(See TDSS)	P3020-PD
Z1800-12S	(See TDSS)	P3120
Z1810-6B	(See TDSS)	P3060-P
Z1810-8B	(See TDSS)	P3080-PD
Z1810-8S	(See TDSS)	P2080-PD
Z1810-12B	(See TDSS)	P3020-PD
Z1810-12S	(See TDSS)	P3120
Z1820-8B	(See TDSS)	P3080-PD-SO
Z1820-8S	(See TDSS)	P2080-PD-SO
Z1820-12B	(See TDSS)	P3020-PD-SO
Z1820-12S	(See TDSS)	P3120-SO
Z1830-8B	(See TDSS)	P3080
Z1830-8S	(See TDSS)	P2080-PD
Z1830-12B	(See TDSS)	P3020-PD
Z1830-12S	(See TDSS)	P3120
Z1840-6B	(See TDSS)	P7060
Z1840-6S	(See TDSS)	P7060-S
Z1840-8B	(See TDSS)	P7080
Z1840-8S	(See TDSS)	P7080-S
Z1900	(pg. 99)	FS1720
ZN1900	(pg. 99)	FS1720-1
Z1900-RL	(pg. 108)	FS1980
Z1901-RL	(pg. 108)	FS1990
Z1902-RL	(pg. 108)	FS2000
Z1903	(pg. 107)	FS1960
Z1901	(pg. 100)	FS1730
ZN1901	(pg. 100)	FS1730-1
Z1902	(pg. 101)	FS1740
ZN1902	(pg. 101)	FS1740-1
Z1910	(pg. 97)	FS1520
ZN1910	(pg. 97)	FS1520-1
Z1910-RL	(pg. 108)	FS1970
Z1920	(pg. 104)	FS1770
Z1926	(pg. 104)	FS1770-FL
Z1930	(pg. 98)	FS1530
ZN1930	(pg. 98)	FS1530-1
Z1940	.....	"X"
Z1950	(pg. 103)	FS1760
ZN1950	(pg. 103)	FS1760-1
Z1960	(pg. 102)	FS1750
ZN1960	(pg. 102)	FS1750-1
Z1970	(pg. 107)	FS1950
ZA1970	(pg. 107)	FS1950
Z1982	(pg. 64)	F1350-Y-36-3
Z1995	(pg. 105)	FS1790
ZN1995	(pg. 105)	FS1790-1

FLOOR SINK OPTIONAL VARIATIONS

ZURN		MIFAB
PREFIXES		
Z	Type 304 Stainless steel	-28
Z	CI body, A.R.E. Interior	"X"
ZM	Type 316 Stainless steel	-29
SUFFIXES		
-C	Membrane clamp	-C
-DX	Dexotex flange	-Z
-HD	Extra heavy duty grate	"X"
-HP	Heel proof grate	"X"
-IP	Female threaded outlet	T
-K	Anchor flange	-FL
-KC	Anchor flange with clamp-FLC	
-LBT	Less bell trap	"X"
-LD	Less dome botom strainer	"X"
-LS	Less secondary strainer	"X"
-LY	Less sediment bucket	"X"
-P	1/2" Trap primer conn	-7
-S	Secondary strainer	"X"
-SR	1/2" thick sanitary rim	"X"
-T	Square frame + round gr	"X"
-VP	Vandal proof	-6
-Y	Sediment bucket	-5
-YS	Suspended sediment buck	"X"
-1	Less grate	-22
-2	1/2 grate	-150
-3	3/4 grate	-175
-4	Full grate with center open	"X"
-5	Grate with 4" funnel	-F4
-6	Grate with 6" funnel	-F6
-7	Grate with 6"x3"x1" funn	-J
-8	Grate with 4"x 9" funnel	-G
-9	Angle frame and grate	"X"
-11	Vandal proof	-6
-12	Depressed alum. Grate	"X"
-15	Solid cover	"X"
-16	1/2 solid cover	"X"
-17	3/4 solid cover	"X"
-18	Solid cover with center op	"X"
-19	Full hinged grate	-9
-23	Aluminum bucket	Std.
-25	White A.R.E. bucket	"X"
-31	SS mesh liner for bucket	"X"
-32	Aluminum dome strainer	Std.
-33	White A.R.E. anti-splash Bottom dome strainer	"X"
-34	N.B. anti-splash bottom dome strainer	"X"

"X" Contact MIFAB

MIFAB SUFFIX LISTING

SUFFIX	DESCRIPTION
01	Neoprene bowl gasket (MC-10-PBG)
-1	Nickel bronze (drains and cleanouts)
-1	Tiling frame (carriers) (MC-10-1-PTFK)
-2	Polished brass
-3	Stainless steel (Type 304) (drains)
-3	Rear anchor support (carriers)
-4	Ductile iron
-5	Sediment bucket
-5	3/4” female solder adapter (hydrants)
-6	Security screws (floor and area drains, cleanouts)
-6	Vandal proof dome (roof drains)(H-1029)
-6	3/4” IPS 90 degree elbow and union nut (hydrants)
-7	Trap seal primer tapping
-8	Backwater valve (drains)(BV1250 Series)
-8	3/4” adapter vacuum breaker (hydrants) (HY-9005-CP)
-9	Hinged grate (drains)
-9	1/4” drain port in box (hydrants)
-10	Decorative polished top (10 piece minimum) (drains)
-10	Auxiliary support (carriers) (MC-10-AFS)
-10	3/8” drain port in box (hydrants)
-11	Acid resistant epoxy coating
-11	1/2” drain port in box (hydrants)
-11B	Grate painted black
-12	Galvanized metal dome (roof drains)
-12	Galvanized grate and frame (floor and area drains) (MC-10-PN12-31)
-12	12” tapered thread ABS nipple (carriers)
-12	Wheel handle (hydrants) (HY-9003)
-12A	Galvanized body and membrane clamp (roof drains)
-13	Galvanized body (floor and area drains)
-13	Galvanized body, membrane clamp and dome (roof drains)
-13	Test plug for custom and cast iron nipples (carriers)
-14	Flat strainer (drains)
-14	Vandal proof finish trim (carriers) (MC-10-PFH-14)
-15	Extension
-16	Square top assembly
-17	with trap and cleanout (MI-OS Series)
-17	All galvanized (carriers)
-18	with trap and oil cone and cleanout (MI-OS Series)
-19	Nipple wrench (carriers) (MC-10-PCW)
-20	Secondary dome strainer (drains) (FD-9600 Series)
-20	Flush valve support (carriers) (MC-10-FVS)
-21	Secondary flat stainless steel strainer (2”, 3”, 4”) (FD-9600 Series)
-22	Less grate (drains)
-22	Less fitting (carriers)
-23	Chained grate (drains)
-23	45 degree auxiliary inlet (MC-28)
-24	Solid secured cover
-25	2” auxiliary inlet, right side
-26	2” auxiliary inlet, left side
-25-	1 Solid secured hinged nickel bronze cover
-26	Locking device (Same as -6)
-27	Rough bronze dome with stainless steel mesh screen
-28	Stainless steel body (Type 304)
-29	Stainless steel body (Type 316)
-30	PVC socket connection body (2”, 3”, 4”)
-31	ABS socket connection body (2”, 3”, 4”)
-31	Two 2” auxiliary inlets (carriers)
-32	Integral deep seal trap (2”, 3”, 4”) (MI-950 Series)
-32	No hub nipple with 4” cleanout for penal fixtures (MC-28)
-32	Foot pedal mounting plate (carriers)
-33	Less flange, deduct
-34	Closure plug (C1440 Series)
-34B	Brass closure plug (A4-34B)
-35	Stainless steel mesh over bucket
-38	Solids retaining baffle
-40	Underdeck clamp (drains)
-40	1” brass casing (hydrants)
-41	Sump receiver (drains)
-41	3/8” brass operating rod (hydrants)
-42	Perforated standpipe (drains)
-42	Decorative casing guard (hydrants)
-43	Solid standpipe
-44	2” no hub side inlet (specify location)
-44T	1 1/2” no hub side inlet (specify location)
-49	Chrome plated
-50	Cast iron
-51	2 1/2” round center grate opening (floor sinks)
-69	Stainless steel sediment bucket (F1000 and F1100 Series
-79	Standpipe over 8”, per inch
-80	Low profile aluminum dome
-81	Rough bronze dome
-83	Stainless steel mesh screen over dome
-87	Screw longer than 3 1/2”, per inch
-90	Threaded side outlet (2”, 3”, 4”)
-90NH	No hub side outlet (2”, 3”, 4”)
-91	Stainless steel standpipe (W-3)
-95	Client logo
-150	Half grate (floor sinks)
-175	Three quarter grate (floor sinks)
-A	Loose set grate (drains)
-A	Stud length over 8” (specify), Add per inch (carriers)
-AH8 8”	ABS nipple with adjustable horn (MH-10-PN8AH-31)
-AH12	12” ABS nipple with adjustable horn (MH-10-PN12AH-31)
-B	Sump receiver (drains)
-B	Floor to ceiling uprights (carriers)
-B	Cast brass box (hydrants)
-B	Integral bottom plate (backwater valves)
-B-49	Chrome plated brass box (hydrants)
-BK	Cast brass box with cylinder key lock (hydrants)
-BK-49	Chrome plated brass box with cylinder key lock (hydrants)
-C	Membrane clamp (floor and area drains)
-C	Secondary clamp (roof drains)
-C	Extension (interceptors)
-CI-4 4”	rolling thread cast iron nipple (MC-10-PN4R-50)
-CI-6 6”	rolling thread cast iron nipple
-CI-8 8”	rolling thread cast iron nipple
-CI-12 12”	rolling thread cast iron nipple
-CI-24 24”	rolling thread cast iron nipple
-C1	Low profile membrane clamp
-CP	Chrome plated (interceptors)
-E	Adjustable extension
-EB	External strainer basket assembly (interceptors)
-EG	Galvanized adjustable extension
-E2	2” chrome plated escutcheons (pair)
-F	Bar support valve plate (carriers)
-F1, -F2, -F3	Accuflow parabolic weir
-F4 4”	diameter funnel
-F6 6”	diameter funnel
-FL	Anchor flange
-FLC	Anchor flange with membrane clamp
-G 4” x 9”	funnel (floor and area drains)
-G	Ballast guard (roof drains)
-G	Trap with flushing connection (F1660 Series)
-G	Wall support valve plate (carriers)
-GS	Grounding strap
-HC	Adjustable ballast guard with secondary clamp
-HD	Heavy duty re-enforced lid (interceptors)
-HD	500 lb. Rated heavy duty (carriers)
-HD-750	750 lb. Rated heavy duty (carriers)
-HDX	1000 lb. Rated extra heavy duty (carriers)
-HM-2RB	High dome, rough bronze
-HM-PB	High dome, polished bronze
-HM-NB	High dome, nickel bronze
-HSB	Hose storage box (hydrants)
-HT	Holding tank (interceptors)
-I 3/8”	threaded eye bolts for cast iron lavatories (carriers)
-J 6” x 3” x 1”	funnel
-JC	Ballast guard with secondary clamp
-K	Cylinder key lock
-M	Less anchor flange
-MHY-CIA-18-A	HY-1000 hydrant repair kit
-M-80	Low profile aluminum dome
NH	No hub outlets
-O	1” hose connection
-OR8	8” rolling thread ABS nipple
-OR12	12” rolling thread ABS nipple
P	Push on outlet
-PD	Polydome
-PF	Prefabricated carrier bank, per carrier
-R	2” external water dam
-RB	Replacement bucket (interceptors)
-RB	Round box (hydrants)
-RSSB	Replacement stainless steel baffle (interceptors)
S	End side outlet (T1320 and T1350 Series)
-S	1” x 1/4” slots (includes 4 mounting brackets) (hydrants)
-SB	Sediment bucket (interceptors)
-SS	Stainless steel (interceptors)
-SSB	Replacement stainless steel sediment bucket (interceptors)
-SSM	Stainless steel mesh screen on bucket (interceptors)
T	Threaded outlet
-TE	2” extension (F1510 Series)
-TL	Tile recess in lid (interceptors)
-U	Underdeck clamp
-U3	Underdeck clamp with cutaway side
-V	Fixed extension (2”, 3”, 4”)
-VG	Galvanized fixed extension (2”, 3”, 4”)
-W	Adjustable water dam
-WC	Wall clamp (hydrants)
-W-1	Water proofing flange
-W2	2” internal water dam
-W3	3” internal water dam
-W4	4” internal water dam
X	Inside caulk outlet
-X	Invert extension “C” dimension (F1560)
-XH	Extra heavy duty ductile iron grates (1 1/2” x 12” x 12”)
-Y	Non adjustable top (area drains)
-Z	Extended wide elastomeric flange on top
-Z	Add per each foot over 3’ of upright (carriers)

Design and dimensions are subject to modification. Prices do not include applicable taxes. Visit **www.mifab.com** for the most recent product information.
MIFAB®, Inc., 1321 West 119th Street, Chicago, Illinois 60643-5109, USA Toll Free: 1-800-465-2736 • Fax: 1-773-341-3049
sales@mifab.com • Canada Toll Free: 1-800-387-3880
All sales subject to MIFAB’s® Terms & Warranties. Please refer to inside front cover.

LARGER C-PORT Display Part No. CPORT-POPDISPLAY	C-PORT Display (for counter tops) Part No. CPORT-DISPLAY	BEECO Display (for counter tops) Part No. BEECO-DISPLAY	MR-500 Display (for counter tops) Part No. MR-500-DISPLAY	MI-GARD Display (for counter tops) Part No. MI-GARD-DISPLAY	T300 POP Display Part No. T300-KIT* Display comes with product included.
Product for display sold separately.					Shallow Depth, 2 7/8", Trench Drain *Part number for each kit. For POP display, must order 3 kits.

GRATE LOAD CLASS DEFINITIONS

ANSI A112.21.1M Floor / Point Drain Load Classifications - in a static condition.		
	Light Duty	All grates having safe live load (as calculated in paragraph 6.1.6 of the ANSI Standard) under 2,000 lbs. (900 kg.) For pedestrian foot traffic only.
	Medium Duty	All grates having safe live load (as calculated in paragraph 6.1.6 of the ANSI Standard) between 2,000 lbs. (900 kg.) and 4,999 lbs. (2,250 kg.) For light pneumatic tire traffic only. Sidewalks and residential parking.
	Heavy Duty	All grates having safe live load (as calculated in paragraph 6.1.6 of the ANSI Standard) between 5,000 lbs. (2,250 kg.) and 7,499 lbs. (3,375 kg.) For Commercial Pneumatic tire traffic patterns and tractor trailers.
	Extra Heavy Duty	All grates having safe live load (as calculated in paragraph 6.1.6 of the ANSI Standard) between 7,500 lbs. (3,375 kg.) and 10,000 lbs. (4,500 kg.) For forklift traffic. Roads and Highways. H-20 Load Rated.
	Special Duty	All grates having safe live load (as calculated in paragraph 6.1.6 of the ANSI Standard) over 10,000 lbs. (4,500 kg.) For airport traffic.

DIN 19580 Linear / Trench Drain Load Classifications - in a static condition.		
	Load Class A	Light Duty Grate design load up to or exceeding 3,372 lbs per foot. (15 kn). For pedestrian foot traffic only.
	Load Class B	Medium Duty Grate design load of at least 28,100 lbs per foot. (125 kn). For light pneumatic tire traffic only. Sidewalks and residential parking.
	Load Class C	Heavy Duty Grate design load of at least 56,200 lbs per foot. (250 kn). Commercial Applications.
	Load Class D	Grate design load of at least 89,920 lbs per foot. (400 kn). For pneumatic forklift traffic. Extra Heavy Duty. Roads and Highways. H-20 Load Rated.
	Load Class E	Grate design load of at least 134,800 lbs per foot. (600 kn). For Commercial Solid tire traffic patterns, and impacts from steel struts or metal wheels (forklifts). Extreme Heavy Duty.
	Load Class F	Grate design load of at least 202,320 lbs per foot. (900 kn). For airport traffic.

TRANSPORTATION CLASSIFICATIONS

The American Association of State Highway and Transportation Officials' (AASHTO) "Standard Specification for Highway Bridges" defines H-20 loading as a two-axle truck with a maximum dual-wheel load of 16,000 lbs. **HS-20 loading is defined as a tractor truck with a tandem axle semitrailer with a dual- wheel load of 16,000 lbs.**
The FAA (Federal Aviation Administration) Advisory Circular AC 150/5320-6D describes aircraft loading as 100,000 lbs. placed over a 9" x 9" area.
The Americans with Disabilities Act (ADA) stipulates that the slot width be limited to 1/2" or less on gratings in walkways and elongated slots must be placed longitudinally so that they are perpendicular to the dominant direction of travel.
Heel Proof is defined as slots or perforations that are less than ¼" in width or diameter. The maximum safe live load is calculated by dividing the load at failure by two.

NOTES

Design and dimensions are subject to modification. Prices do not include applicable taxes. Visit **www.mifab.com** for the most recent product information.
MIFAB®, Inc., 1321 West 119th Street, Chicago, Illinois 60643-5109, USA
Toll Free: 1-800-465-2736 • Fax: 1-773-341-3049
sales@mifab.com • Canada Toll Free: 1-800-387-3880
All sales subject to MIFAB's® Terms & Warranties. Please refer to inside front cover.

DID YOU KNOW ?

MPB-2022-USA

MIFAB® OFFERS . . .

COMPLETE MIFAB® BINDER
(with all product booklets inside)
Lit # 001B

MPB-2022-USA
Lit # 067

NH-2022
Lit # 044

CLPB-2022
Lit # 048

BEECO-2022
Lit # 071

AD-2021-USA
Lit # 043

TSP-2022
Lit # 062

ROOFGUARD-2020
Lit # 058

HYDROMAX-2020
Lit # 082

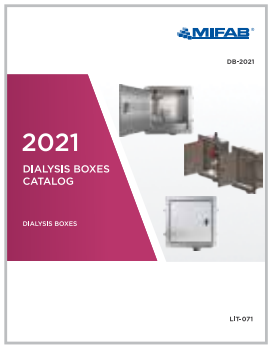

DB-2021
Lit # 070

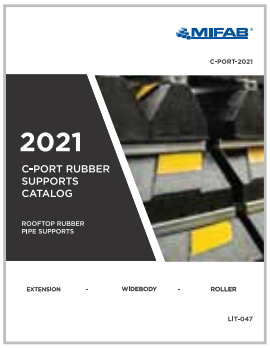

C-PORT-2021
Lit # 047

INT-2022
Lit # 095

TDSS-2022
Lit # 072

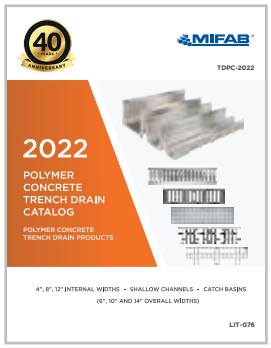

TDPC-2022
Lit # 076

TD-2022
Lit # 046

TDSD-2022
Lit # 077

Toll Free: 1-800-465-2736 • Fax: 1-773-341-3049
sales@mifab.com • Canada Toll Free: 1-800-387-3880
MIFAB®, Inc., 1321 West 119th Street, Chicago, Illinois 60643-5109, USA
All sales subject to MIFAB's® Terms & Warranties. Please refer to inside front cover.

40 - YEARS - ANNIVERSARY

MIFAB®

MPB-2022-USA

2022

MPB USA CATALOG

SPECIFICATION DRAINAGE PRODUCTS

LIT-067