VOL. 16 No. 2, pp. 33-68 AUGUST 1954

Philips Technical Review

DEALING WITH TECHNICAL PROBLEMS
RELATING TO THE PRODUCTS, PROCESSES AND INVESTIGATIONS OF
THE PHILIPS INDUSTRIES

EDITED BY THE RESEARCH LABORATORY OF N.V. PHILIPS' GLOEILAMPENFABRIEKEN, EINDHOVEN, NETHERLANDS

A UNIVERSAL APPARATUS FOR X-RAY THERAPY WITH MOVING FIELD IRRADIATION

by H. VERSE *).

621.386.1:615.849

Deep therapy with X-rays, that is, the treatment of tumours sited deep within the body, is one of the most difficult and least rewarding branches of medical practice. Attempts are continually being made to better the conditions in this phase of therapeutics by the application of new technical aids. The apparatus for moving field irradiation described in this article constitutes a further advance in this direction. Of course, the moving field irradiation technique, which with this unit is of quite general application, is by no means capable of effecting a cure in every case. Experience has shown however that with this technique the complicating subsidiary effects of the treatment can be largely eliminated, and that a higher percentage of cures in many kinds of cases can be obtained.

Deep therapy and moving field irradiation

A problem long associated with the X-ray treatment of lesions (tumours) sited deep within the body is that of administering a suitable dose of radiation to the morbid tissues without damaging the surrounding healthy tissues, especially those near the surface of the body. Considered superficially, this is apparently impossible when the irradiation is from an outside source; the dosage rate is always higher on the skin than in the lesion, owing to the usual decrease in radiation intensity with the square of the distance, and to the roughly exponential attenuation of the radiation with increasing depth of penetration. The ratio of the lesion dose to the skin dose can be increased considerably in two ways: firstly by decreasing the relative differences in distance by using a relatively long source-skin distance, or by "compressing" the patient; secondly by employing hard X-rays (high tube voltage and heavy filter) and so obtaining a more gradual decrease in the dose with increasing depth. However, the percentage values of the lesion dose/skin dose ratio, i.e. the *relative depth dose*, obtainable in this way do not exceed about 40% (when the lesion is 10 cm beneath the skin). Hence the success of the treatment depends entirely on how far the radiation *tolerance* of the healthy tissue exceeds that of the morbid tissue. Even if parts of the body outside the lesion suffer no permanent injury, the patient generally takes quite a long time to recover from the heavy load imposed on these parts.

The use of extremely hard radiation (equivalent tube voltage of several million volts) is more favourable from a physical point of view. Owing to the directional effect of the secondary X-rays and electrons generated within the body by the hard rays, a *dosage maximum* is produced below the surface of the body. The dosage maximum can be made to coincide with the site of the lesion.

There is another — long known and inherently simple — way of avoiding the above problem, that is, by irradiating the lesion from several directions (using normal tube voltages of 200 to 250 kV) and so rendering the skin dose innocuous. Multiple field irradiation, cross-fire irradiation and moving field irradiation [1]) (with a moving tube) function in this way.

The continual progress made during the last decade in the development of X-ray tubes and high tension shields, especially with regard to their

---

*) C. H. F. Müller A. G., Hamburg-Fuhlsbüttel.

[1]) See: G. F. Haenisch and H. Holthusen, Einführung in die Röntgenologie, G. Thieme, Stuttgart 1951.

decrease in size and weight, has led to an entirely new approach to the mechanical problem of moving field irradiation, under far more favourable conditions than before. In particular, these developments have widened the possibilities for a fuller exploitation of the advantages associated with a moving tube. With this in view, the X-ray works of C.H.F. Müller in Hamburg have produced a new constructional solution to the problem of moving field irradiation, namely, the TU 1 apparatus [2]) illustrated in *fig. 1*, which will now be described.

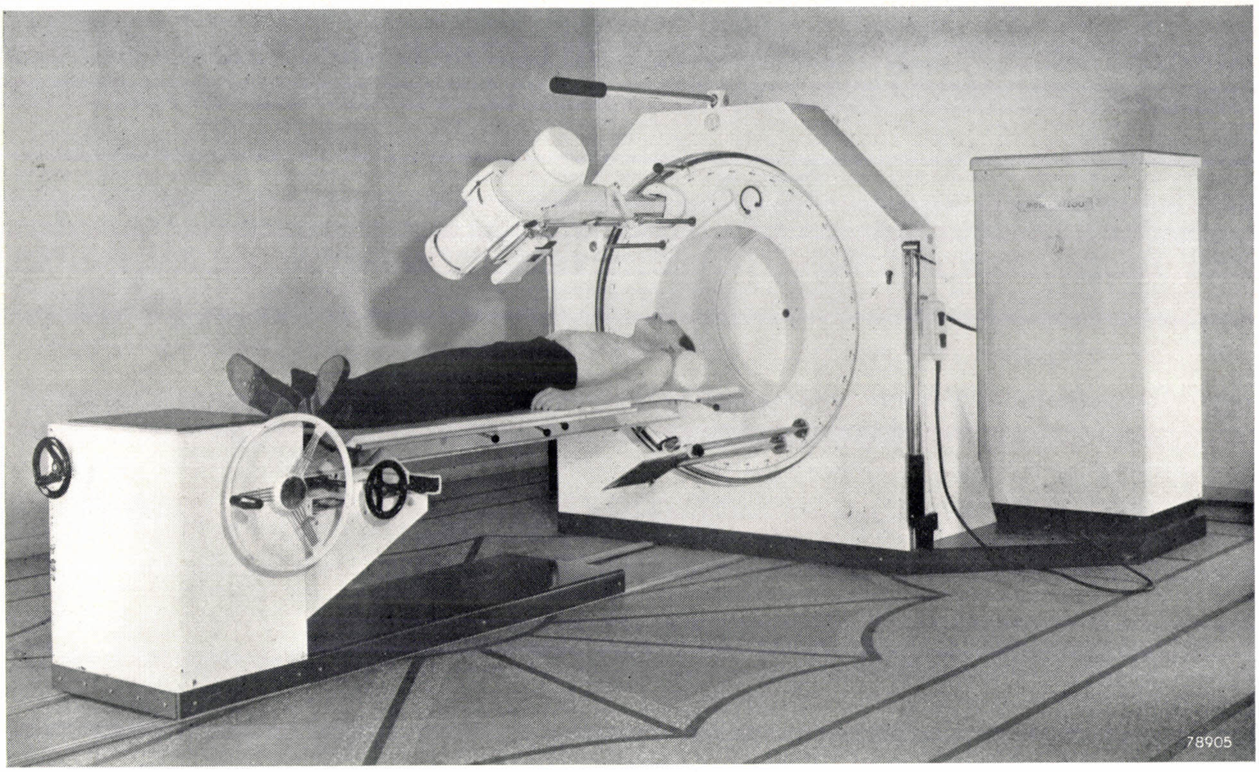

Fig. 1. View of the Müller TU 1 equipment for moving field X-ray irradiation. The treatment-table, running on rails, is seen on the left, the mounting for the X-ray tube and shield at the centre, and the H.T. generator (Müller RT 200) for the X-ray tube on the right of the photograph. The control desk is placed behind a lead glass screen in an adjoining room.

Principles of the design

Briefly, the principle of moving tube irradiation is that during irradiation the X-ray tube is moved in a specific path around the body of the patient, so that, while the cone of X-rays is always directed at the tumour, the region of entry of the rays moves continually from one area of skin to another.

There are many possibilities as regards the shape of the path and the geometrical details; the choice of these features is governed by medical requirements and by constructional limitations. The TU 1 is based on a *horizontal* positioning of the patient (see fig. 1) and a movement of the tube over a circular arc about his horizontal axis [3]). The design of this apparatus was considerably influenced, however by the fact that irradiation over a single circular arc is in some cases not sufficient. This is borne out by the following observations concerning the dosage distribution in the body during moving tube irradiation [4]).

---

[2]) H. Verse, Einige gerätetechnische Überlegungen zur Röntgenbewegungsbestrahlung, Fortschritte Röntgenstrahlen u. Röntgenpraxis **77**, 362-367, 1952.

[3]) According to a method evolved elsewhere, the patient is irradiated in a sitting position (R. Du Mesnil de Rochemont and H. Fiebelkorn, Strahlentherapie **88**, 198-205, 1952). The X-ray tube is then fixed and the patient is rotated about a vertical axis with the aid of a revolving chair during irradiation. We prefer a horizontal attitude of the patient in view of the combination of rotational and traversing movements used. Indeed, to produce the desired concentration of X-rays at precisely the correct point in the body, such a combination of movements can hardly be achieved in any other way than with the patient horizontal and completely immobilized. Moreover, this position is of course more suitable for patients who are gravely ill.

[4]) The data here employed are derived mainly from the investigations of Howard Nielsen; see his book: Rotations Bestraaling, Munksgaard, Copenhagen 1948, and the publication: Rotary Irradiation, Acta Radiol. **37**, 318-328, 1952.

Fig. 2a shows the computed dosage distribution in a cylindrical paraffin-wax phantom 30 cm in diameter irradiated with a stationary tube focus. If no filter is placed in the path of radiation, the dosage at the centre of the cylindrical body, that is, 15 cm beneath the "skin", is only 11% of the surface dose [5]). When the focus is moved so that it describes a full circle about the phantom, "isodose" curves of radial symmetry are obtained (fig. 2*e*). The centre dose is then 280% of that at every point on the surface of the cylinder; this demonstrates the great advantage of moving tube, compared with stationary tube irradiation. In some cases, however, it is neither feasible nor useful to move the tube through the whole 360° angle about the patient: not feasible if a particular region of this angular field includes extremely sensitive organs which must not come within range of the X-ray beam, and not useful if the rays in passing through a particular angular region must penetrate heavy bones and thus undergo considerable attenuation before reaching the tumour. The isodoses produced in the above phantom when the tube movement is restricted to particular arcs of the circle are shown in figures 2*b*, *c* and *d*. The relative dosage distributions along the diameter of the phantom which passes through the dosage maximum are shown in *fig. 3* for all these cases. It will be seen that the relative depth dose decreases appreciably as the angle of rotation is made smaller; instead of 280%, it is only 130% at the dosage maximum when the angle of rotation is 90°. (The patient is of course so positioned that the dosage maximum lies in the tumour. It may well happen that the disposition of the tumour and the portion of the skin used as a port of entry are such that the pivoting point of the required circular tube movement is not on the axis of the

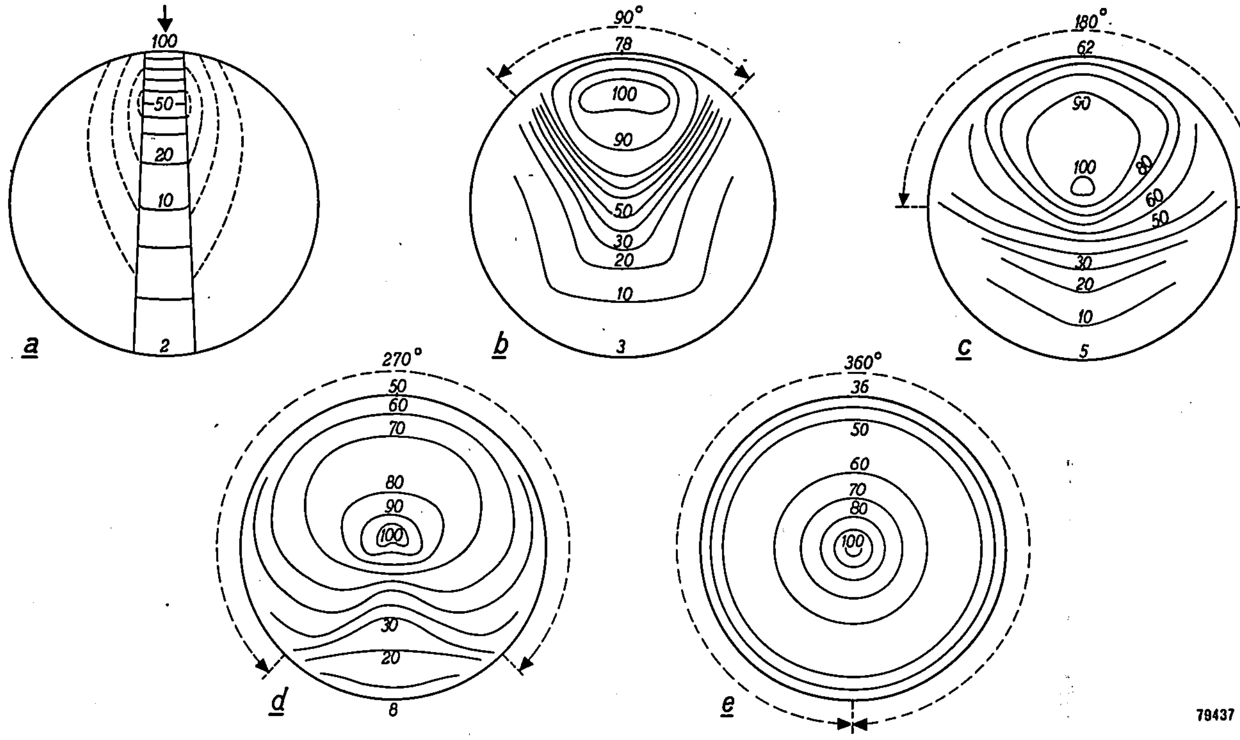

Fig. 2. Isodoses in a cylindrical phantom of paraffin wax 30 cm in diameter, when a field 5 cm wide and 15 cm along the axis of the cylinder is irradiated at a focus-lesion distance of 50 cm, by radiation of half-value thickness 0.7 mm Cu (reproduced from page 47 of the book by H. Nielsen referred to in note [4])).
a) Stationary tube irradiation. The envelope of scattered radiation around the direct X-ray beam is indicated by dotted lines. The lesion dose is 11% of the surface dose.
b) Rotation of X-ray tube through an angle of 90° about the axis of the cylinder. The dosage maximum (100%) is now within the body.
c) Angle of rotation 180°.
d) Angle of rotation 270°
e) Angle of rotation 360°. The isodoses here become concentric circles. The dosage maximum is at the axis of the cylinder; the skin dose is everywhere only 36% of the dosage maximum.

---

[5]) The relative depth dose mentioned at the beginning of this article, viz. 40% at a depth of 10 cm, applies to the irradiation of a large field with the aid of a heavy filter, this being the method usually employed in normal deep therapy to increase the depth dose; such filtration naturally necessitates the use of a far more powerful X-ray tube.

patient. As a consequence the dosage distribution may differ considerably from those of fig. 2. This does not affect the qualitative validity of the argument however.)

Thorough investigations have demonstrated [6]) that it is impossible to improve matters either by increasing the focus-skin distance or by using harder rays (employing a filter). A very considerable relative depth dose, however, can still be obtained with a comparatively small angular rotation, if the region of entry of the rays is made to describe *a number* of parallel bands on the skin of the patient, the cone of X-rays being always directed at the same point in the tumour throughout the process (see *fig. 4*). This is termed convergent irradiation. To accomplish it the tube must of course perform in addition another kind of movement such that the rotation about the patient takes place in a succession of different planes.

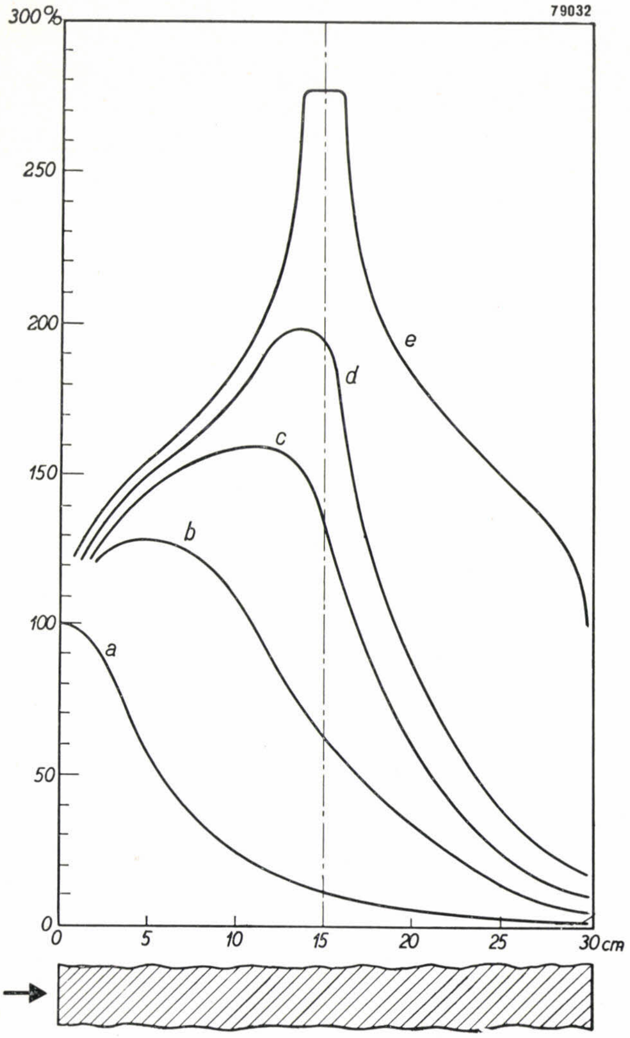

Fig. 3. Dosage distribution along the diameter running through the dosage maximum, of the cylindrical paraffin wax phantom shown in figures 2*a* to 2*e* inclusive. The arrow indicates the direction of the X-rays.

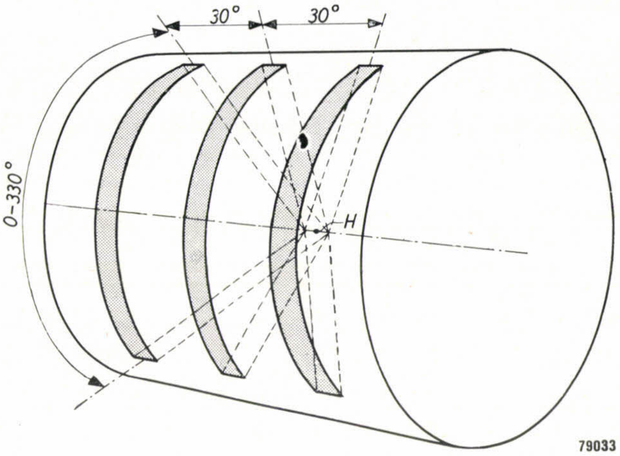

Fig. 4. Convergent irradiation of the cylindrical phantom. The port of entry of the X-ray beam describes parallel bands on the surface of the skin. The cone of rays remains always directed at the lesion *H*.

Such a spatial movement can be obtained in several ways; in the TU 1 it is done by imparting to the X-ray tube a traverse at right-angles to the rotation, which can be controlled independently of the latter. The advantages associated with the above solution and the manner of its application in the practical design will become apparent from the description of the apparatus given below.

Design of the irradiation apparatus

The X-ray generator used in the irradiation apparatus TU 1 is the standard Müller "RT 200" deep therapy unit, the X-ray tube of which is housed in an oil-filled shield. The Philips "250/25" deep therapy unit can be used as an alternative.

Rotational movement

The irradiation apparatus comprises a vertical disc in a fixed frame, mounted so that the disc can be rotated about its axis by an electric motor (*fig. 5*). Mounted near the periphery of the disc is a horizontal arm, to which the X-ray tube is attached in such a way that the X-ray beam emitted is directed towards the axis of the disc. The high tension cables and the oil ducts of the cooling system pass through the (hollow) arm to the shield of the X-ray tube. Since the tubes of both the Müller RT 200 and the Philips 250/25 units mentioned above use a D.C. voltage supply (maximum tube voltages 200 and 250 kV respectively), relatively thin, flexible H.T.

---

[6]) R. Du Mesnil de Rochemont, Die Dosierungsgrundlagen der Rotationsbestrahlung, Strahlentherapie **60**, 648-674, 1937. M. Nakaidzumi and A. Miyakawa, Über die räumliche Dosisverteilung der Röntgenstrahlen bei der Rotationsbestrahlung, Strahlentherapie **66**, 583-592, 1939.

cables are employed; hence there are no difficulties when the tube is moved.

To enable the patient to be so positioned in the cone of rays that the lesion is at the correct place (that is, in the region of the dosage maximum), the apparatus is equipped with a special treatment-table which runs on rails set in the floor parallel to the axis of the rotating disc; the table top, on which the patient lies, can be adjusted vertically and laterally.

The diameter of the circular path described by the focus of the X-ray tube is 1 metre; hence the focus is (at most) 50 cm from the lesion and, on an average, 30 to 40 cm from the skin of the patient.

In order that the tube shall not strike the table during the rotational movement, the table top is divided into several interchangeable plates one of which, to be placed in the appropriate position, is cut away to allow the tube to pass (see fig. 1).

Two end contacts (fig. 5, E_1, E_2), which can be positioned round the rotary disc, are used to vary the angle of rotation; as soon as either of these contacts touches a corresponding fixed contact on the frame, the direction of rotation of the electric motor driving the disc is reversed. The maximum angular range is 330 °; the angle of 30° not covered includes the heavy iron table girder used to ensure perfect positional stability of the patient.

The rotational movement takes place at a rate of 6° per second.

Traversing movement

The traverse of the X-ray tube is achieved by a movement of the arm (*T* in fig. 5) parallel to the axis of the disc in a bush (*B*). This movement is actuated by a second electric motor. Unlike the rotational drive which is mounted on the fixed frame of the apparatus and actuates the disc through a simple chain transmission, the traversing drive is mounted on the rear face of the rotary disc (*fig. 6*) and is connected electrically via a flexible cable to the control desk from which the movement is controlled. To produce the traversing movement of the X-ray tube, a screwed collet mounted in bearings on the disc, and driven by the motor, propels a threaded shaft attached to the tube shield. At the same time another threaded shaft, moving in the same direction as the first but more slowly, acts upon a lever mechanism which changes the position

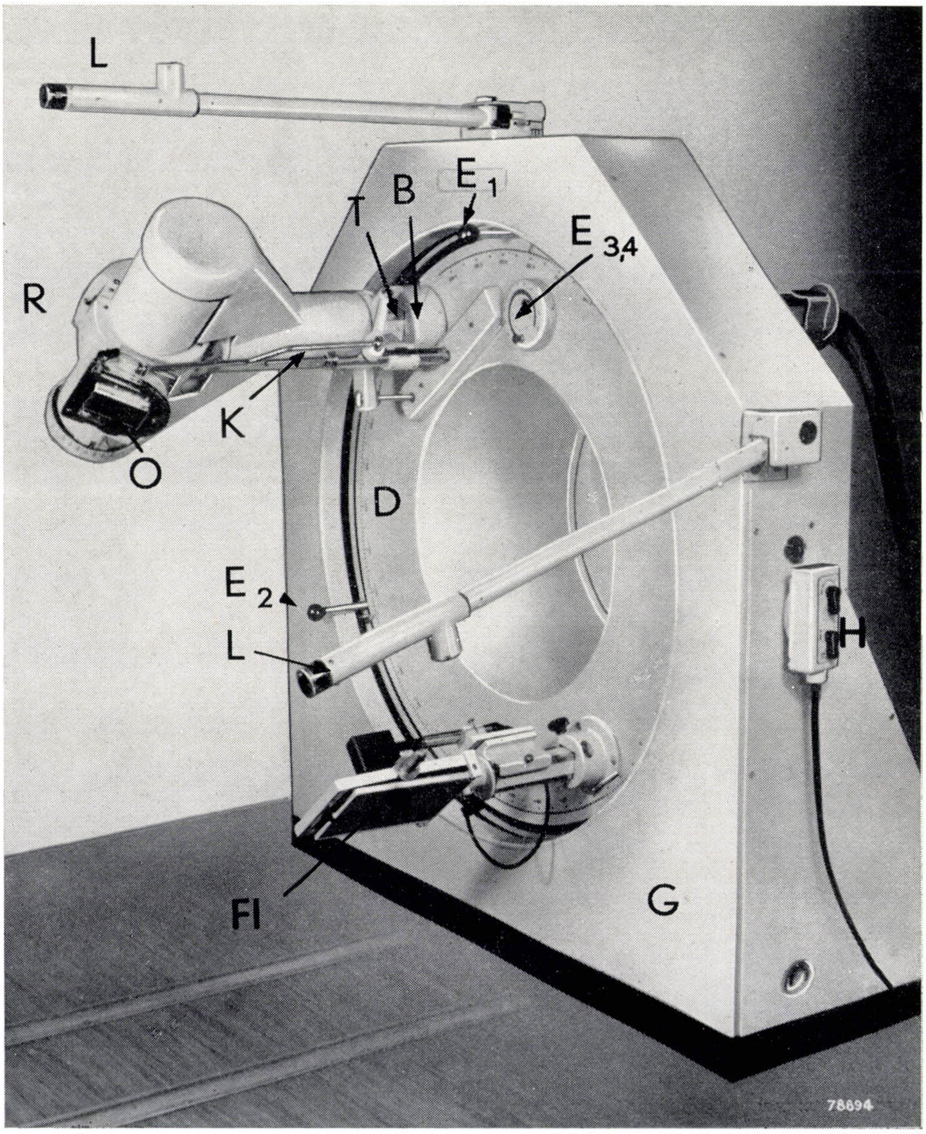

Fig. 5. Mounting for the X-ray tube. *G* fixed frame, *D* rotary disc in peripheral roller-bearing on frame, *T* arm carrying X-ray tube, *R* X-ray tube with shield and beam aperture *O*, *K* coupling rod, *B* bush in which arm *T* moves. E_1, E_2 end contacts for rotation, E_3, E_4 adjusting knobs for end contacts of traverse, *H* hand switch, *Fl* fluorescent screen, *L* two of the sources of the light beams described later. (The arrangement of the beam aperture of the apparatus shown in fig. 1 differs in some respects from that of the latest model shown here.)

of the beam aperture in the tube shield (see fig. 5 and *fig. 7*). The pitches of the two threads are such that their relative speeds maintain the projected cone of X-rays always directed at a given point on the axis of the disc.

The range of traverse is controlled with the aid of two end contacts, these being adjusted by means of two knobs attached to the front face of the disc (see *fig. 8*, which also shows other features of the design). The maximum traverse obtainable is 60 cm; this requires a corresponding rotation of the beam aperture of the tube through an angle of 60°. To treat an elongated, say, a more or less cylindrical lesion, different sections of which are to be exposed successively to rotational irradiation, the coupling rod can be removed from the lever mechanism; the X-ray beam then remains aligned in the same direction throughout the traversing movement of the tube.

This rod is likewise uncoupled when the apparatus is to be used for stationary tube irradiation (sometimes combined with compression, which is of course neither practicable nor necessary in the case of rotational irradiation). When uncoupled, the direction of the beam can be adjusted through an arc of 120°.

The normal speed of the traverse is 2/3 cm per second; hence the tube takes 90 seconds to travel from one end of the traverse to the other.

Apart from convergent irradiation along parallel bands, the TU 1 apparatus can be used for irradiation of another kind, which may be termed *oscillatory convergent irradiation* 7). In this process, the to-and-fro rotational movement of the tube takes place *simultaneously* with a gradual traversing movement at 1/6 of the normal speed referred to in the above; hence the port of entry of the X-rays describes on the skin a zig-zag pattern, as shown in *fig. 9*. It is seen that by virtue of this gradual traverse the coverage is almost completely uniform over the entire area of skin available for the entry of X-rays. Hence this method of irradiation is particularly valuable as a means of effecting adequate distribution of the total skin dose, even in cases where, for medical reasons, the angular range of the rotation is

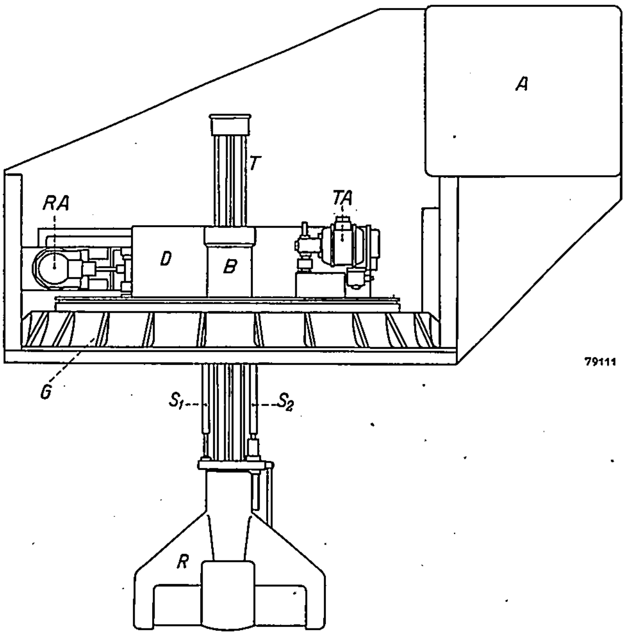

Fig. 6. Top view of main frame and X-ray tube mount with cover plates removed, G fixed frame, mounted on the same base as the H.T. generator *A*. *RA* motor unit for rotation, *TA* motor unit for traverse, mounted on rotary disc. S_1, S_2 threaded shafts, other letters as in fig. 5.

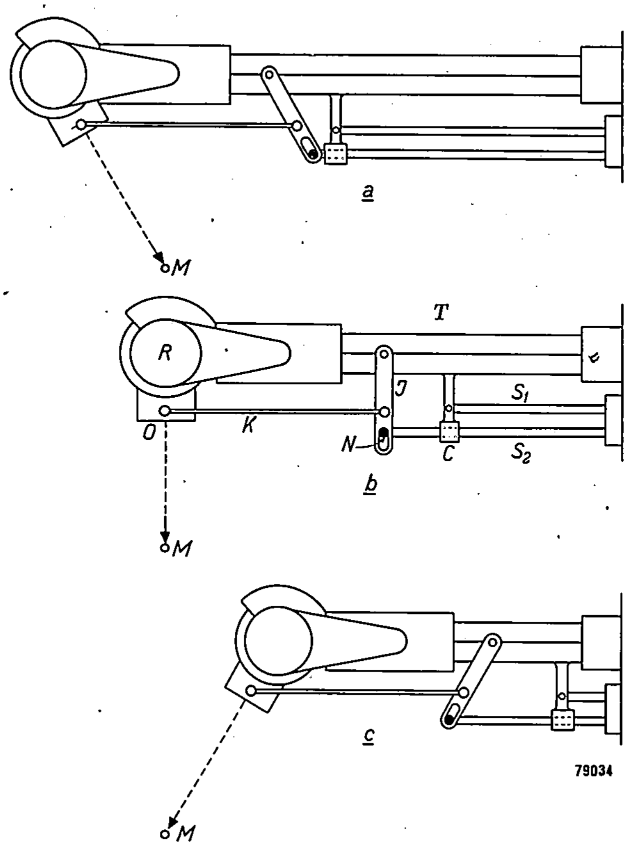

Fig. 7. Mechanism for aligning X-ray beam during traversing movement of X-ray tube *R*. The screwed shaft S_1 (here shown slightly displaced for clarity) is connected to carrier arm *T* and actuates the traverse. The threaded shaft S_2, which moves in slide bearing *C* and is moved more slowly but in the same direction as S_1, governs the position of lever *J* through a pin *N*. This lever (via the coupling rod *K*) moves the beam aperture *O* in the tube-shield through an angle (here shown in the centre and in the two extreme positions of the traversing movement, *a*, *b*, *c*). The central ray of the beam is thus always maintained in alignment with a fixed point *M*, unless coupling rod *K* is removed.

---

7) H. Wichmann, Physikalisch-technische Bemerkungen zur Bewegungsbestrahlung, Röntgenstrahlen — Geschichte u. Gegenwart (published by C. H. F. Müller A, G.) **3**, 72-79, 1953.

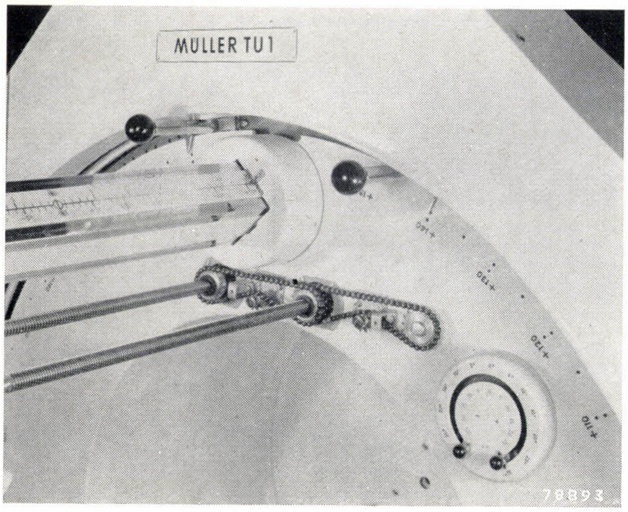

Fig. 8. Close-up of part of the rotary disc. The arm carrying the X-ray tube is seen on the left; beneath it are the two screwed collets, mounted in bearings on the disc and driven by a chain transmission, and the two threaded shafts. The two end contacts for the rotation are seen at the top, and the adjusting knobs for the traverse end contacts in the bottom right-hand corner.

restricted. If the full traversing range of 60 cm is used, the time required for complete irradiation by this method is 9 min. The dose accumulated in this period is sufficient for most cases occurring in practical X-ray therapy.

Preparations and procedure for an irradiation treatment

Positioning of the patient

The first task in preparing for the treatment is to position the patient correctly, so that the lesion (or other anatomically defined site within the body) will be at the pivoting point of the tube movement. Since this pivoting point is on the axis of the rotating disc and is thus fixed in relation to the frame of the apparatus (it is here assumed that the coupling rod K of the lever mechanism shown in fig. 7 is in position), it can be indicated in space with the aid of a system of light beams, fixed in relation to the frame. The light-beams are provided by three light sources carried by hinged arms attached to the frame. A fourth light beam coinciding exactly with the axis of rotation, is produced by a projector at the centre of the rotating disc (*fig. 10*). By moving the table with the patient upon it towards or away from the disc, and adjusting the table top vertically and laterally, all these light-beams are brought to bear upon marks previously made on the skin of the patient. Correct positioning of the patient is thus ensured. A fifth light source can be mounted on the beam aperture of the X-ray tube to supply a light-beam to coincide with the central ray of the X-ray cone. Provided that the patient is correctly aligned, this light beam will always point exactly at the lesion. The three arms referred to above are provided with safety switches which, in the event of excessive deformation of any one of them, switch off all the light sources and thus prevent incorrect positioning of the patient.

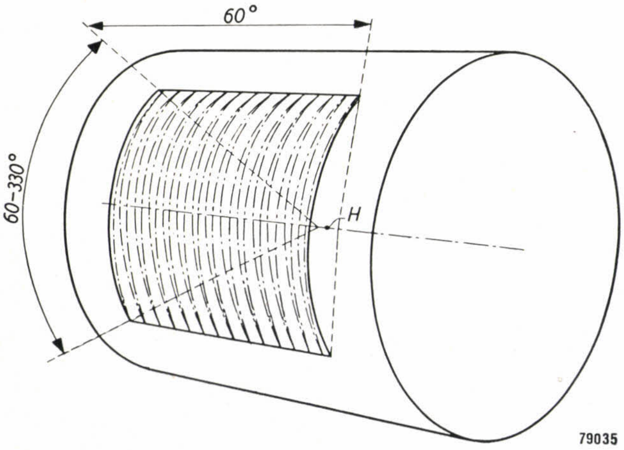

Fig. 9. Zig-zag pattern described by the port of entry of therays on the skin of a patient undergoing oscillatory convergent irradiation. The beam is maintained in constant alignment mith point H.

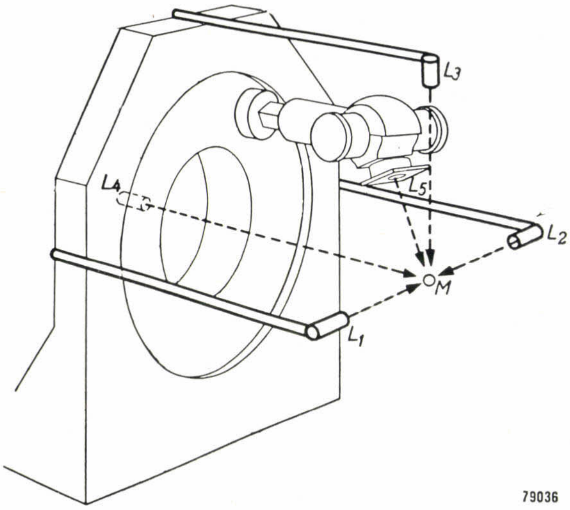

Fig. 10. Method of positioning the patient with the aid of light-beams L_1-L_4. A light source fitted to the beam aperture of the X-ray tube produces the light beam L_5, which coincides with the central ray of the X-ray beam subsequently emitted. The lesion (or other specific point in the body of the patient) should be positioned at the point of intersection M of all these light beams.

The position of the patient can be checked immediately before irradiation with the aid of a small fluorescent screen attached to the rotating disc at a point directly opposite the X-ray tube. Provision for fluoroscopic examination while the beam is vertical (frequently desirable in the case of a recumbent patient) is made by placing the iron supporting girder off-centre beneath the table, as shown in *fig. 11*. This diagram also shows the different margins of adjustment allowed for positioning the patient. To give as much clearance as possible for moving the patient along the axis of rotation, the centre portion of the rotating disc is deeply recessed (see figures 1 and 5).

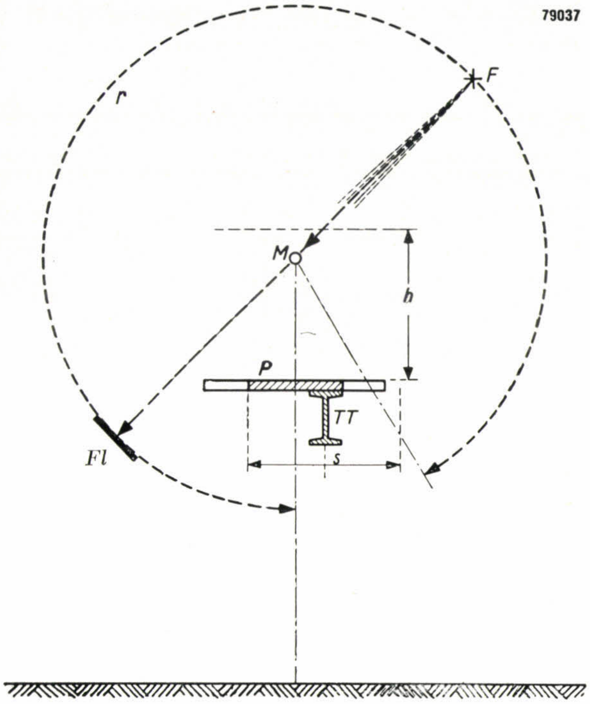

Fig. 11. The top plate *P* of the treatment-table can be moved vertically through a distance *h* and laterally over a distance *s*. *F* is the focus of the X-ray tube and *Fl* the fluorescent screen opposite the tube, with the aid of which the patient can be screen-tested in any position within the angular range *r* of the rotational movement. The iron girder *TT* of the table is placed off-centre to permit the use of the fluorescent screen whilst the X-ray beam is vertical.

Control and limitation of the movement

Since the apparatus is equipped with two separate motor units for the rotational and traversing movements, both of which can be controlled independently through a system of relays, a great diversity of movements can be made to take place automatically. To ensure the utmost simplicity and clarity in operation, only three of the many possibilities have been selected; these correspond to the methods of stationary tube irradiation, rotational irradiation and oscillatory convergent irradiation as outlined above. Experience has shown that most of the cases occurring in practice can be covered by these three methods; moreover, these methods are precisely those for which the most complete therapeutic experience and dosage data are available.

The movement of the tube during irradiation is governed by a controller (*fig. 12*) mounted on a desk, placed behind a screen of lead glass outside the irradiation room. The three positions of the selector seen at the top of the controller correspond to the three methods of irradiation mentioned above. When stationary tube irradiation is selected, all the mechanisms for the various movements of the X-ray tube are locked, and the only remaining control is to switch on the radiation for the required period at the control desk. When the selector is turned to the position for rotational irradiation, the tube starts its movement automatically as soon as the H.T. is switched on at the control desk, and continues to travel to and fro between the two pre-adjusted end contacts until the expiry of the period set by the time switch of the apparatus. The tube then stops and the tube voltage is switched off. If several parallel bands are to be irradiated, the master switch seen in fig. 12 below the method selector can now be used to shift the tube in the direction of traverse to the next irradiation band. Provided that the end contact for the traverse is pre-set to the required distance the tube may be allowed to proceed to the contact, its arrival there being indicated by a signal lamp; the rotational irradiation described in the above can then be repeated. On completion of this process, the master switch is turned to the other position and the tube then proceeds to the oppositie pre-set end contact of the traverse; when the signal lamp indicates that

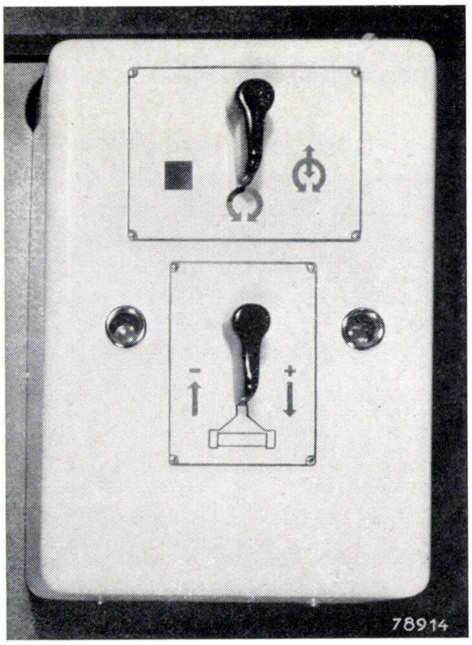

Fig. 12. Controller for automatic moving field irradiation. The selector for the three methods of irradiation is seen above, and the master switch for the traversing movement below.

this contact has been reached, the third band is irradiated [8]). A locking mechanism is provided as a safeguard against accidental manipulation of the master switch during the rotational movement. To prevent accidental incorrect irradiation of the patient, this motion is governed by a centrifugal switch on the appropriate electric motor; no H.T. can be applied to the X-ray tube, and hence no radiation can be produced, unless the motor is running. Should one of the end contacts, or one of the associated change-over relays for the motor fail to operate, the entire apparatus is put out of action automatically by special safety end contacts so that the patient cannot be harmed, or the apparatus damaged by such failure.

Finally, let us consider the third position of the selector, that is, oscillatory convergent irradiation. When this method is selected the speed of the traverse motor is reduced by a switch-over to 1/6 of the normal speed. As soon as the tube voltage is switched on, the tube starts its combined traversing and reciprocating movement. The time switch of the X-ray apparatus is set to the exact time required to cover the range of traverse between the particular positions of the end contacts; hence the radiation and the movement of the tube are switched off simultaneously as soon as the tube completes this movement. The traversing movement is also governed by a centrifugal switch on the motor and by safety end contacts in the manner described above for the rotational movement.

With the patient correctly positioned, the end contacts limiting the movement of the tube are adjusted, using a hand switch (*H* in fig. 5) to move the tube. Removing this hand switch from its hook automatically locks the tube voltage switch and thus safeguards the operator performing the adjustment against accidental exposure to X-radiation. The X-ray tube can be shifted at will in the directions of rotation and traverse by means of two levers on the hand switch. The tube positions corresponding to the limits of the desired movement can be located quite simply with the aid of the light-beam concident with the direction of the X-rays, and the end contacts can then be set to these positions. In critical cases the entire pattern of the irradiation can be checked before it is administered, using the hand switch.

On completion of these preparations, the arms carrying the light-pointers are swung back to the frame, the light source is removed from the beam aperture and a lead diaphragm is inserted in its place in the holder. Initially this diaphragm leaves an aperture corresponding to the size of the flourescent screen used for the preliminary fluoroscopic check. Before irradiation is actually started, however, the diaphragm is pushed further into the holder so that it limits the cone of X-rays to the cross-section corresponding to the size of the lesion to be treated. If necessary a filter can be inserted in a holder in front of the diaphragm (as already mentioned, it is in principle unnecessary to use a heavy filter in moving field irradiation). The patient is then left alone in the irradiation room and the pattern of irradiation is regulated from the adjoining control room in the manner described.

We shall finally refer very briefly to a problem which is extremely important in this and every other method of deep therapy, viz. the determination of the lesion dose. In general, the lesion dose is measured with the aid of small ionization chambers, placed either in the immediate vicinity of the lesion during irradiation or in an equivalent position in a phantom previously exposed to a trial irradiation. In the case of rotational irradiation involving an almost completely circular movement of the X-ray tube it is possible to employ a simpler procedure, which consists in measuring simultaneously the dosage rate of the tube and the dose transmitted through the patient [9]). The dosage rate of the tube is measured continuously by means of a large, flat ionization chamber, mounted between the filter holder and the diaphragm holder on the beam aperture in the shield (*fig. 13*), and connected to an indicating instrument on the control desk; the transmitted dose is determined by an integrating measurement with a sensitive ionization chamber mounted in the central ray of the X-ray beam behind the patient, on a movable mount attached

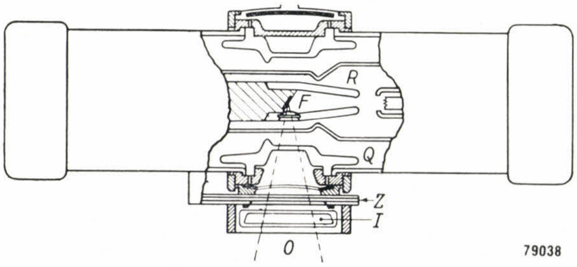

Fig. 13. X-ray tube *R* and shield with built-in ionization chamber *I* for measuring the dosage rate of the tube. *F* focus, *O* beam aperture, *Z* filter mount, *Q* oil-bath for insulation and cooling.

---

[8]) The simple method of construction described here is of course possible only by reason of the fact that no more than three irradiation bands are employed, the middle band being irradiated first.

[9]) W. Neumann and F. Wachsmann, Strahlentherapie **71**, 438-449, 1942.

to the fluorescent screen holder (see fig. 5). Although this method, as already noted, is applicable only to angles of rotation in the region of 360°, a new method has recently been developed whereby the dose absorbed by the lesion can be determined for other angles of rotation, however small, without the aid of phantom tests [10]).

Conclusion

In conclusion it may be worth mentioning once again the great scope in the choice of movement available to the user of the TU 1. This is primarily attributable to the fact that the apparatus is equipped with two separate, electrically controlled units, one for each of the two degrees of freedom of movement. This arrangement provides a method that is in a high degree automatic and largely foolproof against possible errors, without appreciable curtailment of the therapeutic possibilities. In fact there is every reason to suppose from the experience gained so far, that this apparatus gives a general solution to the problems associated with normal X-ray deep therapy.

Summary. During X-irradiation of deep sited lesions in the body, the harmful effects of the rays upon adjacent organs and in particular upon the areas of skin exposed to the rays, can be obviated by moving the X-ray tube around the patient in a suitable manner during the process of irradiation. Owing to the relatively small size and weight of modern X-ray therapy units, this movement can now be made to take place automatically. The Müller TU 1 apparatus is designed for this purpose. Here the X-ray tube is capable of rotation about the horizontal patient, and can perform a traversing movement parallel to his longitudinal axis. Separate motors are used to actuate the two movements. Control of the motors is such that a very wide variety of motions can be accomplished automatically. In the TU 1 apparatus three automatically controlled methods of irradiation are provided, i.e. stationary tube, rotational and oscillatory convergent irradiation. This article includes a description of the equipment and a brief account of the provisions made to ensure correct positioning of the patient and to limit the movement of the tube to the desired range.

---

[10]) H. Wichmann, Tabellen zur Dosierung bei Bewegungsbestrahlung, to be published shortly.